This is a digital copy of a book that was preserved for generations on library shelves before it was carefully scanned by Google as part of a project to make the world's books discoverable online.

It has survived long enough for the copyright to expire and the book to enter the public domain. A public domain book is one that was never subject to copyright or whose legal copyright term has expired. Whether a book is in the public domain may vary country to country. Public domain books are our gateways to the past, representing a wealth of history, culture and knowledge that's often difficult to discover.

Marks, notations and other marginalia present in the original volume will appear in this file - a reminder of this book's long journey from the publisher to a library and finally to you.

Usage guidelines

Google is proud to partner with libraries to digitize public domain materials and make them widely accessible. Public domain books belong to the public and we are merely their custodians. Nevertheless, this work is expensive, so in order to keep providing this resource, we have taken steps to prevent abuse by commercial parties, including placing technical restrictions on automated querying.

We also ask that you:

+ *Make non-commercial use of the files* We designed Google Book Search for use by individuals, and we request that you use these files for personal, non-commercial purposes.

+ *Refrain from automated querying* Do not send automated queries of any sort to Google's system: If you are conducting research on machine translation, optical character recognition or other areas where access to a large amount of text is helpful, please contact us. We encourage the use of public domain materials for these purposes and may be able to help.

+ *Maintain attribution* The Google "watermark" you see on each file is essential for informing people about this project and helping them find additional materials through Google Book Search. Please do not remove it.

+ *Keep it legal* Whatever your use, remember that you are responsible for ensuring that what you are doing is legal. Do not assume that just because we believe a book is in the public domain for users in the United States, that the work is also in the public domain for users in other countries. Whether a book is still in copyright varies from country to country, and we can't offer guidance on whether any specific use of any specific book is allowed. Please do not assume that a book's appearance in Google Book Search means it can be used in any manner anywhere in the world. Copyright infringement liability can be quite severe.

About Google Book Search

Google's mission is to organize the world's information and to make it universally accessible and useful. Google Book Search helps readers discover the world's books while helping authors and publishers reach new audiences. You can search through the full text of this book on the web at `http://books.google.com/`

Stanford University Libraries
3 6105 127 787 005

INDEX

TO THE

EXECUTIVE DOCUMENTS,

PRINTED BY ORDER OF THE

SENATE OF THE UNITED STATES

FOR THE

SECOND SESSION OF THE THIRTY-SIXTH CONGRESS;

AND OF

THE SPECIAL SESSION.

1860-61.

IN NINE VOLUMES.

Volume 1 contains No. 1 part 1.
Volume 2 contains No. 1 part 2.
Volume 3 contains No. 1 part 3.
Volume 4 contains No. 2 to 13, with Nos. 1 and 2 of special session, except Nos. 6, 7, and 9.
Volume 5 contains No. 7 part 1.
Volume 6 contains No. 7 part 2.
Volume 7 contains No. 9.
Volume 8 contains Report on Commerce and Navigation.
Volume 9 contains No. 6 in quarto.

WASHINGTON:
GEORGE W. BOWMAN, PRINTER.
1861.

91611

INDEX

TO

THE EXECUTIVE DOCUMENTS

OF

THE SENATE OF THE UNITED STATES.

Subject.	Vol.	No.	Page.
A.			
Academy at West Point, New York. Report of the Board of Visitors at the United States Military	2	1	274
Academy at Annapolis, Maryland. Report of the Board of Officers appointed to witness the examination of the acting midshipmen, &c., at the Naval	3	1	27
Adjutant General of the Army, on the operations of the army during the year 1860. Annual report of the	2	1	18
African slave trade. (See *Slave Trade.*)			
Agricultural Bureau. Remarks of the Secretary of the Interior in relation to the operations of the	1	1	39
Almanac for the year 1860. Report of the condition and progress of the American Ephemeris and Nautical	3	1	223
American vessels. (See *Vessels.*)			
Anderson, a man of color, and fugitive from justice, who fled from the State of Missouri to Canada. Correspondence relating to the extradition of John, *alias* "Jack,"	4	11	1
Appropriations, expenditures, and balances. Comptroller's annual statement of	3	1	405
Appropriations for the Navy Department under the act of May 1, 1820, for the year ending June 30, 1860. Statement of	3	1	406
Argentine Confederation. (See *Commerce and Navigation—Commercial Relations.*)			
Armament of each of the steam screw ships of the Navy. Statement of the cost of	4	4	29
Armory at Springfield in 1860. Report of the operations of the United States	2	1	970
Armory at Harper's Ferry in 1860. Report of the operations of the United States	2	1	972
Arms, &c., among the several States for the years 1860, under acts of 1808 and 1835. Statement exhibiting the apportionment of	2	1	967
Army department of the West for 1860. Report of the operations of the	2	1	13 193
Army department of Texas for 1860. Report of the operations of the	2	1	18 193
Army department of New Mexico for 1860. Report of the operations of the	2	1	51 199
Army department of Utah for 1860. Report of the operations of the	2	1	69 205
Army department of California for 1860. Report of the operations of the	2	1	107 206

Subject.	Vol.	No.	Page.
Army department of Oregon for 1860. Report of the operations of the	2	1	117 to 207
Army during the year 1860. Annual report of the Adjutant General on the operations of the	2	1	189
Army of the United States on June 30, 1860. Statement exhibiting the organization and actual strength of the regular	2	1	208 to 210
Army departments of the East, the West, Texas, New Mexico, Utah, Oregon, and California, on June 30, 1860. Statements of the position and distribution of the troops in the	2	1	214
Army from July 1, 1859, to June 30, 1860. Statement of the whole number of recruits enlisted in the	2	1	230
Army for the fiscal year ending June 30, 1860. Annual report of the Quartermaster General of the	2	1	233
Army for 1860. Annual report of the Paymaster General of the	2	1	238
Army for 1860. Annual report of the Commissary General of the	2	1	237
Army for 1860. Annual report of the Surgeon General of the	2	1	241
Army pensions in the hands of each agent on June 30, 1860. Statement of the amount of funds for paying	1	1	478
Arsenal for 1860. Report of the operations at the Watervliet	2	1	975
Arsenal for 1860. Report of the operations at the Alleghany	2	1	977
Arsenal for 1860. Report of the operations at the Washington	2	1	979
Arsenal for 1860. Report of the operations at the Monroe	2	1	980
Arsenal for 1860. Report of the operations at the St. Louis	2	1	982
Arsenal for 1860. Report of the operations at the Frankfort	2	1	984
Arsenal for 1860. Report of the operations at the New York	2	1	985
Arsenal for 1860. Report of the operations at the Benicia	2	1	987
Arsenal for 1860. Report of the operations at the North Carolina	2	1	989
Arsenal for 1860. Report of the operations at the Watertown	2	1	990
Arsenal for 1860. Report of the operations at the Charleston	2	1	993
Arsenal for 1860. Report of the operations at the Texas	2	1	994
Arsenal for 1860. Report of the operations at the Mount Vernon	2	1	994
Arsenal for 1860. Report of the operations at the Baton Rouge	2	1	995
Arsenal site at Vancouver Depot. Report of the operations at the	2	1	996
Arts and manufactures for the year 1860, (Part I.) Annual report of the Commissioner of Patents in relation to	5	7	1
Arts and manufactures for the year 1860, (Part II,) being plates, illustrating inventions, &c. Annual report of the Commissioner of Patents in relation to	6	7	863
Astronomical expedition on the coast of Chili. Report of the progress made in the	3	1	49
Auditor of the Treasury for the Post Office Department for the fiscal year ending June 30, 1860, showing the revenue account of said department. Report of the	3	1	524
Austria and other continental powers of Europe. Views of the President on the relations between the United States and	1	1	18
Austria, commercial relations, &c. (See *Commercial Relations* and *Commerce and Navigation*.)			
Aves or Bird Island, claimed by Venezuela, adversely to the claim of the United States. Correspondence in relation to Shelton's *alias*	4	10	1
(*For list of documents accompanying the above see page 2 of same.*)			

B.

Behring's Straits Naval Expeditions. Reports of the North Pacific and	3	1	44 to 48
Belgian mails. (See *Mails*.)			
Belgium. Copy of the postal convention between the United States and the kingdom of	3	1	454
Belgium, commercial relations, &c. (See *Commercial Relations* and *Commerce and Navigation*.)			
Bird Island. (See *Aves Island*.)			
Bolivia. (See *Commercial Relations* and *Commerce and Navigation*.)			

Subject.	Vol.	No.	Page.
Boundary lines between the territories of the United States and Texas, and also the territories of the United States and California. Remarks of the Secretary of the Interior in relation to the survey of the	1	1	47
Brazil. Views of the President on the relations between the United States and	1	1	19
Brazil. (See *Commerce and Navigation* and *Commercial Relations*.)			
Bremen mails. (See *Mails*.)			
Bremen. Copy of the additional articles to the postal convention between the United States and the Hanseatic republic of	3	1	486 to 487
British mails. (See *Mails*.)			
British dominions. (See *Commercial Relations* and *Commerce and Navigation*.)			
Buildings, with a compendium of the same. Annual report of the Commissioner of Public	1	1	483
Bureau of Engineers for 1860. Annual report of the	2	1	253
Bureau of Yards and Docks for 1860. Report, with detailed estimates, &c., of the	3	1	55
Bureau of Ordnance and Hydrography for 1860. Report, with detailed estimates, &c., of the	3	1	206
Bureau of Construction, Equipment, and Repairs. Report, with detailed estimates, of the	3	1	230
Bureau of Provisions and Clothing. Report, with detailed estimates, of the	3	1	346
Bureau of Medicine and Surgery. Report, with detailed estimates, of the	3	1	371
C.			
California claims. Remarks of the President on the saving to the government of large amounts by the Attorney General's resistance to certain	1	1	27
Canal. Report in relation to the Atrato route of the interoceanic ship	2	1	297
Canal near the isthmus of Darien. Report of Lieutenant Michler of a survey for an interoceanic ship	7	9	1
Capitol extension in 1860. Report of Captain Franklin on the operations of the United States	2	1	172
Capitol dome in 1860. Report of Captain Franklin on the operations of the new	2	1	178
Carriers. (See *Post Office*.)			
Census. Remarks of the Secretary of the Interior in relation to the eighth	1	1	40
Census. Report of the Superintendent of the	1	1	501
Charleston, South Carolina. Correspondence between Mr. Black, Secretary of State, and the legations of Bremen, England, and Spain, in regard to foreign vessels in the port of	1	5	1
Charts to be prepared for engraving and printing, and the expenses to be incurred in the reduction of the results of the surveys, &c. Report, with a list in detail, of the	3	1	45
Chili. (See *Commerce and Navigation*.)			
Chili, of the progress made during the year, and the present condition, &c., of the work under his charge. Report of the expedition to	3	1	49
China. (See *Commercial Relations* and *Commerce and Navigation*.)			
China. Views of the President on the relations between the United States and the empire of	1	1	18
China. Report of the survey of the route from San Francisco to	3	1	50
Chiriqui surveying expedition. Report of the progress made in the	3	1	36
Circuit court. (See *Court*.)			
Clerks and watchmen at the naval stations, on board of vessels of war, &c. Statement of the number of	4	8	2
Clerks and other officers in the War Department during the year 1860. Report of the number of	4	12	2

Subject.	Vol.	No.	Page.
Coal beds in the Changanola river. Report on the location, quality, and quantity of coal in the	3	1	37 to 43
Coal for the use of steam vessels in the navy. Estimate of the quantity of	1	1	242
Coal for the navy for the year ending June 30, 1861. Statement of offers to furnish anthracite	3	1	243
Cod fisheries. (See *Fisheries.*)			
Columbia Institution for the Deaf and Dumb and the Blind for the District of Columbia. Report of the board of directors for the	1	1	552
Commerce and navigation of the United States with the British dominions, (Part II.) Statement of the	9	6	43
Commerce and navigation of the United States with the French dominions, (Part II.) Statement of the	9	6	82
Commerce and navigation of the United States with the Spanish dominions, (Part II.) Statement of the	9	6	95
Commerce and navigation of the United States with the Portuguese dominions, (Part II.) Statement of the	9	6	134
Commerce and navigation of the United States with Belgium, (Part II.) Statement of the	9	6	138
Commerce and navigation of the United States with the dominions of the Netherlands, (Part II.) Statement of the	9	6	141
Commerce and navigation of the United States with the Hanse Towns, (Part II.) Statement of the	9	6	148
Commerce and navigation of the United States with the Danish dominions, (Part II.) Statement of the	9	6	156
Commerce and navigation of the United States with Sweden and Norway, (Part II.) Statement of the	9	6	158
Commerce and navigation of the United States with Russia, (Part II.) Statement of the	8	6	159
Commerce and navigation of the United States with Prussia, (Part II.) Statement of the	9	6	160
Commerce and navigation of the United States with Austria, (Part II.) Statement of the	9	6	160
Commerce and navigation of the United States with Sardinia, (Part II.) Statement of the	9	6	162
Commerce and navigation of the United States with Tuscany, (Part II.) Statement of the	9	6	164
Commerce and navigation of the United States with the Two Sicilies, (Part II.) Statement of the	9	6	165
Commerce and navigation of the United States with Turkey, (Part II.) Statement of the	9	6	169
Commerce and navigation of the United States with the Ionian Isles, (Part II.) Statement of the	9	6	170
Commerce and navigation of the United States with Liberia, (Part II.) Statement of the	9	6	171
Commerce and navigation of the United States with Muscat, (Part II.) Statement of the	9	6	172
Commerce and navigation of the United States with Siam, (Part II.) Statement of the	9	6	173
Commerce and navigation of the United States with China, (Part II.) Statement of the	9	6	175
Commerce and navigation of the United States with Japan, (Part II.) Statement of the	9	6	182
Commerce and navigation of the United States with the Sandwich Islands, (Part II.) Statement of the	9	6	188
Commerce and navigation of the United States with the Friendly Islands, (Part II.) Statement of the	9	6	189
Commerce and navigation of the United States with the Dominican Republic, (Part II.) Statement of the	9	6	190
Commerce and navigation of the United States with Hayti, (Part II.) Statement of the	9	6	193
Commerce and navigation of the United States with Mexico, (Part II.) Statement of the	9	6	195
Commerce and navigation of the United States with Honduras, (Part II.) Statement of the	9	6	199

Subject.	Vol.	No.	Page.
Commerce and navigation of the United States with Nicaragua, (Part II.) Statement of the	9	6	199
Commerce and navigation of the United States with New Granada, (Part II.) Statement of the	9	6	200
Commerce and navigation of the United States with Venezuela, (Part II.) Statement of the	9	6	209
Commerce and navigation of the United States with Ecuador, (Part II.) Statement of the	9	6	210
Commerce and navigation of the United States with Brazil, (Part II.) Statement of the	9	6	217
Commerce and navigation of the United States with Peru, (Part II.) Statement of the	9	6	224
Commerce and navigation of the United States with Chili, (Part II.) Statement of the	9	6	227
Commerce and navigation of the United States with Bolivia, (Part II.) Statement of the	9	6	229
Commerce and navigation of the United States with the Argentine Confederation, (Part II.) Statement of the	9	6	229
Commerce and navigation of the United States with Uruguay, (Part II.) Statement of the	9	6	232
Commercial relations of the United States with the British Dominions, (Part I.) Statement of the	9	6	3
Commercial relations of the United States with the French Dominions, (Part I.) Statement of the	9	6	93
Commercial relations of the United States with the Spanish Dominions, (Part I.) Statement of the	9	6	159
Commercial relations of the United States with the Portuguese Dominions, (Part I.) Statement of the	9	6	207
Commercial relations of the United States with Holland and its possessions, (Part I.) Statement of the	9	6	232
Commercial relations of the United States with Belgium, (Part I.) Statement of the	9	6	242
Commercial relations of the United States with Denmark and its possessions, (Part I.) Statement of the	9	6	252
Commercial relations of the United States with Sweden and Norway, (Part I.) Statement of the	9	6	254
Commercial relations of the United States with Russia, (Part I.) Statement of the	9	6	259
Commercial relations of the United States with Austria, (Part I.) Statement of the	9	6	306
Commercial relations of the United States with the States of the Zollverein, (Part I.) Statement of the	9	6	324
Commercial relations of the United States with Saxony, (Part I.) Statement of the	9	6	329
Commercial relations of the United States with the Hanse Towns, (Part I.) Statement of the	9	6	355
Commercial relations of the United States with Switzerland, (Part I.) Statement of the	9	6	376
Commercial relations of the United States with the Italian States, (Part I.) Statement of the	9	6	386
Commercial relations of the United States with the Turkish Dominions, (Part I.) Statement of the	9	6	390
Commercial relations of the United States with Japan, (Part I.) Statement of the	9	6	395
Commercial relations of the United States with Siam, (Part I.) Statement of the	9	6	408
Commercial relations of the United States with the Sandwich Islands, (Part I.) Statement of the	9	6	430
Commercial relations of the United States with the Feejee Islands, (Part I.) Statement of the.	9	6	446
Commercial relations of the United States with the Dominican Republic, (Part I.) Statement of the	9	6	447
Commercial relations of Mexico, (Part I.) Statement of the	9	6	448
Commercial relations of the United States with Nicaragua, (Part I.) Statement of the	9	6	456

Subject.	Vol.	No.	Page.
Commercial relations of the United States with Costa Rica, (Part I.) Statement of the	9	6	458
Commercial relations of the United States with New Granada, (Part I.) Statement of the	9	6	459
Commercial relations of the United States with Venezuela, (Part I.) Statement of the	9	6	461
Commercial relations of the United States with Ecuador, (Part I.) Statement of the	9	6	464
Commercial relations of the United States with Bolivia, (Part I.) Statement of the	9	6	465
Commercial relations of the United States with Brazil, (Part I.) Statement of the	9	6	467
Commercial relations of the United States with Peru, (Part I.) Statement of the	9	6	482
Commercial relations of the United States with the Argentine Confederation, (Part I) Statement of the	9	6	488
Commercial relations of the United States with Paraguay, (Part I.) Statement of the	9	6	489
Commercial relations of the United States with foreign nations for the year ending September 30, 1860, (Parts I and II, in one volume, quarto.) Annual report of the Secretary of State of the	9	6	1
Commerce of each State and Territory, exhibiting the value of exports of American and foreign produce in American and foreign vessels, and of imports in American and foreign vessels, during the year ending June 30, 1860, (Commerce and Navigation Report.) Statement of the	8	.....	552
Commerce and navigation of the United States for the year ending June 30, 1860, (Com. and Nav. Report.) Report of the	8	.....	1
(See alliterated index and index to general statements of the above, at pages 677 *and* 684 *of same.)*			
Commerce of the United States, exhibiting the value of exports to and imports from each foreign country, and the tonnage of American and foreign vessels arriving from and departing to each foreign country, during the year ending June 30, 1860, (Commerce and Navigation Report.) Statistical view of the	8	.....	548
Commissary General of the Army for 1860. Annual report of the	2	1	237
Commissioner of the General Land Office on the operations of his office during the year 1860 within the States of Ohio, Indiana, Michigan, Illinois, Wisconsin, Iowa, California, Oregon, Minnesota, Florida, Alabama, Mississippi, Louisiana, Arkansas, Missouri, and the Territories of Kansas, Nebraska, Minnesota, (known as Dakota,) Washington, New Mexico, and Utah. Annual report of the	1	1	49
Commissioner of Indian Affairs for 1860. Annual report of the	1	1	235
(*For list of documents accompanying the above report see page* 251 *of same.*)			
Commissioner of Pensions. Annual report of the operations of the office of	1	1	467
Commissioner of Public Buildings, with a compendium thereof. Annual report of the	1	1	483
Commissioner of Patents, on the operations of his office in relation to arts and manufactures for the year 1860, (Part I.) Annual report of the	5	7	1
Commissioner of Patents, on the operations of the Patent Office in relation to arts and sciences, for the year 1860, (Part 2.) Annual report of the	6	7	1
(*For report of Commissioner of Patents on agriculture, see Ho. of Reps. documents.*)			
Congress to coerce a seceding State into submission to the authority of the general government. Views of the President in relation to the power of	1	1	11
Congressional Representatives on the same day. Recommendation by the President for the passage of a law requiring the election of all the	1	1	25
Construction, Equipment, and Repair. Annual report with estimates of the Bureau of	3	1	230

Subject.	Vol.	No.	Page.
Consular returns of the commerce and navigation of the United States with foreign countries for the year ending September 30, 1860, (Part II.) Statements of	9	6	1
Contingent. (See *Expenses.*)			
Contracts made by Bureau of Provisions and Clothing for the Navy Department for "supplies for the Navy" during the year ending June 30, 1861, under acts of 1808 and 1809. Statements of	3	1	367
Contracts for supplying materials for the Navy, under the cognizance of the Bureau of Construction, Equipment, and Repair, with the names of contractors, articles furnished, prices thereof, and where deliverable. List of	3	1	266
Costa Rica. Views of the President on the condition of the claims of American citizens on the government of	1	1	19
Costa Rica. (See *Commercial relations.*)			
Court of the United States, in the case of the United States *vs.* Kochersperger, in relation to the conveyance and delivery of letters by private individuals. Opinion of the circuit	3	1	507
Cruise of the naval practice-ship Plymouth by Commander Craven. Report of the summer's	3	1	28
D.			
Danish dominions. (See *Commerce and Navigation.*)			
Dead letters containing money and articles of value registered and sent out from the General Post Office Department during the year ending June 30, 1860	3	1	425
Dead letters containing money, and those containing articles of value other than money, registered and sent out for delivery to the owners and writers thereof. Statements of the number of	3	1	498
Deaf and Dumb and the Blind in the District of Columbia. Report of the Board of Directors of the Institution for the	1	1	552
Deaths, &c., in the Navy. (See *Navy.*)			
Defenses. (See *Fortifications.*)			
Delaware, Maryland, and Ohio. Statement of mail service in the States of New Jersey, Pennsylvania	3	1	493
Denmark. (See *Commercial Relations* and *Commerce and Navigation.*)			
Departments of the Treasury, War, Navy, General Post Office, and Attorney General's Office. Remarks and recommendations of the President in relation to the reports of the	1	1	27
Dismissions, &c., in the Navy. (See *Navy.*)			
District of Columbia to the favorable regard of Congress. Remarks of the President commending the interests of the people of the	1	1	28
District of Columbia. Remarks of the Secretary of the Interior in relation to the public buildings, institutions, grounds, &c., in the	1	1	45
District of Columbia. Report with plans and estimates for a new jail for the	1	1	499
District of Columbia. Report of the Inspectors, Warden, &c., of the Penitentiary of the United States for the	1	1	505
Dome. (See *Capitol.*)			
Dominican Republic. (See *Commercial Relations* and *Commerce and Navigation.*)			
Drop letters. Report relating to a modification of the act levying postage on	3	1	443
E.			
Ecuador. (See *Commercial Relations* and *Commerce and Navigation.*)			
Eighth census. (See *Census.*)			
Election of Congressional representatives throughout all the States on a day certain previous to the 4th of March in each odd year. Recommendation of the President for the passage of a law for the	1	1	25
Engineer of the Potomac water-works. Report of the	1	1	564
Engineer Bureau for 1860. Annual report of the	2	1	253

Subject.	Vol.	No.	Page.
England, in relation to the extradition of John *alias* Jack Anderson, a man of color, who was charged with murder in the State of Missouri, and fled to Canada. Correspondence between Mr. Cass, late, and Mr. Black, present, Secretary of State, and Mr. Dallas, American minister at London, and Lord Lyon, minister from	4	11	1
Enrolled tonnage. (See *Tonnage.*)			
Estimates of appropriations for salaries and contingent expenses for the General Land Office during the fiscal year ending June 30, 1862	1	1	100
Estimate of appropriations for the surveying department of the General Land Office, and for the surveying of the public lands	1	1	103, 106
Estimates for fortifications now existing, or in course of construction, for the fiscal year ending June 30, 1862	2	1	271
Estimates for repairing and completing the several works for lake harbor improvements, under the superintendence of Colonel Graham, of the Topographical Engineers	2	1	549
Estimates of the office of Secretary of the Navy and the Southwest Executive Building	3	1	52
Estimates, &c., of the Bureau of Yards and Docks	3	1	55
Estimates, &c., of the Bureau of Ordnance and Hydrography	3	1	206
Estimates, &c., of the Bureau of Construction, Equipment, and Repairs	3	1	230
Estimates, &c., of the Bureau of Provisions and Clothing	3	1	346
Estimates, &c., of the Bureau of Medicine and Surgery	3	1	371, 379, 380
Estimates of the Paymaster and Quartermaster of the Marine Corps	3	1	382
Estimate (civil) of the office of Secretary of the Navy and Bureaus of the Navy Department	3	1	398
Estimate (general) of the Southwest Executive Building	3	1	399
Estimate (summary) of the Navy	3	1	399
Estimate (general) of the Navy proper	3	1	402
Estimate (general) of the Marine Corps	3	1	403
Estimate (general) for special objects under the control of the Navy Department	3	1	404
Estimates for repair and maintenance for vessels afloat and in ordinary. Detail of	3	1	241
Estimates of the amount required for the expenditures under the head of "enumerated contingent" for the years ending June 30, 1861 and 1862	3	1	233
Estimates for pay of commission, warrant, and petty officers, seamen, engineer corps of the Navy, required for vessels proposed to be kept in commission, including receiving vessels, for the year ending June 30, 1862	3	1	232
Estimates for expenditures of Bureau of Construction, Equipment, and Repair for the year ending June 30, 1862	3	1	231, 232
Estimates for wear and tear of vessels in commission, including fuel for steamers, and the purchase of hemp for the Navy, for the year ending June 30, 1862	3	1	232
Estimates for Navy Department under the control of the Bureau of Construction, Equipment, and Repairs, for the year ending June 30, 1862	3	1	234
Estimate for provisions, general and contingent expenses, under the cognizance of the Bureau of Provisions and Clothing of the Navy	3	1	348
Estimate of expenses of the Bureau of Provisions and Clothing for the year ending June 30, 1862	3	1	349
Estimate from the Bureau of Provisions and Clothing for that portion of the naval service coming under its cognizance for the year ending June 30, 1862	3	1	349
Estimate for the sum which will be required for the Navy, under the head of "contingent," for the fiscal year ending June 30, 1862	3	1	350
Estimates for pay and subsistence of officers, non-commissioned officers, &c., of United States Marine Corps for the year ending June 30, 1862	3	1	387

Subject.	Vol.	No.	Page.
Estimate for the Quartermaster's Department for the year ending June 30, 1862	3	1	389
Estimates of receipts and expenditures of the General Post Office for the year 1862	3	1	422
Estimate for the transportation of foreign mails for 1862	3	1	423
Executive building. (See *Estimates.*)			
Expedition. Report of the progress, &c., made by Captain Engle, Lieutenants Jeffers and Morton, in the Chiriqui	3	1	36
Expedition to Behring's Straits. Report of Captain Ringgolds'	3	1	44
Expedition to Behring's Straits under his charge. Report of Captain Rogers'	3	1	48
Expedition and survey of the route from San Francisco to China. Report of the	3	1	50
Expedition to Chili, &c. Report of Lieutenant Gilliss's	3	1	49
Expenditures and balances. Statement of navy appropriations	3	1	405
Expenditures under the head of "contingent expenses of the Navy." Statement of	3	1	240, 410
Expenditures of the Post Office Department for the year ending June 30, 1860. Statement of receipts and	3	1	538, 539
Expenditures of the Post Office Department in each State and Territory during the year ending June 30, 1860. Statement of receipts and	3	1	540
Expenditures during the year ending June 30, 1860, and the value of all stores on hand at the several navy yards on the 1st July, 1860. Statement of receipts and	3	1	239
Explorations and surveys of the San Juan and Yellow Stone rivers and the military road from Fort Benton and Fort Walla-Walla. Report of	2	1	146
Explorations and surveys in Utah, California, and Oregon. Report in relation to	2	1	297
Exported, and whither exported, during the year ending June 30, 1860. (Commerce and Navigation Report.) General and summary statements of goods, wares, and merchandise of the growth, produce, and manufacture of the United States	8	.....	8, 54
Exported from the United States, and whither exported, during the year ending June 30, 1860. (Commerce and Navigation Report.) General and summary statements of goods, wares, and merchandise of the growth, produce, and manufacture of foreign countries	8	.....	58, 160
Exported from each collection district during the year ending June 30, 1860. (Commerce and Navigation Report.) General statement of the quantity and value of goods, wares, and merchandise of the growth, produce, and manufacture of the United States	8	.....	308
Exports to and imports from each foreign country, and the tonnage of American and foreign vessels arriving from and departing for each foreign country during the year ending June 30, 1860. (Commerce and Navigation Report.) Statistical view of the commerce of the United States, exhibiting the value of	8	.....	548
Exports of American and foreign produce in American and foreign vessels, and of imports in American and foreign vessels during the year ending June 30, 1860. (Commerce and Navigation Report.) Statement of the commerce of each State exhibiting the value of	8	.....	552
Expresses. Opinion of the circuit court of the United States in relation to private mail	3	1	507
Extension of the Capitol. (See *Capitol.*)			
Extension of the General Post Office. (See *Post Office.*)			
Extradition of John, *alias* Jack Anderson, a man of color and fugitive from justice who fled to Canada Correspondence relating to the	4	11	1
F.			
Fegee Islands. (See *Commercial Relations.*)			
Financial affairs of the country. Remarks of the President on the	1	1	23

Subject.	Vol.	No.	Page.
Fisheries from 1815 to 1860, inclusive. (Commerce and Navigation Report.) Comparative view of the registered and enrolled tonnage employed in the whale fishery; also, the proportion of the enrolled and licensed tonnage employed in the coasting trade, cod, mackerel, and whale	8	.....	670
Foreign nations for the year ending September 30, 1860, (Parts I and II, in one volume, quarto.) Report of the Commercial Relations of the United States with	9	6	1
Foreign stations. (See *Naval Depots.*)			
Foreign mail service. (See *Mails.*)			
Foreign vessels. (See *Vessels.*)			
Fort Wayne, Detroit, Michigan. Report on the condition, &c.	2	1	254
Fort Porter, Black Rock, near Buffalo, New York. Report on the condition, &c., of	2	1	254
Fort Niagara, mouth of Niagara river, New York. Report on the condition, &c., of	2	1	254
Fort Ontario, Oswego, New York. Report on the condition, &c., of	2	1	254
Fort Montgomery, Rouse's Point, New York. Report on the condition, &c., of	2	1	255
Fort George, on Hog Island Ledge, Portland Harbor, Maine. Report on the condition, &c., of	2	1	255
Fort Knox, narrows of the Penobscot river, Maine. Report on the condition, &c., of	2	1	255
Fort Warren, Boston harbor, Massachusetts. Report on the condition, &c., of	2	1	256
Fort Winthrop, Boston harbor, Massachusetts. Report on the condition, &c., of	2	1	256
Fort Independence, Boston harbor, Massachusetts. Report on the condition, &c., of	2	4	256
Fortifications at the entrance of New Bedford harbor, Massachusetts. Report on the condition, &c., of the	2	1	257
Fort Adams, Newport harbor, Rhode Island. Report on the condition, &c., of	2	1	257
Fort Griswold, New London harbor, Connecticut. Report on the condition, &c., of	2	1	257
Fort Trumbull, New London harbor, Connecticut. Report on the condition, &c., of	2	1	257
Fort Schuyler, eastern entrance to New York harbor, New York. Report on the condition, &c., of	2	1	258
Fort at Willett's Point, eastern entrance of New York harbor, New York. Report on the condition, &c., of the	2	1	258
Fort Columbus, at Castle Williams, New York harbor, New York. Report on the condition, &c., of	2	1	258
Fort Wood, New York harbor, New York. Report on the condition, &c., of	2	1	259
Fort Hamilton, New York harbor, New York. Report on the condition, &c., and the new battery at	2	1	259
Fort Richmond, New York harbor, New York. Report on the condition, &c., of	2	1	259
Fort on the site of Fort Tompkins, New York harbor, New York. Report on the condition, &c., of	2	1	260
Fort at Sandy Hook, New Jersey. Report on the condition, &c., of the	2	1	260
Fort Mifflin, Delaware river, Pennsylvania. Report on the condition, &c., of	2	1	261
Fort Delaware, Delaware river, Delaware. Report on the condition, &c., of	2	1	261
Fort Carroll, Baltimore harbor, Maryland. Report on the condition, &c., of	2	1	261
Fort Monroe, Old Point Comfort, Virginia. Report on the condition, &c., of	2	1	262
Fort Calhoun, Hampton roads, Virginia. Report on the condition, &c., of	2	1	262
Fort Macon, Beaufort harbor, North Carolina. Report on the condition, &c., and the preservation of the site of	2	1	263

Subject.	Vol.	No.	Page.
Fort Caswell, mouth of Cape Fear river, North Carolina. Report on the condition, &c., and the preservation of the site of	2	1	263
Fort Moultrie, Charleston harbor, South Carolina. Report on the condition, repairs, and preservation of the site of	2	1	264
Fort Sumter, Charleston harbor, South Carolina. Report on the condition, &c., of	2	1	264
Fortifications of Castle Pinckney, Charleston harbor, South Carolina. Report on the condition and repairs of the	2	1	264
Fort Pulaski, Savannah river, Georgia. Report on the condition, &c., of	2	1	264
Fort Jackson, Savannah river, Georgia. Report on the condition and repairs of	2	1	265
Fort Clinch, Amelia island, Florida. Report on the condition, &c., of	2	1	265
Fort Taylor, Key West, Florida. Report on the condition, &c., of	2	1	265
Fort Jefferson, Garden Key, Tortugas, Florida. Report on the condition, &c., of	2	1	266
Fort Pickins, Pensacola harbor, Florida. Report on the condition, &c., of	2	1	266
Fort Barrancas, Pensacola harbor, Florida. Report on the condition, &c., of	2	1	267
Fort McRae, Pensacola harbor, Florida. Report on the condition, &c., of	2	1	267
Fort Morgan, entrance to Mobile harbor, Alabama. Report on the condition, &c., of	2	1	267
Fort Gaines, Dauphin island, entrance to Mobile harbor, Alabama. Report on the condition, &c., of	2	1	267
Fort on Ship island, coast of Mississippi, Mississippi. Report on the condition, &c., of the	2	1	268
Fortifications for military defenses at Proctor's Landing, Louisiana. Report on the condition, &c., of the	2	1	268
Fort at St. Philip, Mississippi river, Louisiana. Report on the condition and repairs of	2	1	268
Fort Jackson, Mississippi river, Louisiana. Report of the condition, &c., of	2	1	269
Fortifications for the defense of the entrance to Galveston harbor, Texas. Report on the	2	1	269
Fort at Alcatraz Island, San Francisco harbor, California. Report on the condition, &c., of the	2	1	269
Fort at Fort Point, entrance of San Francisco harbor, California. Report on the condition, &c	2	1	270
Fortifications and military defenses at Forts Wayne, Porter, Niagara, Ontario, Montgomery, Hog Island Ledge, Knox, Warren, Winthrop, Independence, entrance of New Bedford harbor, Adams, Griswold, Trumbull, Schuyler, Willett's Point, Columbus, and Castle Williams, Wood, Hamilton, Richmond, Tompkins, Staten Island, Sandy Hook, Mifflin, Delaware, Carroll, Monroe, Calhoun, Macon, Caswell, Moultrie, Sumter, Castle Pinckney, Pulaski, Jackson, on the Savannah river, Clinch, Taylor, Jefferson, Pickens, Barrancas, McRae, Morgan, Gaines, on Ship Island, at Proctor's landing, St. Philip, Jackson, on the Mississippi river, at the entrance to Galveston harbor, at Alcatraz Island, and at Fort Point. Report of the Engineer Bureau in relation to forts	2	1	253
France. Views of the President on the relations between the government of the United States and	1	1	16
French mail. (See *Mails*.)			
French Dominions. (See *Commercial Relations* and *Commerce and Navigation*.)			
Friendly Islands. (See *Commerce and Navigation*.)			
G.			
Geographical positions of places determined from astronomical observations from 1819 to 1859, by Colonel Graham, of the corps of Topographical Engineers and his assistants. Tabular statement of	2	1	570

Subject.	Vol.	No.	Page.
Geological and mineralogical developments of the surveys of the public lands. Statement of	1	1	77
Great Britain, in relation to Honduras and Nicaragua, and the right of searching American vessels, and the controversy relating to the Island of San Juan, near Washington Territory. Views of the President setting forth the relations between the United States and	1	1	15
Great Britain and Ireland, in relation to the postal convention between the two governments. Copy of additional articles to the convention between the United States and the United Kingdom of	3	1	453
H.			
Hamburg mails. (See *Mails.*)			
Hamburg. Copy of additional article to a postal convention between the United States and the Hanseatic Republic of	3	1	486
Hanseatic Republic of Bremen. (See *Bremen.*)			
Hanseatic Republic of Hamburg. (See *Hamburg.*)			
Hanse Towns. (See *Commercial Relations* and *Commerce and Navigation.*)			
Harbor improvements for 1860. Annual report of Colonel Graham of the corps of Topographical Engineers on the Lake	2	1	547
Harbor at Oswego, New York. Copy of an act of the legislature of New York to enable the owners of land in Oswego to enlarge the	2	1	959
Hayti. (See *Commerce and Navigation.*)			
Holland and its possessions. (See *Commercial Relations* and *Commerce and Navigation.*)			
Honduras. (See *Great Britain* and *Commerce and Navigation.*)			
Hospital for the Insane. Reports of the Superintendent, and Board of Visitors of the Government	1	1	530
Hospital fund on the 1st of July, 1860. Statement of the condition of the Navy	3	1	376
Hospital for the Insane, during the year ending September 30, 1860. Statement of operations of the Government	3	1	377
I.			
Imported into the United States, and from whence imported, during the year ending June 30, 1860. (Commerce and Navigation Report.) General statement of goods, wares, and merchandise, of the growth, produce, and manufacture of foreign countries	8	.....	172
Imported into the United States in American and foreign vessels during the year ending June 30, 1860. (Commerce and Navigation Report.) Summary statement of the quantity and value of goods, wares, and merchandise	8	.....	294
Imported into each collection district of the United States during the year ending June 30, 1860. (Commerce and Navigation Report.) General statement of goods, wares, and merchandise of the growth, produce, and manufacture of foreign countries	8	.....	404
Imports from each foreign country during the year ending June 30, 1860, with the tonnage of American and foreign vessels arriving from and departing to each foreign country. (Commerce and Navigation Report.) Statistical view of the commerce of the United States, exhibiting the value of exports to and	8	.....	548
Imports in American and foreign vessels during the year ending June 30, 1860. (Commerce and Navigation Report.) Statement exhibiting the commerce of each State with the value of exports of American and foreign produce in American and foreign vessels, and of	8	.....	552
Imported, during the year ending June 30, 1860. (Commerce and Navigation Report.) General and summary statements exhibiting the indirect trade of the United States, the countries of production and of shipment, with the value of the articles	8	.....	610 646

Subject.	Vol.	No.	Page.
Indian Affairs. Remarks of the Secretary of the Interior on the operations of the Indian Office, and the reports of the Commissioner of	1	1	34
Indian Affairs for 1860. Annual report of the Commissioner of	1	1	235
Indians in the State of New York. Report of Bela H. Colegrove, agent for the	1	1	255
Indians in the State of Michigan. Report of A. M. Fitch, agent for the	1	1	256
Indians in the vicinity of Green Bay. Report of the agency for the	1	1	259
Indian superintendency. Report of the northern	1	1	266
Indian superintendency. Report of the central	1	1	304
Indian superintendency. Report of the southern	1	1	339
Indian superintendency. Report of A. Humphreys, agent for the Utah	1	1	393
Indian superintendency. Report of the Washington and Oregon	1	1	395
Indians' neutral land. Correspondence relative to the intruders upon the Cherokee	1	1	444
Indian agents, requiring prompt rendition of their accounts. Indian office circular to	1	1	451
Indians. Special report of Commissioner Greenwood relative to his visit to the Cheyenne and Arrapahoe	1	1	452
Indian agents of California. Official instructions to the newly appointed	1	1	454
Indian agents in California. Letters appointing John A. Dreibelbes and J. Y. McDuffie supervising	1	1	456 457
Indians for bounty land. Statement showing the action of the Indian Office relative to applications of	1	1	458
Indian trust fund. Report of G. Bailey, disbursing clerk, upon the	1	1	459
Ionian Isles. (See *Commerce and Navigation.*)			
Infirmary. Annual report of the Resident Physician of the Washington	1	1	495
Insane in the District of Columbia. Reports of the Superintendent, Board of Visitors, &c., of the Government Hospital for the	1	1	530
Insane in the District of Columbia. Statement of the operations of the Government Hospital for the	3	1	377
Institution for the Deaf and Dumb and the Blind in the District of Columbia. Report of the Board of Directors for the	1	1	552
Interior, on the operations of the Interior Department during the year 1860. Annual report of the Secretary of the	1	1	29
Interoceanic ship canal. (See *Canal.*)			
Inventions. (See *Patents.*)			
Isthmus of Darien. Report of a survey by Lieut. Michler, for an interoceanic canal near the	7	9	1
Italian States. (See *Commercial Relations.*)			
J.			
Jail for the District of Columbia. Report of Edward Clark, architect, with plans and estimates for a new	1	1	499
Japan. Views of the President on the relations between the United States and	1	1	18
Japan. (See *Commercial Relations* and *Commerce and Navigation.*)			
Judicial expenses of the government. Remarks of the Secretary of the Interior in relation to the want of uniformity in the	1	1	41
K.			
Kansas. Views of the President in relation to proceedings in	1	1	21
Kansas to the favorable consideration of Congress. Recommendation by the President of the subject of the necessities of the people of	1	1	28
L.			
Laboratory. (See *Naval Laboratory.*)			
Labor at the several United States navy-yards for the years 1840 and 1860. Comparative statement of the cost of mechanical	4	4	65

Subject.	Vol.	No.	Page.
Lake harbor works and steam dredges. Report in relation to	2	1	297
Lakes for 1860. Annual Report of the survey of the northern and northwestern	2	1	322
Lake harbor improvements for 1860. Annual Report of Colonel Graham on the	2	1	547
Lake Michigan. Report of the discovery, by Colonel Graham, of a lunar tidal wave on	2	1	584
Land surveys. (See *Surveys.*)			
Land Office, on the operations of his office during the year 1860. Annual Report of the Commissioner of the General	1	1	49
Lands. Remarks of the Secretary of the Interior on the Report of the Commissioner of Public	1	1	29
Lands at the Hot Springs in Arkansas. The Secretary of the Interior recommends the sale of the reserved	1	1	31
Lands granted to the State of Iowa, by act of 1846, for the improvement of the navigation of the Des Moines river. Remarks of the Secretary of the Interior in relation to the	1	1	31
Lands granted to the State of Wisconsin for the improvement of the Fox and Wisconsin rivers. Remarks of the Secretary of the Interior in relation to the	1	1	32
Lands in the Territory of Washington, by the Puget's Sound Agricultural Company. Remarks of the Secretary of the Interior on the Nisqually and Cowlitz claims to	1	1	33
Land in acres and in square miles contained in the several States and Territories. Statement of the area or quantity of	1	1	53
Lands proclaimed for sale during the five quarters ending September 30, 1860; and in California in October, 1860. Statement of the quantity of	1	1	63
Lands granted for railroads, under acts of 1856 and 1857, in the States of Alabama, Florida, Iowa, Louisiana, Michigan, Minnesota, Mississippi, and Wisconsin. Statement of	1	1	67
Lands granted for the improvement of Des Moines river and Rock River canal. Statement relating to	1	1	68
Land claims against the United States. Statements relating to Revolutionary bounty, war, and war of 1812, Virginia military and preëmption	1	1	69
Land Office for 1860. Abstract of the annual report of the Commissioner of the General	1	1	79
Lands under the act of 1854. Regulations concerning the graduation of the price of public	1	1	72
Land reservations for the Shawnee, Kaskaskia, Miamie, Wyandotte, Sacs and Foxes, and Stockbridge Indians. Patents issued under certain treaty	1	1	75
Lands containing minerals. Report relating to the public	1	1	77
Land surveying operations from October 1, 1859, to September 30, 1860. Statement of	1	1	81
Land prepared for market and offered at public sale during the fiscal year ending June 30, 1859, and the quarter ending September 30, 1860. Exhibit of the quantities of public	1	1	82
Lands during the five quarters ending September 30, 1860. Table of sales and other disposals of the public	1	1	83
Lands selected and those approved under the acts of 1849 and 1850. Statement of the quantity of swamp	1	1	84,85
Lands patented to the several States under the swamp land act of September 28, 1850. Statement of the quantity of	1	1	86
Land business under acts of 1847, 1850, 1852, and 1855. Statement showing the condition of the bounty	1	1	87
Lands during the first and last halves of the fiscal year ending June 30, 1860. Statements of sales of public	1	1	88,94
Lands for 1860. Reports of the surveyors general of the public	1	1	107
Letters containing money and other articles of value registered and sent out from the General Post Office during the year ending June 30, 1860. Statement of the number of dead	3	1	425
Letters and the regulations of the penny post system. Report in relation to a modification of the law levying postage on drop	3	1	443
Letters. Report in relation to the unfavorable results of registering	3	1	445

Subject.	Vol.	No.	Page.
Letters by private express. Opinion of the circuit court of the United States in relation to carrying and delivery of	3	1	507
Letters and newspapers exchanged between the United States post offices and those of Great Britain, Prussia, France, Belgium, Bremen, and Hamburg, in 1860. Statement of	3	1	549
Liberia. (See *Commerce and Navigation.*)			
Lunar tidal wave in Lake Michigan. (See *Lake Michigan.*)			
M.			
Mackerel fishery. (See *Fisheries.*)			
Mails between the United States and Prussia during the year ending June 30, 1860. Receipts and disbursements in closed	3	1	553
Mail service by railroad, as in operation September 30, 1860, in the States of New Jersey, Pennsylvania, Delaware, Maryland, and Ohio. Statement of	3	1	494
Mail service by railroad, as in operation June 30, 1860, in the States of Maine, New Hampshire, Vermont, Massachusetts, Rhode Island, Connecticut, New York, New Jersey, Pennsylvania, Delaware, Maryland, Ohio, North Carolina, South Carolina, Georgia, Florida, Michigan, Indiana, Illinois, Wisconsin, Iowa, Missouri, Kentucky, Tennessee, Alabama, Mississippi, Arkansas, Louisiana, Texas, and California. Statement of	3	1	498
Mail service by steamboat, as in operation September 30, 1860, in the States of New Hampshire, Massachusetts, Rhode Island, Connecticut, New York, New Jersey, Pennsylvania, Maryland, Ohio, Virginia, North Carolina, South Carolina, Georgia, Florida, Michigan, Wisconsin, Iowa, Missouri, Minnesota, Kentucky, Tennessee, Alabama, Mississippi, Arkansas, Louisiana, Texas, California, Oregon, and Washington Territory. Statement of	3	1	511
Mail matter by private expresses. Opinion of the circuit court of the United States for the eastern district of Pennsylvania in the case of the United States *vs.* Kochersperger, in relation to the carriage and delivery of	3	1	507
Mails received in and sent from the United States during the year ending June 30, 1860. Statement of letter postage on British	3	1	544
Mails received in and sent from the United States during the year ending June 30, 1860. Statement of letter postage on Prussian	3	1	545
Mails received in and sent from the United States from January 24 to June 30, 1860. Statement of letter postage on French	3	1	546
Mails received in and sent from the United States from January 24 to June 30, 1860. Statement of letter postage on Belgian	3	1	547
Mails received in and sent from the United States during the year ending June 30, 1860. Statement of letter postage on Bremen	3	1	548
Mails received in and sent from the United States during the year ending June 30, 1860. Statement of letter postage on Hamburg.	3	1	548
Mails between the governments of Great Britain and Ireland and the United States. Copy of additional articles to the convention to regulate postages and the transmission of the	3	1	453
Mail service by railroad, steamboat, coach, and inferior modes, in the States of New Jersey, Pennsylvania, Delaware, Maryland, and Ohio. Statement of the annual transportation and cost of the	3	1	493
Mail routes, mail contractors, route agents, local agents, and mail messengers at the close of the contract year ending June 30, 1860. Number of	3	1	491
Mail service for the year ending June 30, 1860. Tabular statement of.	3	1	489
Mail contractors, &c., in the years 1852 and 1860. Statement of the	3	1	427
Mail service during the year ending June 30, 1860. Statement of	3	1	429
foreign	3	1	452
Mail service between the Atlantic and Pacific coasts for the year 1859–60. Statement of ocean	3	1	433
Mail service between San Antonio and San Diego. Statements relating to the	3	1	437
Mail service between Charleston, Savannah, and Key West. Report of.	3	1	437

Subject.	Vol.	No.	Page.
Mail service on the Mississippi river. Report of the	3	1	438
Mail service between New York and New Orleans. Report of	3	1	439
Mail service between New York and Boston. Report of	3	1	440
Mails on railroads. Report in relation to the irregularities of the transportation of the	3	1	440
Mail routes under act of May 16, 1860. Report in relation to the establishment of new	3	1	441
Mail matter. Report in relation to the prepayment of	3	1	441
Mails. Report in relation to the pennypost regulations and a modification of the law levying postage on "drop letters" sent through the	3	1	443
Manufactures. (See *Arts and Manufactures.*)			
Marine Corps. Report of the commandant with detailed estimates of the quartermaster and paymaster of the	3	1	382
Marine Corps, on the 31st October, 1860. General return of officers, &c., of the	3	1	383
Marine Corps, under advertisement of September 22, 1859. Schedule of bids and existing contracts for rations, clothing, &c., in the	3	1	392 395
Marines in the United States service annually from 1840 to 1860. Estimate of the number of seamen and	4	4	30
Maryland and Ohio. Statement of mail service in the States of New Jersey, Pennsylvania, Delaware	3	1	493
Mechanical labor. (See *Labor.*)			
Medical corps of the Navy. (See *Navy.*)			
Medicine and Surgery. Annual report with estimates of the Bureau of.	3	1	371
Meteorological observations at various points on the northern and northwestern lakes. Tabular statements of	2	1	354
Mexico. Views of the President on the condition of the relations between the United States and	1	1	19
Mexico. (See *Commerce and Navigation* and *Commercial Relations.*)			
Midshipmen. (See *Academy.*)			
Military Academy at West Point, New York. (See *Academy.*)			
Military defenses. (See *Forts and Fortifications.*)			
Military roads. (See *Roads.*)			
Military expeditions against neighboring states at peace with the United States. Remarks of the President relative to setting on foot unlawful	1	1	24
Mullen and Colonel Wright, relative to the movement of troops overland to the northern portion of the Pacific, (No. 2, special session.) Communications from Major Steer and Lieutenant	4	.....	1
Muscat. (See *Commerce and Navigation.*)			
N.			
National defenses. (See *Fortifications.*)			
Nautical Almanac for 1860. Report of the progress and condition of the American Ephemeris and	3	1	223
Naval Academy at Annapolis, Maryland. Report of the board of officers appointed to witness the examination of acting midshipmen, and to examine into the state of the police, discipline, and general management of the	3	1	27
Naval practice-ship Plymouth. Report of the summer's cruise, by Commander Craven, of the	3	1	28
Naval surveying expedition. Preliminary reports of Captain Engle, chief; Lieutenant Jeffers, hydrographer; Lieutenant Morton, topographer; and Doctor Evans, geologist, of the Chiriqui	3	1	36
Naval expedition. Report of Captain Ringgold, of the progress made in reducing the notes, surveys, &c., made under his direction whilst in command of the North Pacific and Behring's Straits	3	1	44
Naval expedition under his charge. Report of Commander John Rodgers, of the progress made during the past year, and the present condition of the work of the North Pacific and Behring's Straits	3	1	48

Subject.	Vol.	No.	Page.
Naval astronomical expedition to Chili, of the progress made during the past year, and present condition, &c., of the work under his charge. Report of Lieutenant Gilliss, conductor of the late	3	1	49
Naval survey of the route from San Francisco to China. Report of Lieutenant Brooke, of the progress made in preparing his report of the	3	1	50
Naval depots on foreign stations, July 1, 1860. Statement of the value of provisions, clothing, &c., at the	3	1	351
Naval squadrons on foreign stations, during the year ending June 30, 1860. Statement of the value of shipments made by the Bureau of Provisions and Clothing to the United States	3	1	352
Naval stores at home and abroad, or otherwise destroyed, loss by leakage, evaporation, &c.; amount condemned, with the net proceeds of the sales thereof at auction, from July 1, 1859, to June 30, 1860. Statement of the cost of provisions, &c., condemned on board the national vessels and at the	3	1	353
Naval stores from Boston to Valparaiso, Chili, St. Paul de Loando, Africa, Hong Kong, China, and Key West, Florida. Statements of proposals received for the transportation of	3	1	365 366
Naval stations within the United States, and from squadrons and vessels on separate service in commission on home and foreign stations, for the year ending December 31, 1859. Tabular statement of sick and disabled seamen at	3	1	372
Naval Hospital fund, July 1, 1860. Statement of the condition of the	3	1	376
Naval Hospital for the Insane, during the year ending September 30, 1860. Statement of the operations of the government	3	1	377
Naval Laboratory, on the 30th of June, 1860. Statement of the operations and condition of the	3	1	377
Naval stations and on board vessels-of-war, &c. Statement of the number and pay of clerks and watchmen at the	4	8	1
Navigation of the United States, during the year ending June 30, 1860. (Commerce and Navigation Report.) Statements of the commerce and	8	.....	1
(See *Alliterated index and index to general statements of the above, at pages* 677 *and* 684 *of same.*)			
Navigation of the United States with foreign governments, during the year ending September 30, 1860. Parts I and II, quarto. Report, with statements of the commerce and	9	6	1
(See *indexes to the above, at pages* 7 *and* 9, *Part I of same.*)			
Navy, with accompanying documents. Annual report of the Secretary of the	3	1	1
(*For list of papers accompanying the above report, see page* 21 *of same.*)			
Navy, in order to determine the expediency of converting them into efficient war steamers. Remarks of the Secretary of the Navy in relation to the appointment and proceedings of the board of officers for the examination of certain sailing vessels of the	3	1	32
Navy. Views of the Secretary of the Navy in relation to an increase of the Navy; the policy of suspending naval repairs; the importance of navy-yards and docks; the condition of the Naval Academy; the suppression of the African slave trade; the prohibition of the use of patented articles in the Navy by the act of 1860; the supplies of butter, cheese, flour, and tobacco, for the Navy; the condition of the Marine Corps; surgeons and paymasters; the squadron services; the Japanese embassy; the explorations of the Isthmus of Chiriqui, of the Parana and tributaries of the Paraguay river, of Behring's Straits; the astronomical expedition of Captain Gilliss to Chili; and the survey of the route, by Lieutenant Brooke, between San Francisco and China, with a notice of the estimates and expenditures for the support of the Marine Corps and the	3	1	4 to 20
Navy, since the last annual report. List of deaths, resignations, and dismissions in the	3	1	23
Navy, to ascertain the expediency of converting them into efficient war steamers. Report of the board of officers appointed to examine the sailing vessels of the	3	1	32

Subject.	Vol.	No.	Page.
Navy appropriations, expenditures, and balances. Comptroller's statement of	3	1	405
Navy Department. General estimate (civil) of the Secretary's office and Bureaus of the	3	1	298
Navy-yards, on the 1st of July, 1860. Statement of receipts and expenditures during the year ending June 30, 1860, and the value of the stores on hand at the several	3	1	239
Navy, at the several Navy-yards, under the advertisement of August 22, 1860. Tabular statements of scales of offers to supply materials for the	3	1	244 to 265
Navy-yards where deliverable. List of contracts to supply the Navy with materials, with the names of the contractors, date of contract, articles, prices thereof, and the respective	3	1	266
Navy-yards and at naval depots on foreign stations, July 1, 1860. Statement of the value of provisions, clothing, small stores, and contingent on hand at the United States	3	1	351
Navy supplies for the year ending June 30, 1860, under the advertisement of the Bureau of Provisions and Clothing. Statement of proposals received for	3	1	355
Navy, received under the advertisement of the Bureau of Provisions and Clothing, dated April 6, 1860. Abstract of proposals for clothing and clothing materials for the	3	1	359
Navy, under advertisement of the Bureau of Provisions and Clothing, of April 13, 1860. Abstract of proposals received for small stores for the	3	1	361
Navy, under advertisement of April 13, 1860. Abstract of proposals received for supplies of soap, candles, mustard seed, black pepper, bottles and corks, for the	3	1	362
Navy beef and pork for the year 1861, under advertisement of June 25, 1860. Abstract of proposals received for the supply of	3	1	363
Navy-yards during the year ending June 30, 1861. Abstract of proposals received for the supply of fresh beef and vegetables at the several	3	1	364
Navy, during the year ending June 30, 1861, under acts of Congress of April, 1808, and March, 1809. Statement of contracts for supplies for the	3	1	367
Navy. Statement of the operations and the necessity of an increase of the medical corps of the	3	1	377
Navy Department, for the year ending June 30, 1860, under the act of May 1, 1820. Statement of appropriations for the	3	1	406
Navy, as settled and allowed at the Fourth Auditor's Office, for the year ending June 30, 1860. Abstract of expenditures under the head of contingent expenses of the	3	1	410
Navy-yards from a per diem pay to salaries, with a statement of the pay received at each of the navy-yards. Report in relation to changing the compensation of master workmen at the several	4	13	1
Navy, communicating information in relation to the number and character of ships in commission, with their batteries, stations, and number of seamen and marines in service, and the amount expended for equipment and repair for each year, from 1840 to 1860, and other information relating to the comparative expenses of steam and sailing vessels, and the yearly support of each class thereof. Report of the Secretary of the	4	4	1
Navy. Statement of the actual cost per annum of maintaining in commission each class of steam vessels as compared with corresponding classes of sailing vessels of the	4	4	32
Navy, with tonnage and battery, including caliber and weight of broadside, and where built. Statement of the cost of each of the screw ships of the	4	4	54
Navy, as contrasted with the cost of provisions required for maintaining in commission sailing vessels of corresponding classes during each year from 1843 to 1860 inclusive. Statement of the cost of provisions required for maintaining in commission a steam frigate, a steam sloop-of-war of the first class, one of the second, and one of the third class, in the	4	4	16

Subject.	Vol.	No.	Page.
Navy-yards for 1840 and 1860. Comparative statement of the cost of mechanical labor at the several	4	4	65
Navy, communicating a statement of the number and pay of clerks and watchmen at the naval stations, on board of vessels of war, &c. Report of the Secretary of the	4	8	1
Navy, relative to changing the pay per diem of the master workmen at the several navy-yards to salaries. Report of the Secretary of the	4	13	1
	4	13	1
Netherlands. (See *Commerce and Navigation.*)			
New Granada. (See *Commercial Relations—Commerce and Navigation.*)			
New Granada. Views of the President in relation to the exchange of the ratification of the treaty with the Republic of	1	1	19
New Jersey, Pennsylvania, Delaware, Maryland, and Ohio. Statement of mail service in	3	1	493
Nicaragua. (See *Great Britain—Commerce and Navigation—Commercial Relations.*)			
Newspapers and letters exchanged between the United States and England, Prussia, France, Belgium, Bremen, and Hamburg. Statement of the number of	3	1	549
Northern and northwestern lakes. (See *Lakes.*)			
North Pacific and Bhering's Straits naval expedition. (See *Naval Expedition.*)			
Norway and Sweden. (See *Commercial Relations* and *Commerce and Navigation.*)			
O.			
Ocean mails between the Pacific and Atlantic coasts. Remarks of the President in relation to the	1	1	27
Ocean steamers during the year ending June 30, 1860. Statement of letters and newspapers, with the several postages, conveyed by various lines of	3	1	554
Ocean steamers. Statement of closed mail account with the various lines of	3	1	552
Officers in the service of the Interior Department. Complimentary notice by the Secretary of the Interior of the fidelity of the several	1	1	48
Ohio. Statement of mail service in the States of New Jersey, Pennsylvania, Delaware, Maryland, and	3	1	493
Ordnance Office during the year 1860. Annual report of the operations of the	2	1	961
Ordnance and Hydrography. Annual report, with estimates, of the Bureau of	3	1	206
Oswego harbor. (See *Harbors.*)			
P.			
Pacific railroad. (See *Railroad.*)			
Paraguay. (See *Commercial Relations.*)			
Patent Office. Remarks of the Secretary of the Interior on the operations of the	1	1	39
Patents in relation to arts and manufactures for the year 1860, (Part 1.) Annual report of the Commissioner of	5	7	1
Patents in relation to arts and manufactures for the year 1860, (Plates, Part 2.) Annual report of the Commissioner of	6	7	863
(*For report of Commissioner of Patents relating to Agriculture, see Documents House of Representatives.*)			
Paymaster General of the Army for 1860. Annual report of the	2	1	238
Pennsylvania, Delaware, Maryland, and Ohio. Statement of mail service in the States of New Jersey	3	1	493
Pensions. Remarks of the Secretary of the Interior on the report of the Commissioner of	1	1	138
Pensions, with a synopsis of the same. Annual report of the Commissioner of	1	1	467 469

Subject.	Vol.	No.	Page.
Pensions admitted in each State and Territory during the year ending June 30, 1860. Statement of the number and yearly amount of original applications for army	1	1	470
Pensions of the army admitted and payable at the date of issuing the pension certificate for the year ending June 30, 1860. Statement of the amount of arrears of	1	1	474
Pensions on the roll of the several States and Territories on June 30, 1860. Statement of the number and amount of army	1	1	476
Pensions at the several agencies in the States and Territories, during the year ending June 30, 1860. Statement of the amount paid for army	1	1	477
Pensions in the hands of each agent on June 30, 1860. Statement of the amount of funds for paying army	1	1	478
Pensions admitted during the year ending June 30, 1860. Statement of the number and yearly amount of original applications, and for increase of navy	1	1	479
Pensions during the fiscal year ending June 30, 1860. Statement of the amount paid at agencies for navy	1	1	480
Pensions payable at the agencies on June 30, 1860. Statement of the number and yearly amount of navy	1	1	481
Pension agents on June 30, 1860. Statement of the amount of funds in the hands of the several	1	1	482
Peru. (See *Commercial Relations* and *Commerce and Navigation*.)			
Port of Charleston. (See *Charleston*.)			
Portuguese Dominions. (See *Commercial Relations* and *Commerce and Navigation*.)			
Postages reported as due the Canadian, miscellaneous, and German Lloyd lines of steamers, (being sea postages,) for the year ending September 30, 1860. Statement of amount of	3	1	563
Postages accounted for on foreign dead letters sent from and returned to the United States for the year ending June 30, 1860. Statement of the amount of	3	1	563
Postages reported as due the Vanderbilt, Havre, and North Atlantic Steamship Company lines, (being the sea and inland postages,) for the year ending June 30, 1860. Statement of amount of	3	1	563
Postages on mails exchanged between the United States and the British Provinces during the fiscal year ending June 30, 1860. Statement of the amount of	3	1	556
Postage accounts between the United States and England, Prussia, France, Bremen, and Hamburg. Statement of	3	1	557 558 559 560 561
Postages reported as due the various West India lines of steamers for the year ending June 30, 1860. Statement of the amount of	3	1	564
Postage on Belgian mails received in and sent from the United States from January 24 to June 30, 1860. Statement of the amount of letter	3	1	547
Postage on Bremen mails received in and sent from the United States during the year ending June 30, 1860. Statement of letter	3	1	548
Postage on Hamburg mails received in and sent from the United States during the year ending June 30, 1860. Statement of letter	3	1	548
Postages conveyed by various lines of ocean steamers during the year ending June 30, 1860. Statement of letters and newspapers, with the several	3	1	554
Postages reported as due the Vanderbilt, Havre, North Atlantic Steamship Company, Canadian, miscellaneous, German Lloyd, and West India lines of steamships. Statement of the amount of	3	1	563 564
Postage on drop letters. Report relating to a modification of the law levying	3	1	443
Postages on letters carried through unauthorized private expresses. Opinion of the circuit court of the United States in relation to levying and collecting	3	1	507
Postage on British mails received in and sent from the United States during the year ending June 30, 1860. Statement of the amount of letter	3	1	544

Subject.	Vol.	No.	Page.
Postage on Prussian mails received in and sent from the United States during the year ending June 30, 1860. Statement of the amount of letter	3	1	545
Postage on French mails received in and sent from the United States during the year ending June 30, 1860. Statement of the amount of letter	3	1	546
Postal convention between the United States and the Kingdom of Belgium. Copy of the	3	1	454
Postal convention between the United Kingdom of Great Britain and Ireland and the United States. Copy of the additional articles agreed upon to the	3	1	453
Postal laws. Report in relation to proposed amendments to the	3	1	448
Postal convention between the United States and the Hanseatic Republic of Bremen. Copy of additional articles to the	3	1	486, 487
Postal convention between the United States and Hamburg. Copy of additional articles to the	3	1	486
Postal receipts and expenditures in each State and Territory during the fiscal year ending June 30, 1860. Statement of	3	1	540
Postmaster General for the year ending June 30, 1860. Annual report of the	3	1	417
Postmaster at New York. Report in relation to the defalcation of the	3	1	447
Postmaster at New York, of the condition of the system of collecting and delivering letters in said city by carriers and mail messengers, with the names and amount of receipts of the several carriers. Statement of John A. Dix	3	1	499, 505
Post Office Department of the United States and Great Britain, Prussia, France, Belgium, and Hamburg, during the year ending June 30, 1860. Statement of the number of letters and newspapers exchanged between the	3	1	549, 550
Post Office Department, by the Cunard line, for the year ending June 30, 1860. Statement of revenue to the United States and to the United States	3	1	551
Post Office accounts between the United States and England, Ireland, Prussia, France, Bremen, and Hamburg, Germany. Statement of	3	1	557 to 561
Post Office accounts due from the United States to the United Kingdom of Great Britain and Ireland, and to France, Bremen and Hamburg; and due to the United States from Prussia. Statement of balances of	3	1	562, 563
Post Office extension. Report on the operations of the past year of the	2	1	180
Post Office Department, annually, from 1853 to 1860, and estimates for 1861 and 1862. Statement of the receipts and expenditures of the	3	1	424
Post Office Department. Report in relation to the retrenchments of the	3	1	447
Post Office Department of the United States of America, and that of Great Britain and Ireland. Additional articles to the postal convention between the	3	1	453
Post Office Department, for the fiscal year ending June 3, 1860. Report of the Auditor of the Treasury for the	3	1	524
Post Office Department, from 1846 to 1860. Statement of the uncollected revenue and balances of the	3	1	532
Post offices, after deducting the maximum compensation of $2,000 per annum of the postmasters and incidental office expenses. Statement of surplus emoluments and commissions accrued at the principal	3	1	536
Post Office Department, under their several heads, for the fiscal year ending June 30, 1860. Statements of the receipts and expenditures of the	3	1	538, 539
Post offices in the cities of New York, Philadelphia, Baltimore, Boston, Washington, D. C., Providence, St. Louis, New Orleans, Lowell, Manchester, Roxbury, and Harrisburg. Statement of letters, circulars, newspapers, and pamphlets, received and delivered and amounts received and paid out by carriers of the	3	1	543

Subject.	Vol.	No.	Page.
Post offices in each State and Territory, during the year ending June 30, 1860. Statement of receipts and expenditures of the	3	1	540
Patapsco river. (See *River.*)			
Potomac water works. Report of the engineer of the	1	1	564
Practice-ship. (See *Naval practice-ship.*)			
President of the United States on the state of the Union. Annual message of the	1	1	3
President of the United States, in answer to a resolution of the Senate respecting the vacancy in the office of Secretary of War. Message of the	4	2	1
President of the United States, submitting to Congress a series of resolutions adopted by the legislature of Virginia on the 19th of January, 1861, having in view a peaceful settlement of the exciting questions which now threaten the Union. Message of the	4	3	1
President of the United States, communicating the correspondence with foreign ministers at Washington in regard to foreign vessels in the port of Charleston, South Carolina. Message of the	4	5	1
President of the United States, communicating information upon the subject of Aves or Bird Island, claimed by the government of Venezuela adversely to the government of the United States. Message of the	4	10	1
(*For list of papers accompanying the above, see page 2 of same.*)			
President of the United States, communicating information relative to the extradition of a fugitive from justice, John Anderson, a man of color, harbored by the British authorities in Canada. Message of the	4	11	1
President of the United States, (Mr. Lincoln,) March 4, 1851, (No. 1, Special session.) Inaugural address of the	4	.....	1
Proposals. (See *Navy.*)			
Provisions and clothing. Annual report, with estimates, of the Bureau of	3	1	346
Provisions, clothing, and small stores, &c., condemned on national vessels and at naval stores, at home and abroad, in 1860. Statement of the cost of and loss on	3	1	353
Prussian commerce. (See *Commerce and Navigation.*)			
Prussian mails. (See *Mails.*)			
Public buildings. (See *Buildings.*)			
Public lands. (See *Lands.*)			
Q.			
Quartermaster General of the Army, for the fiscal year ending September 30, 1860. Annual report of the	2	1	233
Quartermaster of the Marine Corps, under advertisement of September 22, 1859. Statement of bids received for supplying rations, wood, and coal, by the	3	1	392, 396
Quartermaster's department of the United States Marine Corps, for rations, clothing, &c. Statement of existing contracts by the	3	1	395
R.			
Railroad. Remarks of the President in relation to the Pacific	1	1	24
Railroads, and approved of in the States of Alabama, Florida, Iowa, Louisiana, Michigan, Minnesota, Mississippi, and Wisconsin. Statements of the quantity of lands granted to	1	1	67
Railroad mail service, as in operation September 30, 1860. Statement of	3	1	494
Receipts and expenditures during the year ending June 30, 1860, and the value of all stores on hand at the several Navy-yards July 1, 1860. Statement of	3	1	239
Receipts and disbursements in closed mails between the United States and Prussia, during the year ending June 30, 1860. Statement of	3	1	553

Subject.	Vol.	No.	Page.
Receipts and expenditures of the Post Office Department, for the year ending June 30, 1860. Statement of	3	1	538, 539
Receipts and expenditures of the post offices in each State and Territory, during the year ending June 30, 1860. Statement of	3	1	540
Registered tonnage. (See *Tonnage*.)			
Registration of letters. (See *Letters*.)			
Representatives in Congress on the same day in all the States of the Union. Recommendation of the President for the election of	1	1	25
Resignations, &c., in the Navy. (See *Navy*.)			
Retrenchments of the Post Office Department. Report in relation to the	3	1	447
Revenue accrued to the United States and to the United States Post Office Department by the Cunard line of steamers, for the year ending June 30, 1860. Statement of the amount of	3	1	551
Rivers. Report of the exploration of the San Juan and headwaters of the Missouri and Yellowstone	2	1	146
Rivers Savannah, near the city of Savannah, and Susquehanna, near Havre-de-Grace, and the Patapsco. Report of improvements of the	2	1	290
River raft. Report in relation to the removal of the Red	2	1	294
River. Report in relation to the improvement of the Des Moines rapids in the Mississippi	2	1	294
River. Report in relation to the improvement of the navigation of the St. Clair flats and St. Mary's	2	1	294, 295
Roads. Remarks of the Secretary of the Interior in relation to the Fort Kearney, South Pass, and Honey Lake, and the El Paso and Fort Yuma wagon government	1	1	46
Road from Fort Benton to Fort Walla-Walla. Report on the construction of the military	2	1	147
Roads in Minnesota, Kansas, and Nebraska, New Mexico, Southern Oregon, Northern Oregon, and Washington Territory. Report in relation to certain military	2	1	295
Russia. Views of the President on the relations between the government of the United States and	1	1	16
Russia. (See *Commercial Relations* and *Commerce and Navigation*.)			
S.			
Sailing vessels of corresponding classes. Statement of the actual cost per annum of maintaining steam vessels of each class as compared with	4	4	32
Saint Clair flats. Report in relation to a beacon and light-house	2	1	294
San Francisco to China. Report of the survey of the route from	3	1	50
San Juan, in the vicinity of Washington Territory, Views of the President in relation to the claim of Great Britain to the island of	1	1	16
Sandwich Islands. (See *Commercial Regulations* and *Commerce and Navigation*.)			
Sardinia. (See *Commerce and Navigation*.)			
Savannah river. (See *River*.)			
Saxony. (See *Commercial Relations*.)			
Screw ships of the Navy, with tonnage and battery, including caliber and weight of broadside, and where built. Statement of the cost of each of the	4	4	54
Seamen and marines in the United States service annually from 1840 to 1860, inclusive. Estimate of the number of	4	4	30
Secession of a State from the general government. Views of the President of the United States on the right of the	1	1	7
Sectional differences existing between the northern and southern citizens of the United States. Views of the President of the United States concerning	1	1	3
Shelton's Island, *alias* Aves or Bird Island, claimed by the government of Venezuela adversely to the claim of the United States. Correspondence in relation to	4	10	1
Ship canal. (See *Canal*.)			
Shipments to the United States naval squadrons on foreign stations during the year ending June 30, 1860. Statement of the value of	3	1	352
Siam. (See *Commercial Relations* and *Commerce and Navigation*.)			

Subject.	Vol.	No.	Page.
Slavery as connected with sectional controversies. Views of the President of the United States in relation to	1	1	4
Slave trade. Remarks of the President in relation to the African	1	1	24
Slave trade. Remarks of the Secretary of the Interior in relation to the laws on the subject of the African	1	1	41
Slavery where it exists in the southern States of the Union, (No. 1, special session.) Views of President Lincoln in relation to the institution of	4	.....	1
Small stores. (See *Navy*.)			
Southern States that by the accession of a Republican administration their property and their peace and personal security are to be endangered, (No. 1, special session.) President Lincoln's remarks in his inaugural address relating to an apprehension existing among the people of the	4	.....	1
South Carolina as an independent State and that of a foreign *de facto* government. Views of the President in relation to the difference between the recognition of	1	1	11
Southwest Executive Building. (See *Estimates*.)			
Spain. Views of the President in relation to the Amistad and Cuban claims against the government of	1	1	16
Spanish Dominions. (See *Commercial Relations* and *Commerce and Navigation*.)			
State and Territory. (See *Commerce of each State, &c.*)			
State from the Union is not a constitutional remedy for supposed evils. Opinion of President Buchanan that the secession of a	1	1	7
State into submission. Views of the President in relation to the power of Congress to coerce a seceding	1	1	11
States and Territories of the United States. Statement of the area in acres and in square miles of the several	1	1	53
State and the ministers at Washington from England, Spain, and Bremen, in relation to foreign vessels in the port of Charleston, South Carolina. Correspondence between Mr. Black, Secretary of	4	5	1
State and others, in relation to Shelton's *alias* Aves or Bird Island, claimed by inhabitants of Venezuela adversely to the claim of the United States. Report with the correspondence between Mr. Marcy, late Secretary of	4	10	1
State and Lord Lyons, the British minister at Washington, and Mr. Dallas, American minister at London, in relation to the extradition of John *alias* Jack Anderson, a colored man charged with murder in the State of Missouri, and who escaped into Canada. Correspondence between Mr. Cass, late, and Mr. Black, present, Secretary of	4	11	1
State, transmitting the annual statement of the commercial relations of the United States with foreign nations for the year ending September 30, 1860, (Parts I and II, in quarto.) Letter of the Secretary of	9	6	1
States of the Zollverein. (See *Commercial Relations* and *Commerce and Navigation*.)			
Steamboat mail service in the several States and in Washington Territory. Statement of	3	1	501
Steam vessels of each class, as compared with sailing vessels of corresponding classes. Statement of the actual cost of maintaining in commission	4	4	32
Statistical view, &c. (See *Commerce*.)			
Steamers. Report of the Board of Naval Officers, in relation to the expediency of converting the sailing vessels of the Navy into war	3	1	32
Steamers. Statement of closed mail account with the several lines of ocean mail	3	1	552
Steamers during the year ending June 30, 1860. Statement of letters and newspapers, with the postages, conveyed by the various lines of ocean	3	1	554
Steen and Lieutenant Mullan, relative to the movement of troops overland to the northern portion of the department of the Pacific, (No. 2, special session.) Communications from Major	4	2	1

Subject.	Vol.	No.	Page.
Superintendent of the Census. Report of the	1	1	501
Surgeon General of the Army for 1860. Annual report of the	2	1	241
Surveyor General of Minnesota for 1860. Annual report of the	1	1	107
Surveyor General of Wisconsin and Iowa. Annual report of the	1	1	119
Surveyor General of Illinois and Missouri. Annual report of the	1	1	125
Surveyor General of Louisiana. Annual report of the	1	1	130
Surveyor General of Florida. Annual report of the	1	1	151
Surveyor General of New Mexico. Annual report of the	1	1	173
Surveyor General of Kansas and Nebraska. Annual report of the	1	1	176
Surveyor General of California. Annual report of the	1	1	198
Surveyor General of Oregon. Annual report of the	1	1	215
Surveyor General of Washington Territory. Annual report of the	1	1	225
Survey of the Mississippi Delta, and the Northern and Northwestern Lakes. Report in relation to the	2	1	292
Surveyors General of the public lands. Reports of the	1	1	107
Surveys of lands in the States of Missouri, Louisiana, Wisconsin, Iowa, Minnesota, California, Oregon, and Territories of Dacotah, Washington, New Mexico, Utah, and the Keys and Islands along the coast of California, with applications for surveys at the foot of the Rocky Mountains. Report of the progress of	1	1	54
Sweden and Norway. (See *Commercial Relations* and *Commerce and Navigation*.)			
Switzerland. (See *Commercial Relations*.)			
Susquehanna river. (See *Rivers*.)			
T.			
Tariff, and the application of specific instead of ad valorem duties. Remarks of the President in favor of a modification of the	1	1	25
Tide on Lake Michigan. (See *Lake Michigan*.)			
Tonnage thereof in the several States and Territories of the United States from 1815 to 1860 inclusive. (Commerce and Navigation Report.) Statement of the number and class of vessels built, and the	8	.....	674
Tonnage of the United States, showing the tonnage employed in the whale fishery; also, the proportion of the enrolled and licensed tonnage employed in the coasting trade, cod, mackerel, and whale fisheries, from 1815 to 1860, inclusive. (Commerce and Navigation Report.) A comparative view of the registered and enrolled	8	.....	670
Tonnage thereof in each State and Territory of the United States. (Commerce and Navigation Report.) Statement of the number and class of vessels built, and the	8	.....	662
Tonnage accounts, showing the comparative amount of tonnage during the year ending June 30, 1860. (Commerce and Navigation Report.) General statement of	8	.....	654
Tonnage of the United States June 30, 1860. (Commerce and Navigation Report.) Recapitulation of the	8	.....	656
Tonnage and crews, which departed from each district of the United States, and the countries to which they cleared, and which entered into each district of the United States, and the countries from which they arrived, during the year ending June 30, 1860. (Commerce and Navigation Report.) Statement of the number of American and foreign vessels, with their	8	.....	564 586
Tonnage of the several districts of the United States on the last day of June, 1860. (Commerce and Navigation Report.) Statement of the	8	.....	650
Tonnage and crews, which cleared from each district of the United States for and which entered into each district of the United States from foreign countries during the year ending June 30, 1860. (Commerce and Navigation Report.) Statement of the number of American and foreign vessels, with their	8	.....	556 560
Tonnage and crews, which cleared from the United States for foreign countries during the year ending June 30, 1860. (Commerce			

Subject.	Vol.	No.	Page.
and Navigation Report.) Statement of the number of American and foreign vessels, with their	8	.....	526
Tonnage and crews, which entered into the United States from foreign countries, and from what foreign countries during the year ending June 30, 1860. (Commerce and Navigation Report.) Statement of the number of American and foreign vessels, with their	8	.....	530
Tonnage of American and foreign vessels arriving from and departing to each foreign country during the year ending June 30, 1860. (Commerce and Navigation Report.) Statistical view of the commerce of the United States, exhibiting the value of exports to and imports from each foreign country, and the	8	.....	548
Topographical Bureau. Annual report of the operations of the	2	1	292
Topographical Bureau. Synopsis of the stations and duties of the several officers attached to the	2	1	298
Totten and the Secretary of War, in relation to an advance of $200 made by him to William Aspinwall for the United States, on account of land purchased of him for fortifications on Staten Island, New York. Correspondence between Brevet Brigadier General Joseph G	2	1	144
Trade of the United States, the countries of production, and of the shipment, with the value of the articles imported during the year ending June 30, 1860. (Commerce and Navigation Report.) General and summary statements exhibiting the indirect	8	.....	610 646
Treasury of the Post Office Department for the fiscal year ending June 30, 1860, showing the revenue account of said department. Report of the Auditor of the	3	1	524
Treasury, transmitting a report of the Register of the Treasury of the commerce and navigation of the United States, for the year ending June 30, 1860. Report of the Secretary of the	8	.....	1
(*See Alliterated Index, and Index to General Statements of the above, at pages* 677 *and* 684 *of same.*)			
Troops overland to the northern portion of the department of the Pacific. (No. 2, special session.) Communications from Major Steen and Lieutenant Mullan, relative to the movement of	4	.....	1
Turkey. (See *Commerce and Navigation.*)			
Turkish Dominions. (See *Commercial Relations.*)			
Tuscany. (See *Commerce and Navigation.*)			
Two Sicilies. (See *Commerce and Navigation.*)			
U.			
Union of the States. Resolutions of the legislature of Virginia, having in view a peaceful settlement of the exciting questions which now agitate and threaten the dissolution of the	4	3	1
Union. (No. 1, special session.) Views of President Lincoln in relation to slavery, and in regard to the apprehensions respecting slave property of that portion of the people of the United States residing in the southern portion of the	4	.....	1
Uruguay. (See *Commerce and Navigation.*)			
Utah. Remarks of the President on the condition of the Territory of	1	1	22
V.			
Vacancy in the office of Secretary of War. Message of the President of the United States respecting the	4	1	1
Venezuela, adversely to the claim of the United States. Correspondence between Mr. Marcy and Mr. Cass, late Secretaries of State, and Mr. Eames and Mr. Turpin, American ministers at Venezuela, and the Venezuelan authorities in relation to Shelton's *alias* Bird or Aves Island, claimed by the government of.	4	10	1
Venezuelan commercial relations. (See *Commercial Relations* and *Commerce and Navigation.*)			
Vessels in commission belonging to the Navy October 31, 1860. Statement of	3	1	235

Subject.	Vol.	No.	Page.
Vessels in ordinary, repairing, equipping, &c. Statement of the names and characters of	3	1	238
Vessels on the stocks and in progress of construction October 31, 1860. Statement of the	3	1	239
Vessels of the Navy, or in receiving or securing stores and material for those purposes. Statement of the number of days' labor, its average per diem cost from June 30, 1859, to June 30, 1860, for the respective navy-yards, for building and equipping	3	1	240
Vessels of the Navy in commission, with their names, class, station, caliber of armament, and total number of guns to each during each year, from 1840 to 1860. Statement of the number of	4	4	4 to 27
Vessels of the Navy annually from 1840 to 1860. Statement of the total amount expended for the equipment and repair of	4	4	31
Vessels and sailing vessels. Statement of the actual and comparative cost per annum of maintaining in commission each class of steam	4	4	32
Vessels in the port of Charleston, South Carolina Correspondence with the ministers of Bremen, England, and Spain, in regard to foreign	4	5	1
Vessels of war, &c. Statement of the number and pay of clerks and watchmen at the naval stations and on board	4	8	1
Vessels during the year ending June 30, 1860. (Commerce and Navigation Report.) Summary statement of the quantity and value of goods, wares, and merchandise imported into the United States in American and foreign	8	.....	294
Vessels, with their tonnage and crews, which cleared from the United States for foreign countries, and to what foreign countries, during the year ending June 30, 1860. (Commerce and Navigation Report.) Statement of the number of American and foreign	8	.....	526
Vessels, with their tonnage and crews, which entered into the United States from foreign countries during the year ending June 30, 1860. (Commerce and Navigation Report.) Statement of the number of American and foreign	8	.....	530
Vessels which entered into and cleared from the United States for foreign countries, and for what foreign countries, during the year ending June 30, 1860. (Commerce and Navigation Report.) Statement of the national character of the foreign	8	.....	534
Vessels arriving from and departing to each foreign country during the year ending June 30, 1860 (Commerce and Navigation Report.) Statistical view of the commerce of the United States, exhibiting the value of the exports to and imports from each foreign country, and the tonnage of American and foreign	8	.....	548
Vessels, and of imports in American and foreign vessels, during the year ending June 30, 1860. (Commerce and Navigation Report.) Statement of the commerce of each State with the value of exports of American and foreign produce in American and foreign	8	.....	552
Vessels, with their tonnage and crews, which cleared from each district of the United States for foreign countries; and, also, which entered into each district of the United States from foreign countries, during the year ending June 30, 1860. (Commerce and Navigation Report.) Statement of American and foreign...	8	.....	556 560
Vessels, with their tonnage and crews, which departed from each district of the United States, and the countries from which they cleared, and which entered into each district of the United States, and the countries from which they arrived, during the year ending June 30, 1860. (Commerce and Navigation Report.) Statement of the number of American and foreign	8	.....	564 586
Vessels built, and the tonnage thereof, in each State and Territory of the United States during the year ending June 30, 1860. (Commerce and Navigation Report.) Statement, with recapitulation, of the number and class of	8	.....	662
Vessels built, and the tonnage thereof, in the several States and Territories of the United States, from 1815 to 1860, inclusive.			

Subject.	Vol.	No.	Page.
(Commerce and Navigation Report.) Statement showing the number and class of	8	.....	674
Virginia, having in view a peaceful adjustment of the exciting questions which now agitate and threaten the dissolution of the Union. Resolution of the Legislature of the State of	4	3	1
W.			
Wagon roads. (See *Roads.*)			
Warden of the Penitentiary in the District of Columbia. Annual reports of the clerk, physician, matron, chaplain, and	1	1	505
War steamers. (See *Steamers.*)			
War, showing the operations of the War Department during the year 1860. Annual report of the Secretary of. (*See list of papers accompanying the above report at page 13 of the same.*)	2	1	1
War and Brevet Brigadier General Totten, in relation to an advance made by him for the United States to Wm. Aspinwall, for land for fortifications on Staten Island, New York. Correspondence between the Secretary of	2	1	144
War. Message of the President of the United States respecting the vacancy in the office of Secretary of	4	2	1
War, communicating a list of clerks and other civil officers employed in that department, with the amount of their salaries, during the year 1860. Report of the Secretary of	4	12	1
War, transmitting a communication from Major Steen and Lieutenant Mullan, relative to the movement of troops overland to the northern portion of the department of the Pacific. (No. 2, special session.) Report of the Secretary of	4	2	1
War, transmitting Lieutenant Michler's report of his survey for an interoceanic canal near the Isthmus of Darien. Report of the Secretary of	7	9	1
Washington Infirmary. (See *Infirmary.*)			
Water works. Report of the Engineer of the Potomac	1	1	564
Whale fishery. (See *Fisheries.*)			
Wright, Major Steen, and Lieutenant Mullan, relative to the movement of troops overland to the northern portion of the department of the Pacific. (No. 2, special session.) Communication from Colonel	4	2	1
Y.			
Yards and Dock. Annual report of the Bureau of	3	1	55
Yellowstone river. (See *River.*)			
Z.			
Zollverien, (Part I.) Statement of the commercial relations, &c., of the United States with the States of the	9	6	324

TABLE

OF

EXECUTIVE DOCUMENTS

PRINTED BY ORDER OF

THE SENATE OF THE UNITED STATES,

SECOND SESSION OF THE THIRTY-SIXTH CONGRESS,

1860-61.

Subject.	Vol.	No.	Page.
Messages from the President of the United States, viz:			
On the state of the Union	1	1	1
Respecting the vacancy in the office of Secretary of War	4	2	1
Submitting to Congress a series of resolutions adopted by the legislature of Virginia, January 19, 1861, having in view a peaceful settlement of the exciting questions which now threaten the Union	4	3	1
Transmitting the correspondence with foreign ministers at Washington, in regard to foreign vessels in the port of Charleston, South Carolina	4	5	1
Transmitting correspondence respecting the Island of Aves, in the Caribbean sea	4	10	1
List of papers accompanying the above, viz:			
Messrs. Sampson & Tappan and Shelton to Mr. Marcy, January 15, 1855	4	10	5
Same to same, January 29, 1855	4	10	6
Mr. Marcy to Messrs. Sampson & Tappan and Shelton, January 31, 1855	4	10	7
Mr. Shelton to Mr. Marcy, February 26, 1855	4	10	8
Mr. Marcy to Mr. Shelton, March 2, 1855	4	10	9
Mr. French to Mr. Marcy, (inclosure,) May 5, 1855	4	10	10
Same to same, (inclosures,) May 12, 1855	4	10	10
Mr. Shelton to Mr. Marcy, May 14, 1855	4	10	16
Mr. Marcy to Mr. Shelton, June 14, 1855	4	10	25
Mr. Shelton to Mr. Marcy, June 20, 1855	4	10	26
Mr. French to same, June 22, 1855	4	10	39
Mr. Shelton to same, (inclosures,) June 24, 1855	4	10	40
Mr. French to same, June 26, 1855	4	10	73
Same to same, (inclosures,) June 30, 1855	4	10	73
Same to same, December 17, 1855	4	10	77
Mr. Marcy to Mr. French, December 20, 1855	4	10	77
Mr. Sanford to the President, December 24, 1855	4	10	78
Same to Mr. Marcy, January 3, 1856	4	10	81
Mr. Marcy to Mr. Shelton, January 4, 1856	4	10	82
Mr. Sanford to the President, (inclosure,) January 5, 1855	4	10	82
Same to Mr. Marcy, January 5, 1856	4	10	84
Mr. Marcy to Mr. Sanford, January 7, 1856	4	10	84
Same to same, January 9, 1856	4	10	85

Subject.	Vol.	No.	Page.
Aves Island correspondence—List of papers—Continued.			
Mr. Sanford to Mr. Marcy, January 12, 1856	4	10	85
Same to the President, (inclosures,) January 13, 1856	4	10	91
Mr. Sanford to same, January 16, 1856	4	10	93
Mr. Marcy to Mr. Shelton, January 19, 1856	4	10	93
Mr. French to Mr. Marcy, (inclosure,) January 21, 1856	4	10	94
Mr. Thomas to Mr. French, January 22, 1856	4	10	96
Mr. Marcy to Mr. Sanford, January 25, 1856	4	10	96
Mr. Sanford to Mr. Marcy, (inclosure,) February 1, 1856	4	10	96
Mr. Marcy to Mr. Sanford, February 6, 1856	4	10	102
Mr. Sanford to Mr. Marcy, February 12, 1856	4	10	99
Same to same, February 20, 1856	4	10	102
Mr. Sanford to Mr. Marcy, (inclosures,) March 8, 1856	4	10	103
Mr. Marcy to Mr. Sanford, March 24, 1856	4	10	109
Mr. Sanford to Mr. Marcy, April 14, 1856	4	10	111
Same to the President, (inclosures,) April 14, 1856	4	10	111
Mr. Marcy to Mr. Sanford, April 17, 1856	4	10	127
Mr. Sanford to Mr. Marcy, (inclosure,) April 19, 1856	4	10	128
Mr. Marcy to Mr. Sanford, May 1, 1856	4	10	131
Mr. Sanford to Mr. Marcy, May 9, 1856	4	10	132
Same to same, (inclosures,) May 10, 1856	4	10	132
Mr. Marcy to Mr. Sanford, May 16, 1856	4	10	135
Mr. French to Mr. Marcy, June 15, 1856	4	10	136
Mr. Sanford to same, June 30, 1856	4	10	137
Same to same, (inclosure,) July 3, 1856	4	10	140
Mr. Marcy to Mr. Sanford, July 7, 1856	4	10	143
Mr. Thomas to same, July 8, 1856	4	10	143
Mr. Sanford to Mr. Thomas, July 11, 1856	4	10	144
Same to Mr. Marcy, July 15, 1856	4	10	145
Mr. Marcy to Mr. Sanford, July 21, 1856	4	10	146
Sampson & Tappan and Shelton to Mr. Marcy, July 21, 1856	4	10	147
Mr. Sanford to the same, (inclosure,) August 11, 1856	4	10	149
Mr. Eames to same, (inclosure,) October 9, 1856	4	10	152
Mr. Sanford to the President, December 14, 1856	4	10	156
Same to Mr. Marcy, December 16, 1856	4	10	157
Mr. Marcy to Mr. Sanford, December 23, 1856	4	10	158
Mr. Sanford to Mr. Marcy, December 27, 1856	4	10	159
Mr. Eames to same, (inclosure,) January 7, 1857	4	10	162
Mr. Marcy to Mr. Sanford, January 9, 1857	4	10	168
Mr. Sanford to Mr. Marcy, January 10, 1857	4	10	168
Same to same, (inclosure,) January 22, 1857	4	10	169
Same to same, (inclosure,) January 26, 1857	4	10	173
Mr. Shelton to Mr. Marcy, January 31, 1857	4	10	180
Mr. Marcy to Mr. Shelton, February 3, 1857	4	10	181
Same to Mr. Sanford, February 3, 1857	4	10	180
Same to Mr. Eames, (inclosure,) February 3, 1857	4	10	181
Mr. Eames to Mr. Marcy, February 28, 1857	4	10	196
Mr. Cass to Mr. Eames, April 1, 1857	4	10	197
Mr. Eames to Mr. Cass, (inclosure,) April 1, 1857	4	10	198
Same to Mr. Eames, April 3, 1857	4	10	226
Mr. Cass to Mr. Eames, May 25, 1857	4	10	227
Mr. Eames to Mr. Cass, (inclosure,) June 13, 1857	4	10	228
Mr. Sanford to same, (inclosure,) August 10, 1857	4	10	235
Same to same, (inclosure,) August 16, 1857	4	10	242
Mr. Cass to Mr. Eames, August 31, 1857	4	10	272
Mr. Sanford to Mr. Cass, (inclosure,) August 31, 1857	4	10	275
Mr. Appleton to Mr. Sanford, September 4, 1857	4	10	276
Mr. Cass to Mr. Eames, September 4, 1857	4	10	276
Mr. Ribas to Mr. Cass, September 4, 1857	4	10	277
Mr. Cass to Mr. Ribas, September 11, 1857	4	10	278
Mr. Ribas to Mr. Cass, September 18, 1857	4	10	279
Mr. Gutierrez to same, September 21, 1857	4	10	280
Mr. Sanford to same, September 29, 1857	4	10	282
Mr. Cass to Mr. Eames, October 6, 1857	4	10	283
Mr. Eames to Mr. Cass, (inclosure,) October 31, 1857	4	10	283

Subject.	Vol.	No.	Page.
Messages from the President of the United States—Aves Island Correspondence—Continued.			
Mr. Gutierrez to Mr. Cass, (inclosure,) October 31, 1857	4	10	287
Mr. Eames to same, (inclosure,) November 3, 1857	4	10	372
Mr. Cass to Mr. Gutierrez, November 12, 1857	4	10	374
Mr. Eames to Mr. Cass, (inclosures,) December 3, 1857	4	10	375
Mr. Cass to Mr. Eames, December 15, 1857	4	10	380
Mr. Shelton to Mr. Cass, December 17, 1857	4	10	381
Mr Cass to Mr. Briceño, February 24, 1858	4	10	381
Mr. Briceño to Mr. Cass, February 24, 1858	4	10	384
Mr. Eames to same, (inclosure,) February 24, 1858	4	10	382
Mr. Cass to Mr. Briceño, February 26, 1858	4	10	384
Mr. Briceño to Mr. Cass, February 27, 1858	4	10	385
Mr. Cass to Mr. Briceño, March 4, 1858	4	10	389
Mr. Briceño to Mr. Cass, March 4, 1858	4	10	391
Same to same, March 8, 1858	4	10	391
Mr. Eames to same, (inclosure,) March 25, 1858	4	10	394
Mr. Briceño to same, (inclosure,) April 7, 1858	4	10	396
Mr. Sanford to same, April 13, 1858	4	10	420
Mr. Briceño to same, April 25, 1858	4	10	423
Mr. Cass to Mr. Briceño, April 27, 1858	4	10	423
Mr. Cass to Venezuelan Minister of Foreign Relations, May 10, 1858	4	10	424
Same to Mr. Eames, May 10, 1858	4	10	425
Mr. Eames to Mr. Cass, (inclosure,) May 13, 1858	4	10	427
Mr. Sanford to same, May 22, 1858	4	10	428
Mr. Eames to same, (inclosure,) July 7, 1858	4	10	435
Mr. Cass to Mr. Sanford, July 31, 1858	4	10	440
Mr. Appleton to Mr. Turpin, August 24, 1858	4	10	441
Messrs. Cotting & Lang to Mr. Cass, August 31, 1858	4	10	443
Mr. Cass to Mr. Turpin, September 3, 1858	4	10	444
Mr. Sanford to Mr. Cass, September 8, 1858	4	10	444
Mr. Cass to Mr. Turpin, September 15, 1858	4	10	446
Mr. Appleton to Mr. Sanford, September 27, 1858	4	10	446
Mr. Turpin to Mr. Cass, (inclosure,) October 23, 1858	4	10	447
Same to same, (inclosure,) December 1, 1858	4	10	450
Mr. Sanford to same, December 9, 1858	4	10	452
Mr. Cass to Mr. Turpin, December 10, 1858	4	10	453
Mr. Sanford to Mr. Cass, (inclosures,) January 14, 1859	4	10	454
Mr. Appleton to Mr. Turpin, January 22, 1859	4	10	455
Mr. Cass to same, February 7, 1859	4	10	456
Mr. Turpin to Mr. Cass, (inclosure,) February 8, 1859	4	10	456
Mr. Appleton to Mr. Sanford, March 4, 1859	4	10	461
Mr. Sanford to Mr. Appleton, April 8, 1859	4	10	461
Mr. Sanford to Mr. Cass, October 17, 1859	4	10	470
Mr. Cass to Mr. Sanford, October 22, 1859	4	10	472
Transmitting information relative to the extradition of one John *alias* Jack Anderson, charged with murder in the State of Missouri, and who fled to Canada, a British province	4	11	1
Inaugural address of President Lincoln, March 4, 1861, (No. 1, special session)	4	1	1
Reports of the Secretary of State, viz:			
Transmitting the annual statement of the commercial relations of the United States with foreign countries, for the year ending September 30, 1860, in two parts	9	6	1
Contents of Part I:			
British Dominions—			
General resumé of the commercial relations between England and the United States, in 1860	9	6	3
London. Commercial statistics	9	6	14
Liverpool. "Protections," &c	9	6	17
Manchester. "Protections," &c.	9	6	19

Subject.	Vol.	No	Page.
Annual statement of commercial relations—Continued.			
British Dominions—Continued.			
Leeds. "Protections," commercial changes, and annual report for 1860	9	6	19
Plymouth. Annual report for 1860	9	6	24
Falmouth. Mining statistics and American trade at	9	6	25
Scotland—			
Leith. Commercial statistics	9	6	26
Glasgow. "Protections"	9	6	26
Dundee. Annual report and general statistics	9	6	27
Ireland—			
Dublin. Annual report for 1860	9	6	31
Galway. Navigation statistics	9	6	35
Possessions and dependencies—			
Malta	9	6	36
Mauritius. General and sugar statistics	9	6	36
Calcutta. Commercial statistics	9	6	40
Singapore. General information	9	6	44
Sydney. General information	9	6	45
Melbourne. Commercial statistics	9	6	51
Hobart Town. "Foreign seaman's act"	9	6	54
Bay Islands. "Foreign seaman's act"	9	6	58
Cape Town. Commercial statistics	9	6	60
Port Elizabeth. Quarter's exports, September 30, 1860	9	6	63
Zante. Commercial statistics	9	6	64
Montreal. "Protections"	9	6	68
Halifax. "Protections"	9	6	69
Pictou. General commercial statistics	9	6	70
Sydney, (N. S.)	9	6	75
Kingston. General statistics	9	6	79
Bahamas. Trade of 1859 with the United States	9	6	79
Nassau. Annual report	9	6	80
Turk's Island. Annual report	9	6	83
Barbadoes. Annual report	9	6	87
British Guiana—			
Georgetown. Postal ordinance	9	6	88
Demerara. General information	9	6	89
Falkland Islands—			
Stanley. General information	9	6	90
Canton. Biennial reports, June 30, 1860	9	6	91
French Dominions—			
Resumé of our commercial relations with France	9	6	93
Havre. "Protections." General and annual report	9	6	122
Bordeaux. Decree, &c	9	6	134
La Rochelle. General commercial information	9	6	135
Lyons. Commercial statistics and general information	9	6	136
Nantes. Annual report	9	6	148
Society Islands. General commercial information	9	6	152
Spanish Dominions—			
Cadiz. General trade reports	9	6	159
Malaga. General commercial information	9	6	159
Port Mahon	9	6	170
Cuba—			
Havana. "Protections." General and annual reports, decrees, &c	9	6	170
Matanzas. Trade reports. Annual report	9	6	180
St. Jago de Cuba. Annual report	9	6	186
Porto Rico—			
San Juan. "Protections." General and annual reports, decrees, &c	9	6	187
Ponce. Tonnage regulations	9	6	206
Portuguese Dominions—			
Oporto. General custom-house tariff	9	6	207
Fayal. "Protections." Commercial statement	9	6	229

Subject.	Vol.	No.	Page.
Annual statement of commercial relations—Continued.			
Holland and possessions—			
General trade of	9	6	232
Batavia. Commercial regulations and tariff	9	6	232
Paramaribo. Annual report	9	6	239
Belgium—			
Commercial relations with the United States	9	6	242
Antwerp. General and annual reports	9	6	247
Ghent	9	6	251
Denmark and possessions—			
Elsinore. General commercial reports	9	6	252
St. Thomas. Annual report	9	6	253
Sweden and Norway—			
Resumé of our commercial relations with	9	6	254
Stockholm. First, General commercial reports; second, Fisheries on the Coasts of Norway	9	6	255
Gottenberg. General reports	9	6	257
Russia—			
Resumé of our commercial relations with	9	6	259
St. Petersburg. General and annual reports	9	6	261
Moscow. Cotton statistics	9	6	265
Revel. General reports	9	6	267
Odessa. General and annual reports	9	6	277
Amoor river. General and annual reports	9	6	286
Austria—			
Vienna. General and annual reports	9	6	306
Trieste. General and annual reports	9	6	317
States of the Zollverein—			
Resumé of commercial relations with foreign nations	9	6	324
Stettin	9	6	325
Bavaria. Annual report, &c	9	6	325
Saxony—			
Leipsic. General commercial reports	9	6	329
Wurtemberg. General resumé	9	6	330
Baden. General reports	9	6	331
Hesse Cassel. General commercial reports	9	6	333
Nassau General commercial reports	9	6	337
Frankfort-on-the-Main. General and special reports	9	6	
Hanse Towns—			
Hamburg	9	6	355
Bremen. General summary. "Protections"	9	6	356
Switzerland—			
Basle. General and annual reports	9	6	376
Zurich. General and special reports. Silk and cotton manufactories	9	6	384
Italian States—			
Genoa. General reports	9	6	386
Naples. Commercial reports	9	6	386
Palermo. General and annual reports	9	6	387
Turkish Dominions—			
Constantinople. Commercial statistics. Regulations of navigation, &c	9	6	390
Beirut. General information	9	6	394
Japan—			
Treaty with	9	6	395
Yeddo. General information	9	6	403
Nagasaki. Commercial information	9	6	404
Hakodadi. General commercial information	9	6	404
Siam—			
Resumé of commercial relations with. Treaty, &c	9	6	408
Bankok. General commercial reports	9	6	416
China—			
Shanghai. General commercial regulations. Reports	9	6	420
Foo-choo-Foo. Commercial statistics	9	6	426
Amoy. General annual reports	9	6	427

Subject.	Vol.	No.	Page.
Annual statement of commercial relations—Continued.			
Sandwich Islands—			
Lahaina. General reports	9	6	430
Feejee Islands—			
Lanthala. Commercial statistics	9	6	446
Dominican Republic—			
City of Domingo. Annual report. Decree	9	6	447
Mexico—			
Vera Cruz. General commercial reports	9	6	448
Matamoras. General annual reports	9	6	451
Minatitlan. Annual report	9	6	453
Nicaragua—			
San Juan del Sur. General report	9	6	456
Costa Rica—			
San José. General commercial report	9	6	458
New Granada—			
Panama. Annual report. Panama railroad, &c	9	6	459
Carthagena. General report	9	6	460
Venezuela—			
Ciudad Bolivar. Commercial statement	9	6	461
Puerto Cobello. General report	9	6	461
Laguayra. Annual report	9	6	462
Ecuador—			
Guayaquil. Commercial statement	9	6	464
Bolivia—			
Cobija. General report	9	6	465
Brazil—			
Rio de Janeiro. General commercial report	9	6	467
Pernambuco. General commercial reports	9	6	473
Maranham. General commercial reports	9	6	474
Santos. General commercial information	9	6	480
Peru—			
Para. General commercial report	9	6	482
Callao. General commercial report	9	6	483
Argentine Confederation—			
Buenos Ayres. Commercial changes	9	6	488
Paraguay—			
Asuncion. General commercial information	9	6	489
Contents of Part II:			
(The following is a list of countries and of the ports in each country from which Consular Returns of Commerce and Navigation will be found in the tables.)			
British Dominions—			
Akyab	9	6	43
Antigua	9	6	69
Barbados	9	6	68
Bathurst	9	6	37
Bay of Islands	9	6	51
Belfast	9	6	29
Bermuda	9	6	59
Bombay	9	6	39
Bristol	9	6	13
Calcutta	9	6	41
Cape Town	9	6	33
Cardiff	9	6	15
Cork	9	6	27
Demarara	9	6	77
Dublin	9	6	27
Dundee	9	6	27
East Harbor	9	6	66
Falmouth	9	6	21
Gibraltar	9	6	30

Subject.	Vol.	No.	Page.
Annual Statement of Commercial Relations—Continued.			
British Dominions—Continued—			
Glasgow	9	6	25
Gloucester	9	6	20
Grand Turk	9	6	63
Halifax	9	6	54
Harbor Island	9	6	62
Hobart Town	9	6	51
Hong Kong	9	6	45
Inagua	9	6	62
Kingston, Jamaica	9	6	74
Leith	9	6	26
Liverpool	9	6	9
London	9	6	3
Londonderry	9	6	29
Malta	9	6	31
Mauritius	9	6	37
Melbourne	9	6	46
Milford Haven	9	6	21
Montreal	9	6	52
Nassau, New Providence	9	6	60
Newcastle, New South Wales	9	6	50
Newcastle-upon-Tyne	9	6	24
Newport	9	6	18
Penang	9	6	43
Pictou, Nova Scotia	9	6	55
Plymouth	9	6	23
Point de Galle	9	6	40
Port Adelaide	9	6	51
Port Elizabeth	9	6	35
Port of Spain	9	6	72
Prince Edward's Island	9	6	53
Quebec	9	6	52
Salt Cay	9	6	65
Simons Town	9	6	36
Singapore	9	6	43
St. Christopher	9	6	67
St. Helena	9	6	31
St. John's, New Brunswick	9	6	56
St. John's, Newfoundland	9	6	53
Stanley, Falkland Islands	9	6	52
Swansea	9	6	20
Sychelles	9	6	38
Sydney	9	6	48
Waterford	9	6	30
West Caicos	9	6	66
French Deminions—			
Bordeaux	9	6	82
Cette	9	6	84
Guadaloupe	9	6	88
Havre	9	6	78
La Rochelle	9	6	84
Marseilles	9	6	85
Martinique	9	6	89
Nantes	9	6	83
Tahita	9	6	90
Toulon	9	6	88
Spanish Dominions—			
Alicante	9	6	95
Almeria	9	6	94
Cadiz	9	6	91
Cardenas	9	6	109
Cienfuegos	9	6	121
Denia	9	6	95
Guayama	9	6	125

Subject.	Vol.	No.	Page.
Annual Statement of Commercial Relations—Continued.			
Spanish Dominions—Continued—			
Havana	9	6	96
Malaga	9	6	92
Manilla	9	6	132
Matanzas	9	6	103
Mayaguez	9	6	129
Nuevitas	9	6	117
Ponce	9	6	127
Port Mahon	9	6	96
Sagua la Grande	9	6	116
St. Jago de Cuba	9	6	117
San Juan de los Remedios	9	6	117
St. John's, Porto Rico	9	6	124
Trinidad de Cuba	9	6	119.
Portuguese Dominions—			
Fayal	9	6	134
Funchal	9	6	134
Lisbon	9	6	133
Macao	9	6	136
Oporto	9	6	134
Porto Praya	9	6	137
St. Paul de Loanda	9	6	135
Belgium—			
Antwerp	9	6	138
Dominions of the Netherlands—			
Amsterdam	9	6	141
Batavia	9	6	146
Curaçoa	9	6	142
Padang	9	6	147
Paramaribo	9	6	145
Rotterdam	9	6	140
St. Martin's	9	6	143
Hanse Towns—			
Bremen	9	6	148
Hamburg	9	6	149
Danish Dominions—			
Christianstadt	9	6	156
Copenhagen	9	6	150
Elsinore	9	6	151
Frederickstadt	9	6	157
St. Thomas	9	6	152
Sweden and Norway—			
Gothenburg	9	6	158
Stockholm	9	6	157
Russia—			
Cronstadt	9	6	159
Prussia—			
Stettin	9	6	160
Austria—			
Treiste	9	6	160
Venice	9	6	162
Sardinia—			
Genoa	9	6	162
Spezzia	9	6	164
Tuscany—			
Leghorn	9	6	164
Two Sicilies—			
Messina	9	6	165
Naples	9	6	165
Palermo	9	6	167
Turkey—			
Constantinople	9	6	169
Smyrna	9	6	169
Ionian Islands—			
Zante	9	6	170

Subject.	Vol.	No.	P
Annual Statement of Commercial Relations—Continued.			
Liberia—			
Monrovia	9	6	171
Muscat—			
Zanzibar	9	6	172
Siam—			
Bankok	9	6	173
China—			
Amoy	9	6	175
Canton	9	6	174
Foo-choo	9	6	176
Ningpo	9	6	177
Shanghae	9	6	179
Swatow	9	6	181
Japan—			
Kanagawa	9	6	182
Nagasaki	9	6	182
Sandwich Islands—			
Hilo	9	6	188
Honolulu	9	6	183
Lahaina	9	6	187
Friendly Islands—			
Apia	9	6	189
Dominican Republic—			
Porto Plata	9	6	190
St. Domingo City	9	6	190
Hayti—			
Aux Cayes	9	6	193
Cape Haytien	9	6	192
Gonavies	9	6	191
Port au Prince	9	6	191
Mexico—			
Acapulco	9	6	195
Minatitlan	9	6	197
Mazatlan	9	6	197
Tobasco	9	6	196
Tampico	9	6	194
Vera Cruz	9	6	193
Honduras—			
Omoa	9	6	199
Truxillo	9	6	199
Nicaragua—			
San Juan del Norte	9	6	199
San Juan del Sur	9	6	200
New Granada—			
Aspinwall	9	6	200
Carthagena	9	6	206
Panama	9	6	204
Rio Hacha	9	6	207
Sabanilla	9	6	205
Santa Martha	9	6	207
Venezuela—			
Ciudad Bolivar	9	6	209
Laguayra	9	6	210
Maracaibo	9	6	208
Puerto Cabello	9	6	208
Ecuador—			
Guayaquil	9	6	210
Brazil—			
Bahia	9	6	217
Maranham	9	6	217
Para	9	6	216
Pernambuco	9	6	213
Rio Grande do Sul	9	6	219

Subject.	Vol.	No.	Pag
Annual Statement of Commercial Relations—Continued.			
Brazil—Continued—			
Rio de Janeiro	9	6	
Santos	9	6	
Peru—			
Arica	9	6	
Callao	9	6	
Paita	9	6	
Tumbez	9	6	
Chili—			
Talcahuano	9	6	
Valparaiso	9	6	
Bolivia—			
Cobija	9	6	
Argentine Confederation—			
Buenos Ayres	9	6	
Rorsario	9	6	
Uruguay—			
Montevideo	9	6	
Reports of the Secretary of the Treasury, viz :			
Transmitting a report from the Register of the Treasury of the commerce and navigation of the United States for the year ending June 30, 1860. (Commerce and Navigation Report.)	8	.....	
Index to the general statements accompanying the above report :			
1. Exports of domestic produce	8	.....	
2. Summary of the same	8	.....	
3. Exports of foreign merchandise	8	.....	
4. Summary of the same	8	.....	
5. Imports of foreign merchandise	8	.....	
6. Summary of the same	8	.....	
7. Exports of domestic produce by districts	8	.....	
8. Exports of foreign merchandise by districts	8	.....	
9. Imports of foreign merchandise by districts	8	.....	
10. Tonnage of American and foreign vessels cleared	8	.....	
11. Tonnage of American and foreign vessels entered	8	.....	
12. Tonnage and national character of foreign vessels entered and cleared	8	.....	
13. Statistical view of the commerce of the United States	8	.....	
14. Statistical view of the commerce of each State and Territory	8	.....	
15. Tonnage of American and foreign vessels cleared from each district	8	.....	
16. Tonnage of American and foreign vessels entered into each district	8	.....	
17. Countries to which American and foreign vessels cleared from each district	8	.....	
18. Countries from which American and foreign vessels arrived in each district	8	.....	
19. Imports indirect	8	.....	
20. Summary of same	8	.....	
21. Tonnage of the several districts of the United States	8	.....	
22. Condensed view of the tonnage of the several districts of the United States	8	.....	
23. Number and class of vessels built during the year 1860	8	.....	
24. Comparative view of the registered and enrolled tonnage from 1815 to 1860	8	.....	
25. Number and class of vessels built from 1815 to 1860	8	.....	
Reports of the Secretary of the Interior, viz :			
On the operations of the Interior Department during the year ending June 30, 1860	1	1	

Subject.	Vol.	No.	Page.
Reports of the Secretary of War, viz:			
On the operations of the War Department during the year ending June 30, 1860	2	1	1
List of papers accompanying the above, viz:			
Operations in the military department of the West	2	1	13
Operations in the military department of Texas	2	1	18
Operations in the military department of New Mexico	2	1	51
Operations in the military department of Utah	2	1	69
Operations in the military department of California	2	1	107
Operations in the military department of Oregon	2	1	117
Statement in relation to money advanced by General Totten	2	1	144
Annual report of the Office of Explorations and Surveys	2	1	146
Annual report on the Capitol Extension	2	1	172
Annual report on the new dome	2	1	178
Annual report on the Post Office Extension	2	1	180
Annual report of the Adjutant General	2	1	189
Annual report of the Quartermaster General	2	1	233
Annual report of the Commissary General	2	1	237
Annual report of the Paymaster General	2	1	238
Annual report of the Surgeon General	2	1	241
Annual report of the Engineer Bureau	2	1	253
Annual report of the Topographical Bureau	2	1	291
Annual report of the Chief of the Ordnance Office	2	1	961
Transmitting a list of clerks and other civil officers employed in the War Department during the year 1860	4	12	1
Transmitting communications from Major Steen, Lieutenant Mullan, and Colonel Wright, relative to the movement of troops overland to the northern portion of the department of the Pacific. (No. 2, special session.)	4	2	1
Transmitting Lieutenant Michler's report of a survey for an interoceanic ship canal near the Isthmus of Darien	7	9	1
Reports of the Secretary of the Navy, viz:			
On the operations of the Navy Department during the year ending June 30, 1860	3	1	1
List of papers accompanying the Annual Report of the Secretary of the Navy, December 1, 1860:			
List of deaths, resignations, and dismissions since the last annual report	3	1	23
Report of the board of officers appointed to witness the examination of acting midshipmen, and to examine into the state of the police, discipline, and general management of the Naval Academy, Annapolis	3	1	27
Report of the summer's cruise of the practice-ship Plymouth, Commander T. T. Craven	3	1	28
Report of the board of officers appointed to examine the sailing vessels of the Navy, in order to determine the expediency of converting them into efficient war steamers	3	1	32
Preliminary reports of Captain Frederick Engle, chief; Lieutenant William A. Jeffers, hydrographer; Lieutenant James St. Clair Morton, topographer; and Dr. John Evans, geologist of the Chiriqui surveying expedition	3	1	36
Report of Captain Cadwalader Ringgold of the progress made in reducing the notes, surveys, &c., made under his direction whilst in command of the North Pacific and Behring's Straits expedition	3	1	44
Report of Commander John Rodgers of the progress made during the year, and the present condition, &c., of the work, of the North Pacific and Behring's Straits expedition under his charge	3	1	48

Subject.	Vol.	No.	Page.
Reports of the Secretary of the Navy—Continued.			
List of papers—Continued—			
Report of Lieutenant James M. Gilliss, conductor of the late astronomical expedition to Chili, of the progress made during the year, and present condition, &c., of the work under his charge	3	1	49
Report of Lieutenant John M Brooke of the progress made in preparing his report of the survey of the route from San Francisco to China	3	1	50
Estimates of the office of the Secretary of the Navy and the Southwest Executive Building	3	1	52
Report and detailed estimates, &c., of the Bureau of Yards and Docks	3	1	55
Report and detailed estimates, &c., of the Bureau of Ordnance and Hydrography	3	1	206
Report and detailed estimates, &c., of the Bureau of Construction, Equipment, and Repairs	3	1	230
Report and detailed estimates, &c., of the Bureau of Provisions and Clothing	3	1	346
Report and detailed estimates, &c., of the Bureau of Medicine and Surgery	3	1	371
Report of the commandant of the Marine Corps and detailed estimates of the paymaster and quartermaster of the corps	3	1	382
General estimate (civil) of the Secretary's office and bureaus of the Navy Department	3	1	398
General estimate of the Southwest Executive Building	3	1	398
Summary of Navy estimates	3	1	399
General estimate for Navy proper	3	1	402
General estimate for Marine Corps	3	1	403
General estimate for special objects under the control of the department	3	1	404
Comptroller's statement of Navy appropriations, expenditures, and balances	3	1	405
Abstract of expenditures under the head of "contingent expenses of the Navy," as settled and allowed at the office of the Fourth Auditor of the Treasury from July 1, 1858, to June 30, 1859	3	1	410
Communicating information concerning the number and character of ships in commission, with their batteries and stations; the number of seamen and marines in service; amount expended for equipment and repair during each year from 1840 to 1860, inclusive; the cost of maintaining in commission and the wear and tear of the different classes of steam vessels of war as compared with corresponding classes of sailing vessels; the average cost of giving steam power to sailing vessels; cost of each of the steam screw ships of the Navy; of dismantling and placing in ordinary the five screw frigates and sloops last returned from cruises of two years or more; the number and location of private and public establishments, at which machinery for said vessels may be constructed, &c.; the total cost of the machinery of a steam frigate constructed by contract at private and one of the same class at the Washington navy-yard; and whether the interests of the government would be subserved by reducing the number of navy-yards; and, if so, which of them could be most advantageously dispensed with	4	4	1
Transmitting a statement of the number and pay of clerks and watchmen at the naval stations on board of vessels of war, &c.	4	8	1
Transmitting information relative to changing the daily pay of master workmen at the navy-yards to salaries, &c.	4	13	1

Subject.	Vol.	No.	Page.
Reports from the Postmaster General, viz :			
On the operations of the Post Office Department during the year ending June 30, 1860	3	1	417
SUBORDINATE DEPARTMENTS.			
Reports of the Commissioner of the General Land Office, viz :			
On the operations of the General Land Office during the year ending June 30, 1860, with an abstract thereof at page 79 of same	1	1	49
Schedule of papers accompanying the above.			
Statement of surveying operations from October 1, 1859, to September 30, 1860	1	1	81
Exhibit of the quantities of land prepared for market and offered at public sale during the fiscal year ending June 30, 1859, and for the quarter ending September 30, 1860	1	1	82
Table of sales and other disposals of public lands during the five quarters ending September 30, 1860	1	1	83
Swamp land table, exhibiting the quantity of land selected under acts of 1849 and 1850, to September 30, 1860	1	1	84
Like table exhibiting the quantity of land approved under same acts up to same date	1	1	85
Table showing the quantity of land patented to the several States under swamp land act of September 28, 1850	1	1	86
Condition of the bounty land business under acts of 1847, 1850, 1852, and 1855	1	1	87
Statement of sales of public lands during the first and last halves of the fiscal year ending June 30, 1860	1	1	88 94
Estimate of appropriations for salaries and contingent expenses in General Land Office during fiscal year ending June 30, 1862	1	1	100
Estimate of appropriations for the surveying department	1	1	103
Like estimate for surveying public lands	1	1	106
Reports of surveyors general	1	1	107
Reports of the Commissioner of Indian Affairs, viz :			
On the operations of the Office of Indian Affairs during the year ending June 30, 1860	1	1	235
List of documents accompanying the report of the Commissioner of Indian Affairs for the year 1860.			
New York agency—			
Report of Bela H. Colegrove, agent for the Indians in the State of New York	1	1	255
Michigan agency—			
Report of A. M. Fitch, agent for the Indians in the State of Michigan	1	1	256
Agency for the Indians in the vicinity of Green Bay—			
Report of A. D. Bonesteel, agent for the Indians in that vicinity	1	1	259
Report of E. A. Goodnough, teacher to the first Christian party of Oneidas	1	1	260
Report of David Lewis, teacher to the Oneidas	1	1	261
Report of Jeremiah Slingerland, teacher to the Stockbridges and Munsees	1	1	262
Report of Sarah J. Slingerland, teacher to the Stockbridges and Munsees	1	1	263
Report of Rosalie Dousman, teacher to the Menomonees	1	1	263
Report of Jane Dousman, teacher to the Menomonees	1	1	264
Report of L. Goldstucker, teacher to the Menomonees	1	1	264

Subject.	Vol.	No.	Page.
Reports of the Commissioner of Indian Affairs—Continued.			
Agency for vicinity of Green Bay—Continued—			
Report of Frederick Haas, farmer to the Menomonees	1	1	265
Report of Samuel T. Litch, miller to the Menomonees	1	1	265
Report of Harvey Field, blacksmith to the Menomonees	1	1	266
Northern superintendency—			
Report of W. J. Cullen, superintendent	1	1	266
Report of J. W. Lynde, agent for the Chippewas of the Mississippi	1	1	272
Report of John D. Wren, physician to the Chippewas of the Mississippi	1	1	274
Report of C. K. Drew, agent for the Chippewas of Lake Superior	1	1	275
Report of Joseph R. Brown, agent for the Sioux of the Mississippi	1	1	278
Report of S. Brown, superintendent of schools for the Upper and Lower Sioux	1	1	287
Report of Jane S. Williamson, teacher to the Sioux	1	1	290
Report of T. W. Cullen, superintendent of farms to the Lower Sioux	1	1	291
Report of J. Nairn, carpenter for Upper and Lower Sioux	1	1	294
Report of Michael Iton, blacksmith to the Lower Sioux	1	1	295
Report of William Allen, blacksmith to the Upper Sioux	1	1	296
Report of Charles H. Mix, agent for the Winnebagoes	1	1	297
Report of A. Coleman, physician to the Winnebagoes	1	1	300
Report of W. E. Cullen, superintendent of the Winnebago manual labor school	1	1	301
Central superintendency—			
Report of A. M. Robinson, superintendent	1	1	304
Report of A. J. Vaughan, agent for the Blackfeet	1	1	306
Report of Daniel F. Paris, farmer to the Blackfeet	1	1	309
Report of A. H. Redfield, agent for the Yancton Sioux	1	1	310
Report of G. B. Graff, agent for the Omahas	1	1	315
Report of J. L. Gillis, agent for the Pawnees	1	1	316
Report of R. B. Gillis, farmer to the Pawnees	1	1	319
Report of W. W. Dennison, agent for the Ottoes and Missourias	1	1	320
Report of Daniel Vanderslice, agent for the Iowas and the Sacs and Foxes of the Missouri	1	1	323
Report of W. P. Badger, agent for the Kickapoos	1	1	324
Report of Thomas B. Sykes, agent for the Delawares	1	1	326
Report of John G. Pratt, superintendent of Delaware Baptist Mission School	1	1	329
Report of B. J. Newsom, agent for the Shawnees and Wyandottes	1	1	330
Report of William E. Murphy, agent for the Pottawatomies	1	1	332
Report of Perry Fuller, agent for the Sacs and Foxes of the Mississippi and the Ottowas and Chippewas	1	1	333
Report of M. C. Dickey, agent for the "Kaws," or Kansas Indians	1	1	336
Report of Seth Clover, agent for the Weas and Piankeshaws, Kaskaskias and Peorias, and Miamies	1	1	338
Southern Superintendency—			
Report of Elias Rector, superintendent	1	1	339
Report of Andrew J. Dorn, agent for the Osages, Quapaws, Senecas, and Shawnees and Senecas	1	1	344
Report of John C. Shoenmakers, superintendent of the Osage Manual Labor School	1	1	345
Report of James J. Killebrew, farmer to the Quapaws	1	1	347
Report of W. H. Garrett, agent for the Creeks	1	1	347
Report of R. M. Loughridge, missionary to the Creeks, and superintendent of the Tallahassee Manual Labor School	1	1	349
Report of Samuel M. Rutherford, agent for the Seminoles	1	1	350
Report of Douglas H. Cooper, agent for the Choctaws and Chickasaws	1	1	352

Subject.	Vol.	No.	Page.
Reports of the Commissioner of Indian Affairs—Continued.			
Southern Superintendency—Continued—			
Report of Rev. O. P. Stark, missionary to the Choctaws	1	1	354
Report of Rev. C. C. Copeland, missionary to the Choctaws.	1	1	355
Report of Rev. Wm. Cass, Simon Hancock, and Lewis Cass, native Choctaw missionaries	1	1	356
Report of Rev. Allen Wright, missionary to the Choctaws	1	1	357
Report of Rev. Cyrus Byington, missionary to the Choctaws.	1	1	358
Report of C. Kingsbury, superintendent of the Chuala Boarding School	1	1	359
Report of George Ainslie, superintendent of Koonsha Seminary	1	1	361
Report of John Edwards of Wheelock, superintendent Female Seminary	1	1	362
Report of John Edwards of Wheelock, superintendent Female Seminary	1	1	363
Report of W. R. Baker, superintendent of Armstrong Academy	1	1	364
Report of F. M. Paine, superintendent of Fort Coffee and New Hope Academies	1	1	365
Report of F. M. Paine, superintendent of Fort Coffee and New Hope Academies	1	1	368
Report of Alexander Reid, superintendent of Spencer Academy	1	1	369
Report of Joseph Dukes, school trustee	1	1	370
Report of H. Balentine, superintendent of Wapanucka Institute	1	1	372
Report of J. C. Robinson, superintendent of Chickasaw Manual Labor School	1	1	375
Report of J. C. Robinson, superintendent of Chickasaw Manual Labor School	1	1	376
Report of J. H. Carr, superintendent of Bloomfield Academy.	1	1	377
Report of M. Leeper, agent for the Wichita and neighboring tribes	1	1	378
New Mexico Superintendency—			
Report of J. L. Collins, superintendent	1	1	381
Report of C. Carson, agent for the Indians within the Taos agency	1	1	387
Report of Silas F. Kendrick, agent for the Pueblos	1	1	389
Report of John Walker, agent for the Indians within the Tuscon agency	1	1	391
Utah Superintendency—			
Report of A. Humphreys, agent for the Indians within the "Utah" agency	1	1	393
Oregon and Washington Superintendency—			
Report of E. R. Geary, superintendent	1	1	395
Report of M. T. Simmons, agent for the Indians of Puget Sound district	1	1	410
Report of W. B. Gosnell, agent for the Squaksin, Nisqually, and Puyallup Indians	1	1	422
Report of W. B. Kimball, physician to Squaksin reserve	1	1	425
Report of C. C. Pagett, teacher upon Squaksin reserve	1	1	427
Report of D. M. Mounts, Nisqually farmer	1	1	428
Report of John L. Perkins, carpenter upon Puyallup reserve.	1	1	428
Report of R. H. Lansdale, agent for the Klickitat, Wisham, Columbia river, Yakima, and Winatcha Indians	1	1	429
Report of A. J. Cain, agent for the Cayuse, Walla-Walla, Palouse, Nez Percé, and Spokane Indians	1	1	432
Report of Daniel Newcomb, agent for the Indians within the "Siletz" agency	1	1	435
Report of E. B. Ball, teacher at Siletz	1	1	438
Report of J. B. Sykes, sub-agent at Yaquina bay	1	1	438
Report of John F. Miller, agent at Grand Ronde	1	1	440
Report of G. H. Abbott, sub-agent for the Indians of the eastern district of Oregon	1	1	441

Subject.	Vol.	No.	Page.
Report of the Commissioner of Indian Affairs—Continued.			
Miscellaneous—			
Office letter to Agent Butler, of November 29, 1859, relative to the intruders upon the Cherokee neutral land	1	1	444
Office letter to Charles W. Blair, Esq., of March 13, 1860, relative to said intruders	1	1	444
Office letter to Superintendent Rector, of April 21, 1860, relative to said intruders	1	1	446
Office letter, of June 4, 1860, to Secretary of Interior relative to said intruders	1	1	447
Office letter, of same date, to Elias Rector, relative to said intruders	1	1	447
Letter of Agent Cowart, of November 5, 1860, in regard to his proceedings against said intruders	1	1	448
Letter of ditto, of November 9, 1860	1	1	449
Office circular to agents, requiring prompt rendition of their accounts	1	1	451
Special report of Commissioner Greenwood relative to his visit to the Cheyennes and Arrapahoes	1	1	452
Official instructions to the newly appointed supervising agents of California	1	1	454
Office letter appointing John A. Dreibelbes one of said supervising agents	1	1	456
Office letter appointing J. Y. McDuffie the other supervising agent	1	1	457
Statement showing action of office relative to applications of Indians for bounty land	1	1	458
Report of G. Bailey, disbursing clerk, upon the Indian trust fund	1	1	459
Report of the Commissioner of Pensions, viz:			
On the operations of the Pension Office during the year ending June 30, 1860	1	1	467
Reports of the Commissioner of Patents, viz:			
In relation to arts and manufactures for the year 1860, (Part I)	5	7	1
In relation to arts and manufactures for the year 1860, (Part II, plates).	6	7	1
Report of the Commissioner of Public Buildings, viz:			
On the operations of his office during the year ending June 30, 1860, with a compendium of the same	1	1	483
Report of the United States Architect, viz:			
In relation to the cost and plan of a new jail in the District of Columbia	1	1	499
Report of the Superintendent of the Census, viz:			
In relation to the taking of the eighth census	1	1	501
Report of the Warden of the Penitentiary of the District of Columbia, viz:			
On the operations of his office during the year ending June 30, 1860, with reports of the clerk, physician, matron, and chaplain of the Penitentiary	1	1	505
Report of the Superintendent of the Government Hospital for the Insane in the District of Columbia, viz:			
On the operations of his office during the year ending June 30, 1860, with a compendium of the same	1	1	530

Subject.	Vol.	No.	Page.
Report of the President of the Board of Directors of the Institution for the Deaf and Dumb and the Blind in the District of Columbia, viz:			
On the condition and operations of the Institution during the year 1859–60	1	1	552
Report of the Engineer of the Potomac water-works, viz:			
On the condition and operations upon the works of the Potomac water-works in 1859–60	1	1	564

36TH CONGRESS, 2d Session. | SENATE. | Ex. Doc. No. 7.

REPORT

OF THE

COMMISSIONER OF PATENTS

FOR THE YEAR 1860.

ARTS AND MANUFACTURES.

VOLUME II.

WASHINGTON:
GEORGE W. BOWMAN, PRINTER.
1861

IN THE SENATE OF THE UNITED STATES,

February 5, 1861.

Resolved, That fifteen thousand additional copies of the Annual Report of the Commissioner of Patents on arts and manufactures for the year 1860, be printed for the use of the Senate, and ten thousand copies for the Interior Department for purposes of official distribution: *Provided*, That the tabular statements and indices be printed with nonpareil type and the description of patents with brevier type, so as to complete the entire report in two octavo volumes.

ASBURY DICKINS, *Secretary*.

ILLUSTRATIONS.

26642

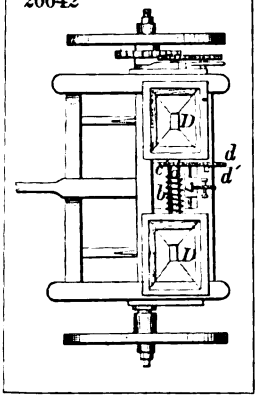

26643

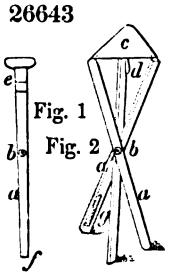

26644

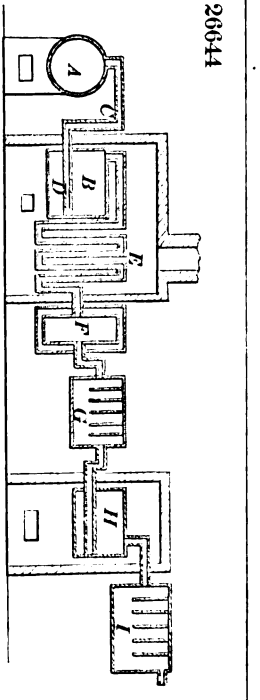

26645

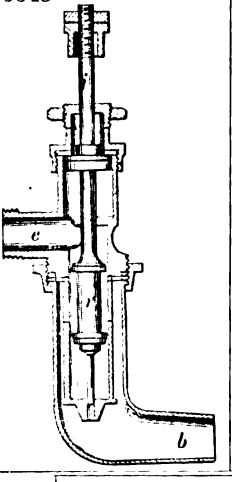

26646

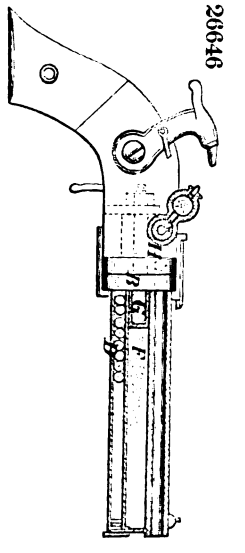

26647

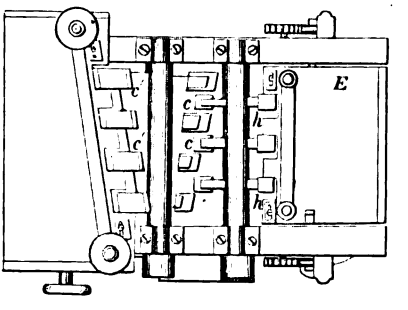

26649

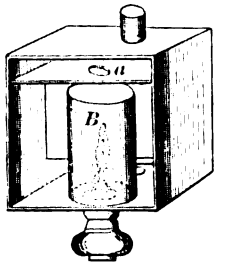

26648

Fig. 1 Fig. 2

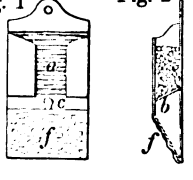

26650

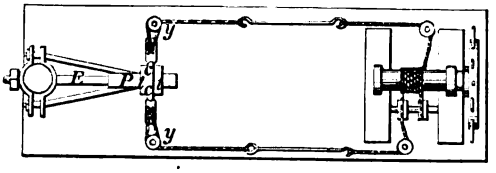

26651

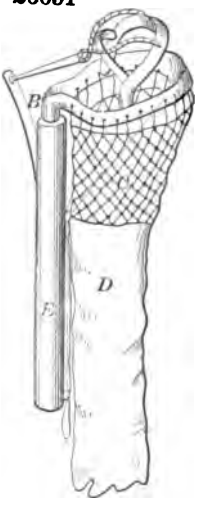

26652

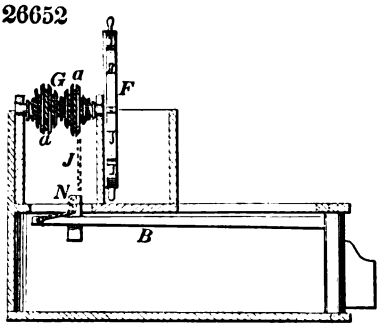

26653

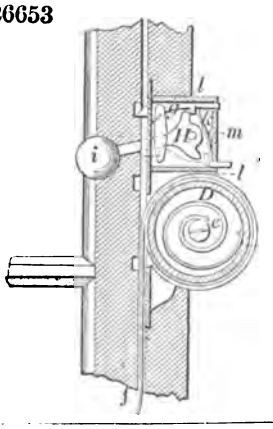

26654

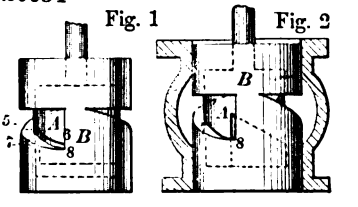

26655

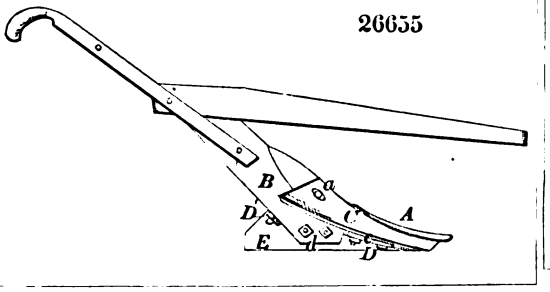

26656

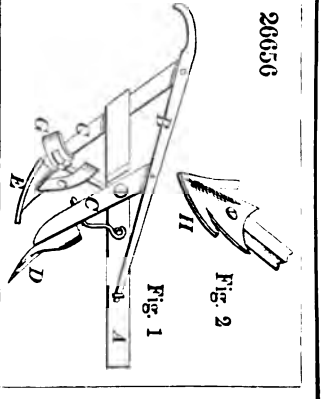

26657

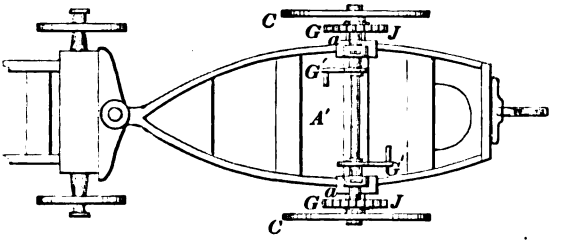

26660

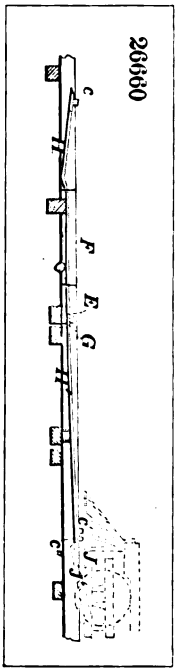

26659

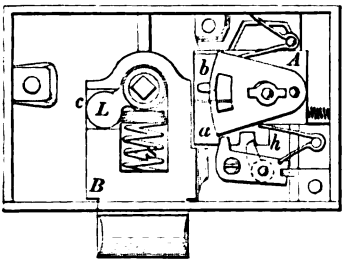

26661

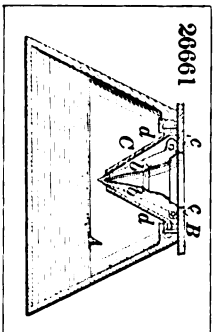

26663

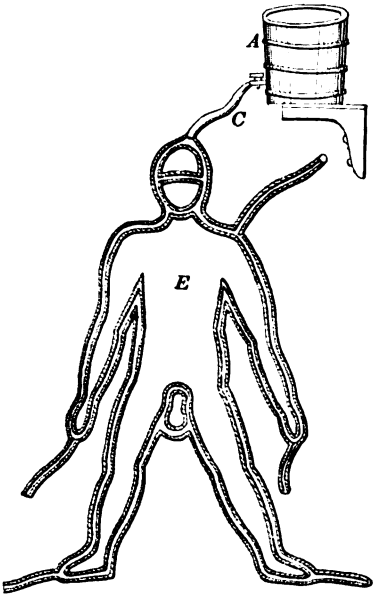

26662

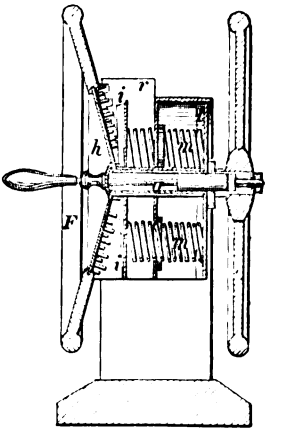

26664

Fig. 1

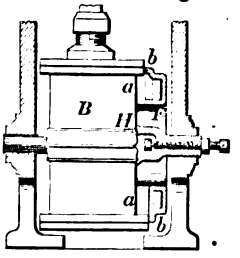

Fig. 2

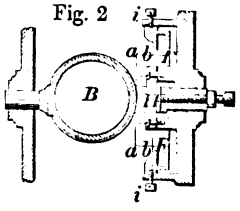

26665

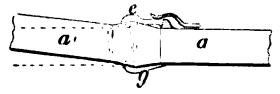

26666

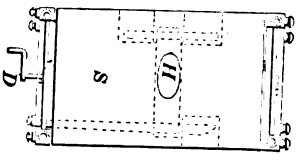

26667

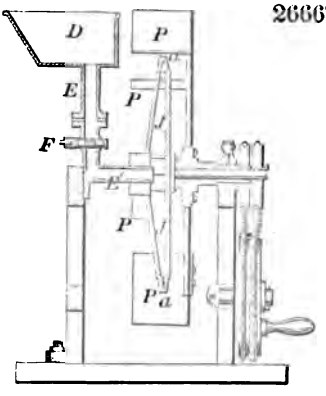

26668

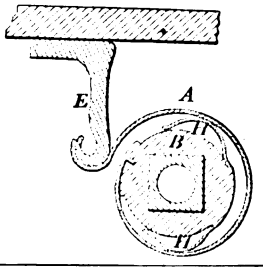

26671

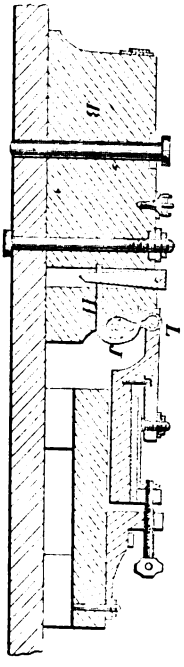

26670

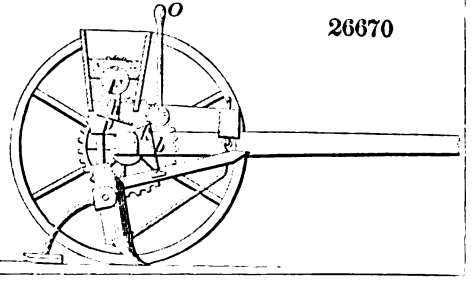

26672

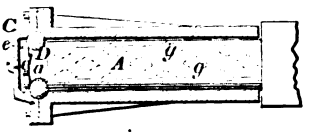

26673

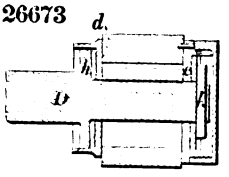

26674

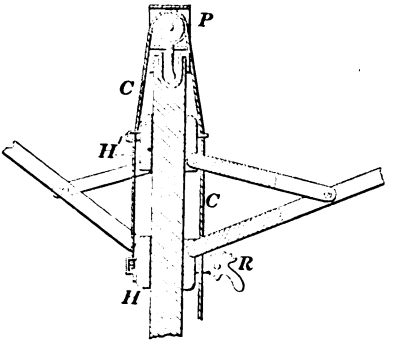

26675

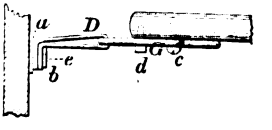

26676

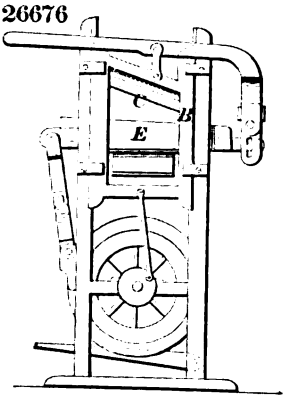

26677

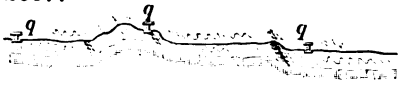

26679

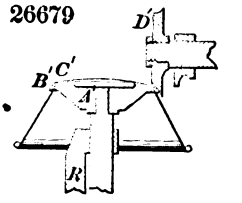

26678

26680

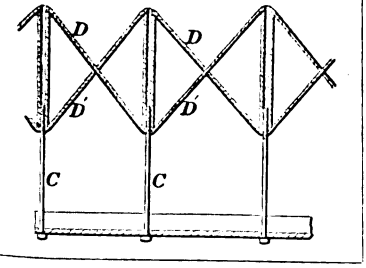

26681

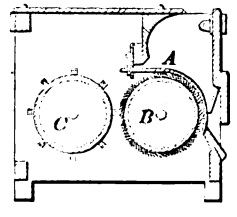

26682

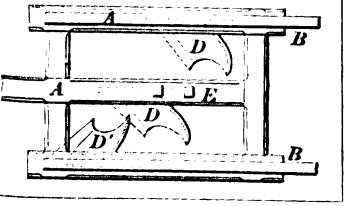

26684

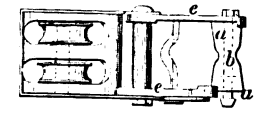

26686

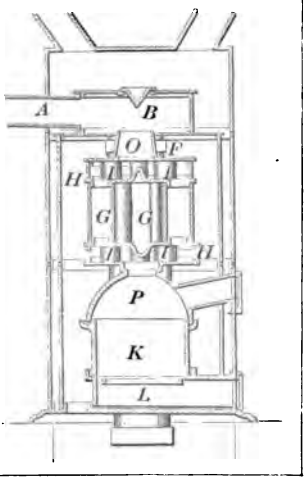

26687

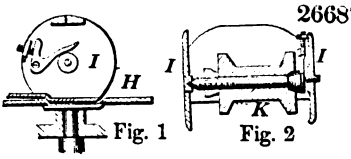

Fig. 1 Fig. 2

26688

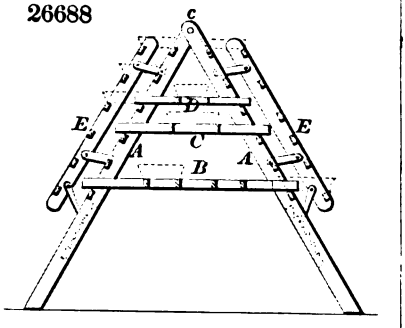

26689

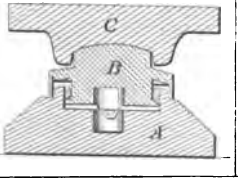

26690

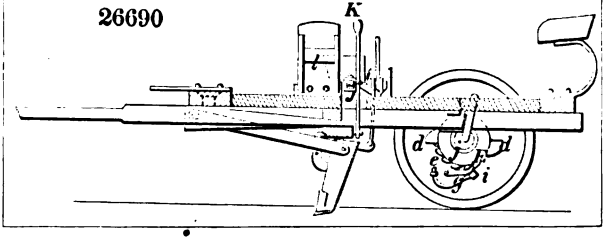

26691

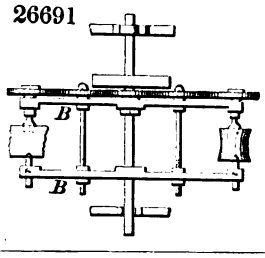

26692

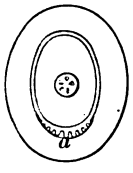

26695

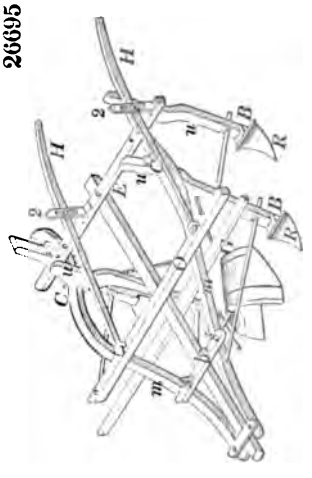

26696

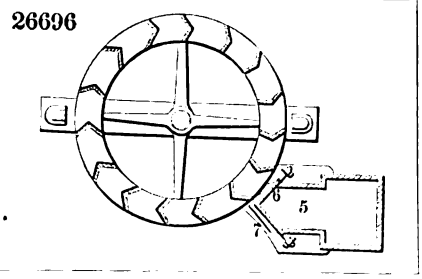

26699

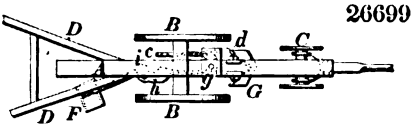

26701

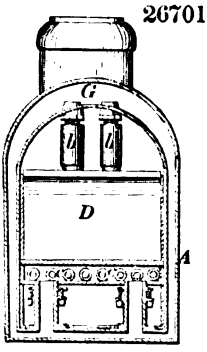

26700

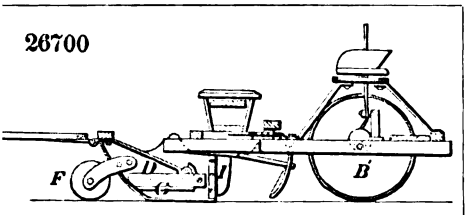

26705

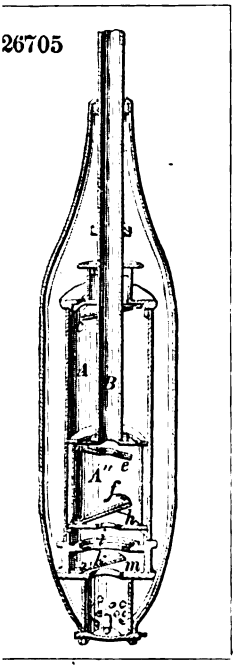

26702

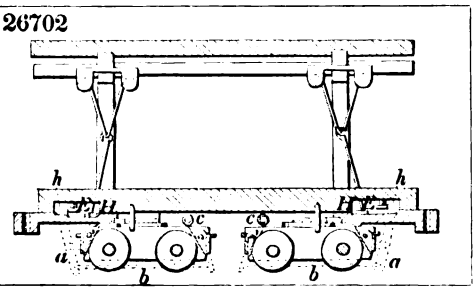

26704

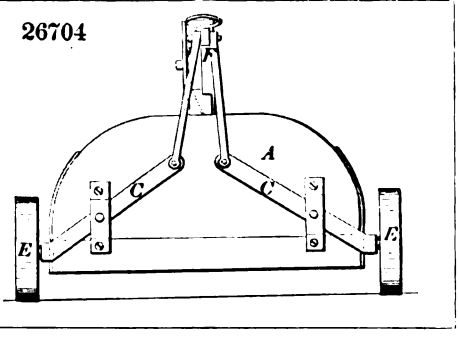

26706

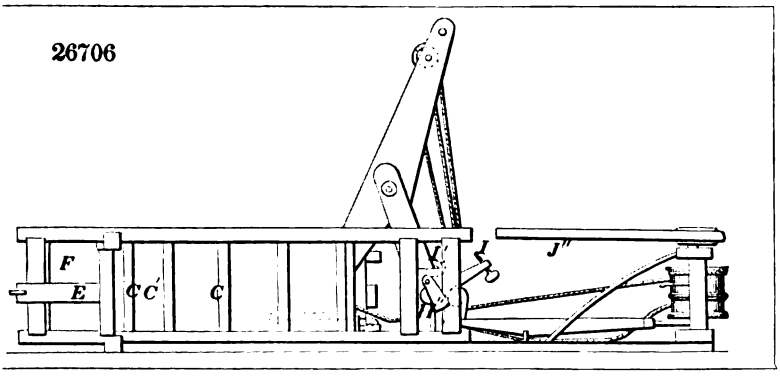

26707

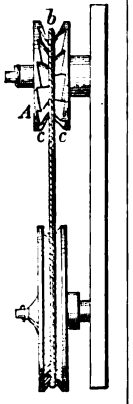

26708

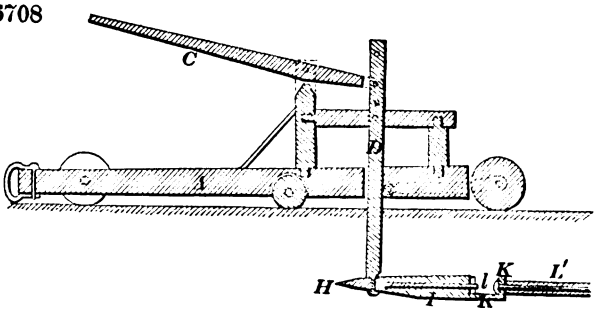

26709

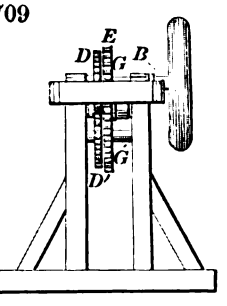

26710

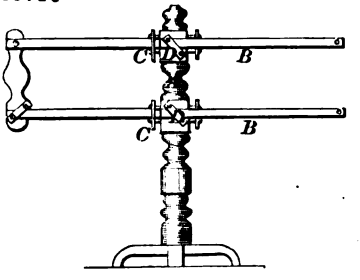

26711

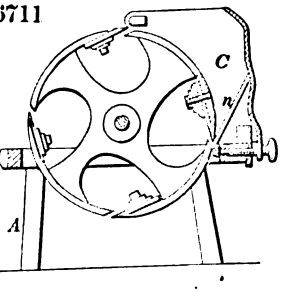

26712

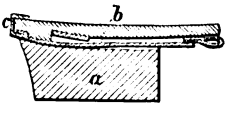

26713

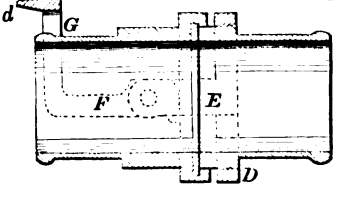

26714

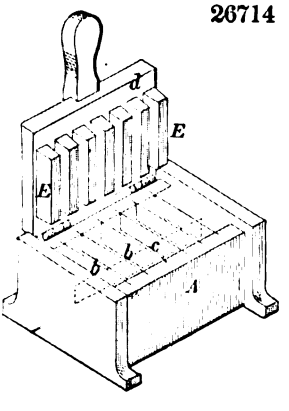

26715

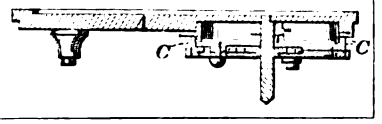

26716

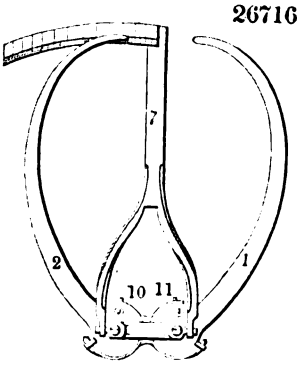

26717

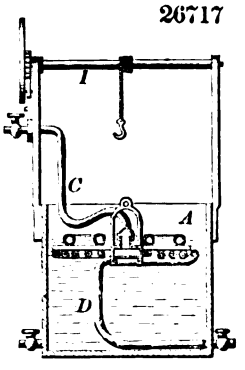

26718

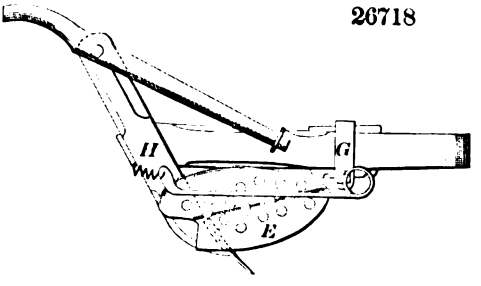

26719

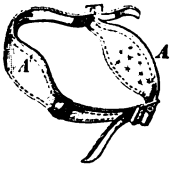

26720

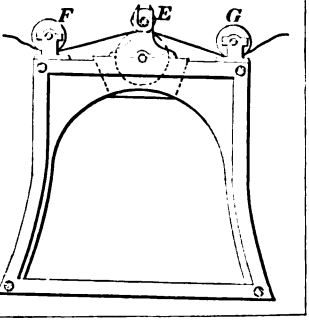

26721

26722

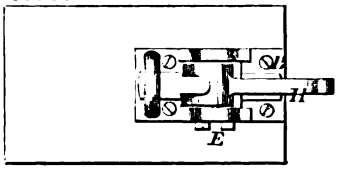

26724

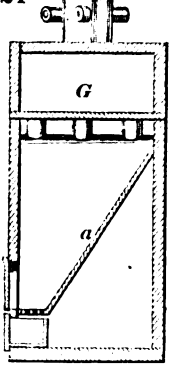

26723

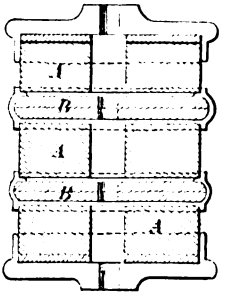

26725

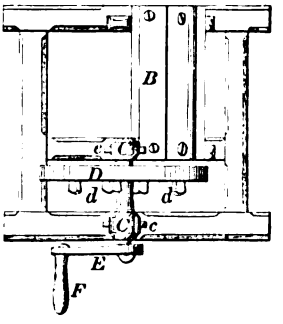

26726

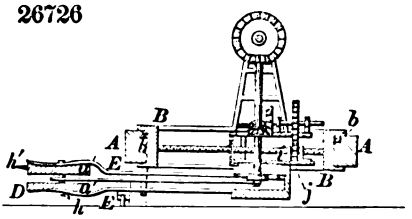

26727

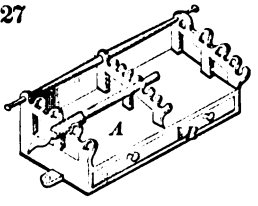

26728

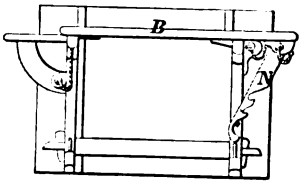

26729

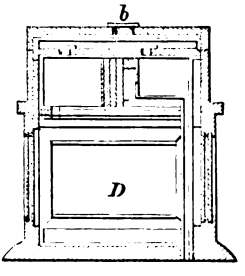

26730

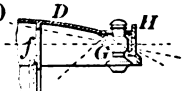

Fig. 1

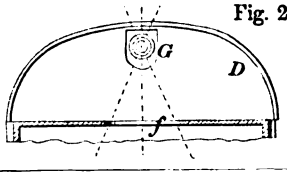

Fig. 2

26731

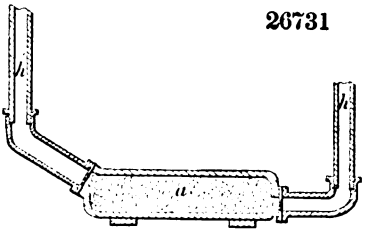

26734

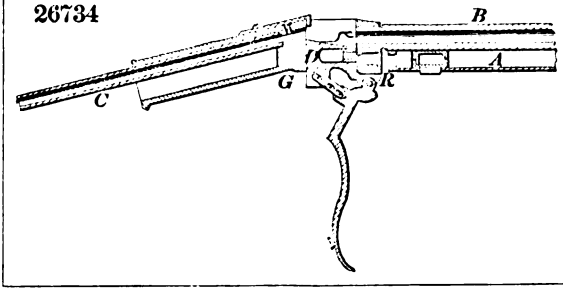

26732

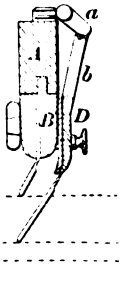

26735

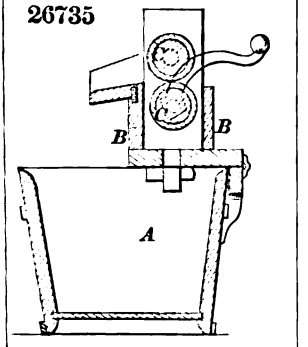

26736

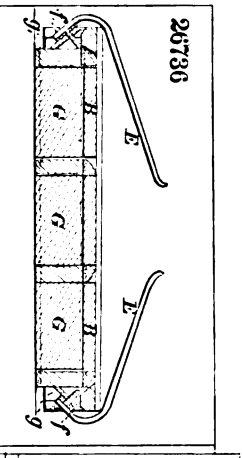

26737

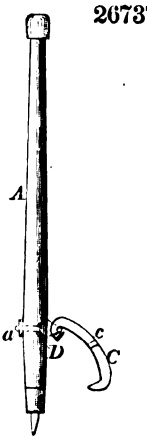

26738

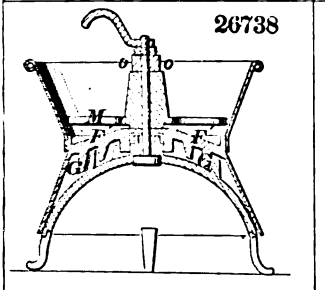

26739

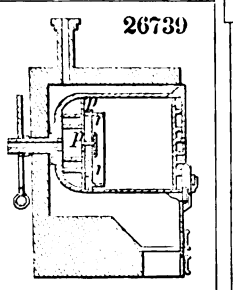

26740

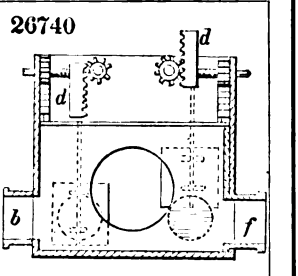

26741

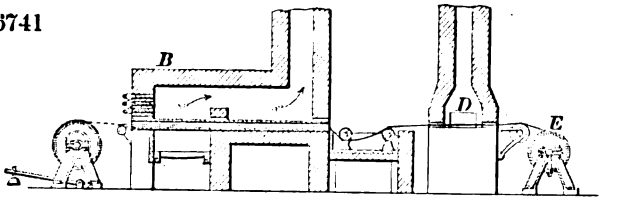

26742

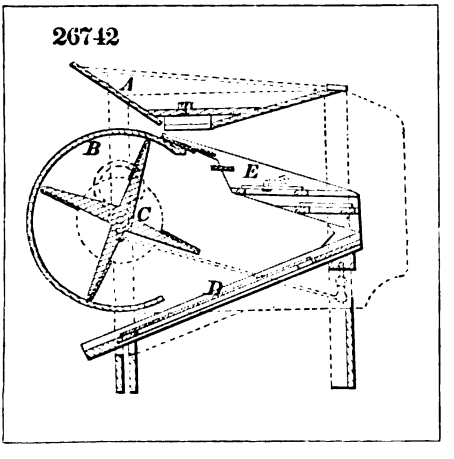

26743

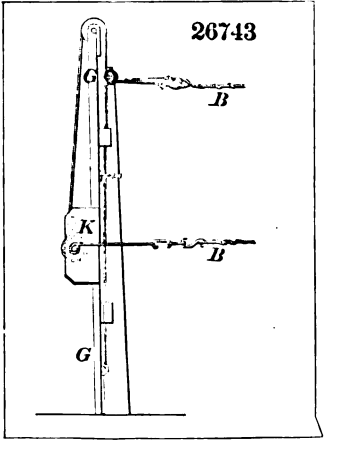

26744

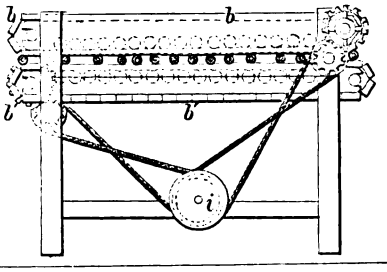

26745

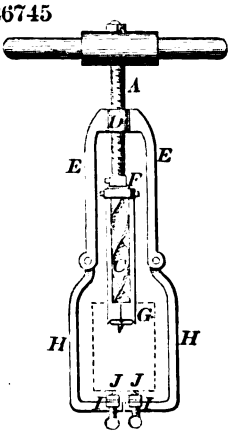

26746

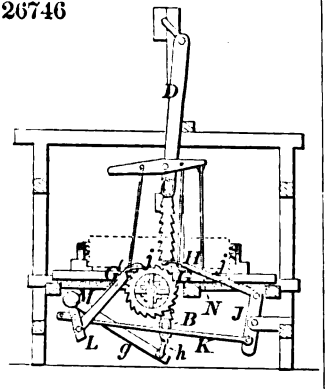

26747

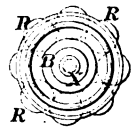

26748

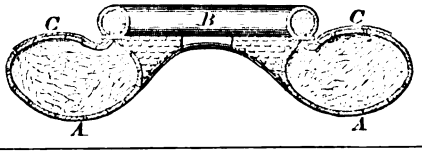

26749

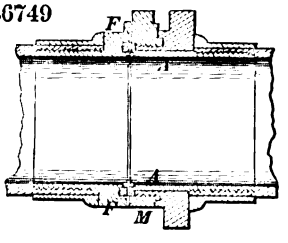

26750

Fig. 1

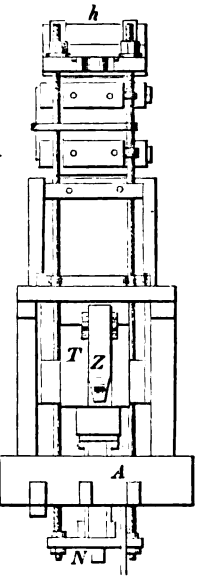

Fig 2

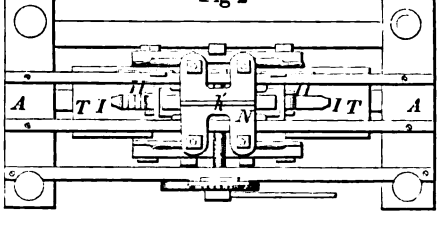

26751

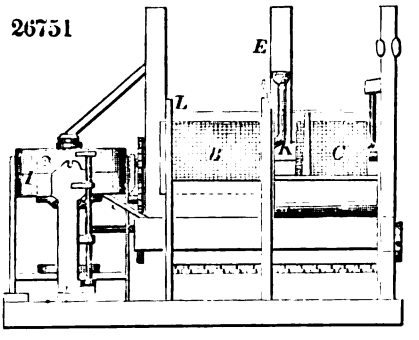

26752

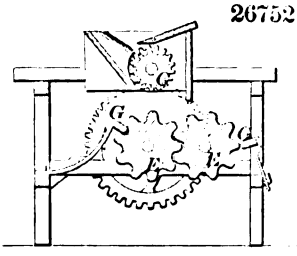

26753

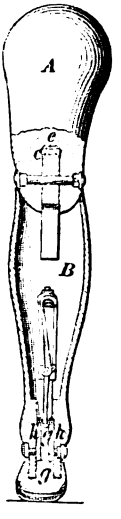

26754

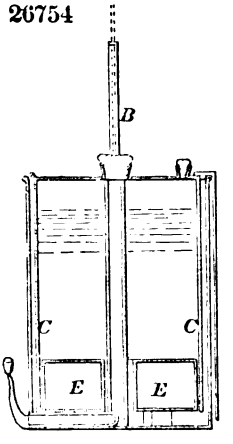

26755

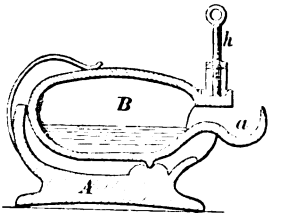

26756

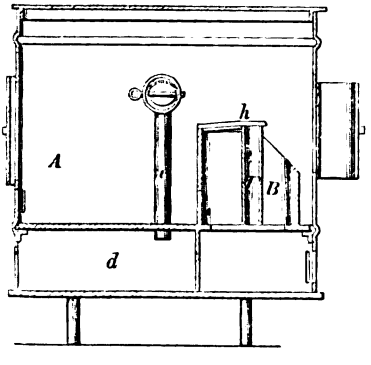

26757

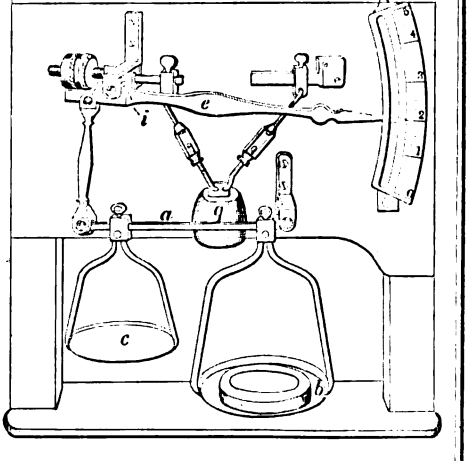

26758

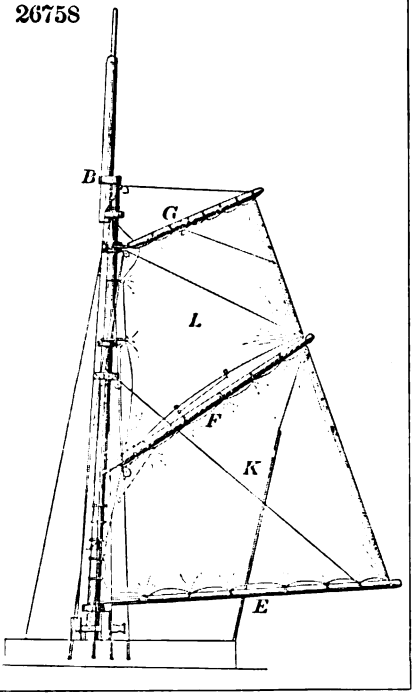

26759

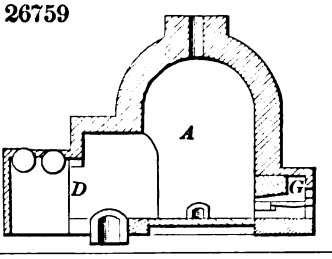

26760

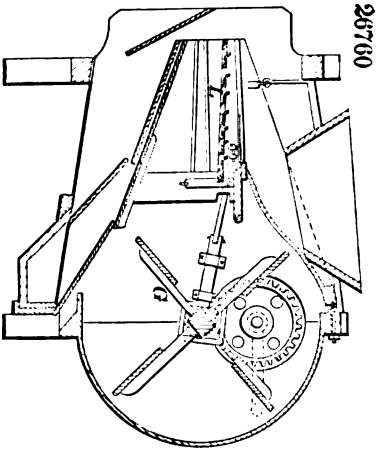

26761

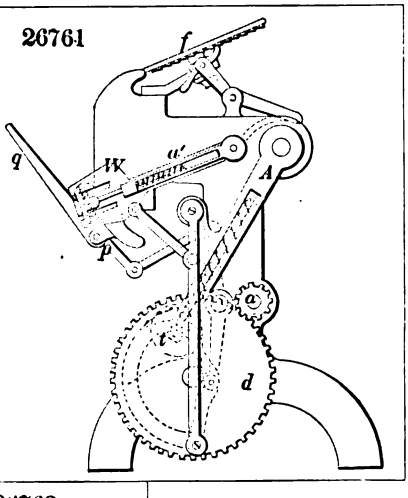

26762

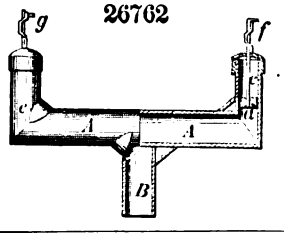

26763

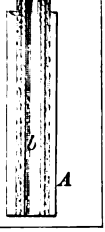

26764

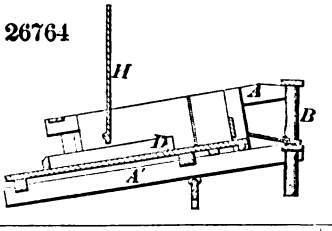

26765

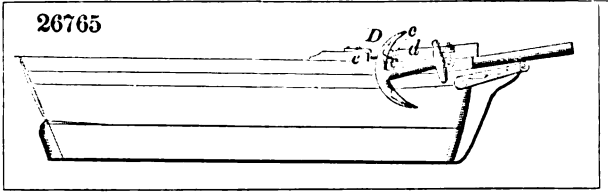

26766

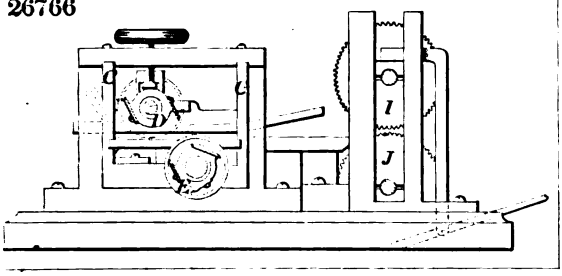

26767

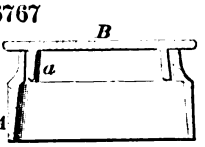

26768

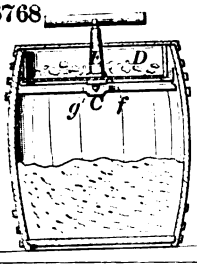

26769

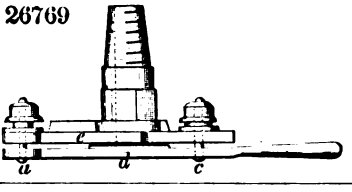

26771

Fig. 1

Fig. 2

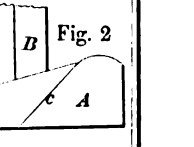

26770

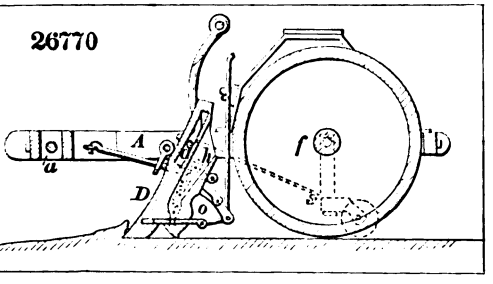

26774

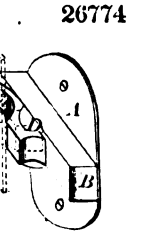

26773

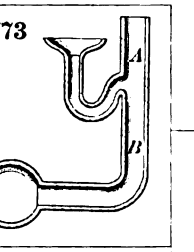

26772

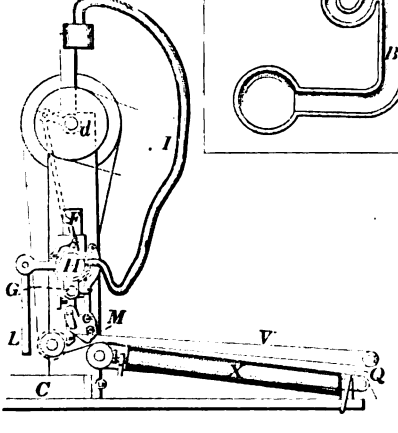

26775

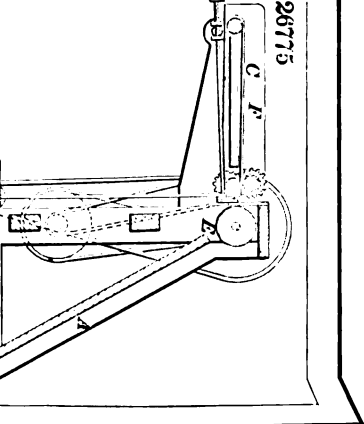

26776

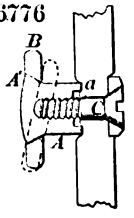

26777

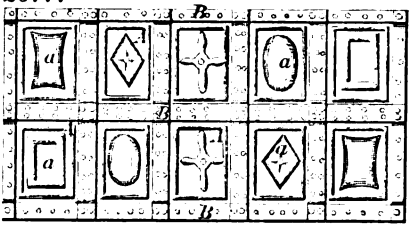

26778

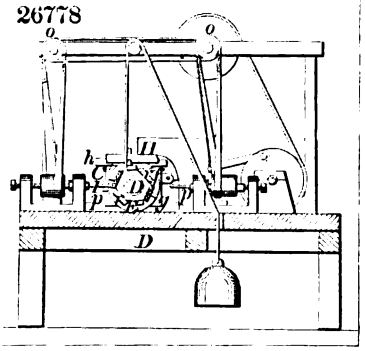

26779

26781

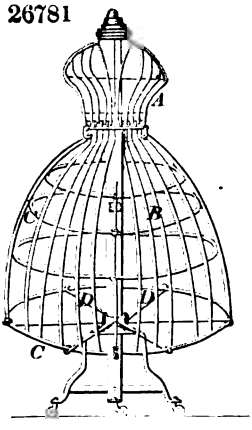

26782

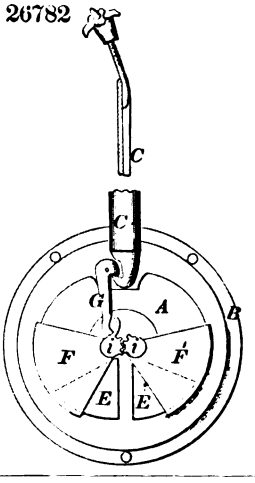

26783

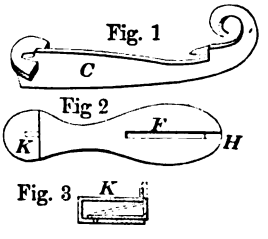

26784

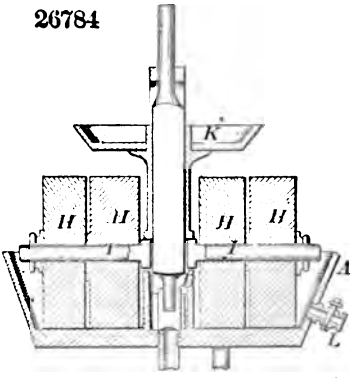

26785

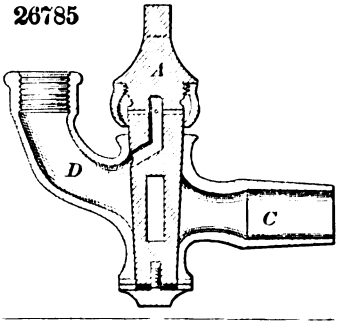

6786

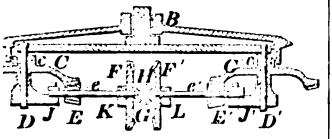

26787

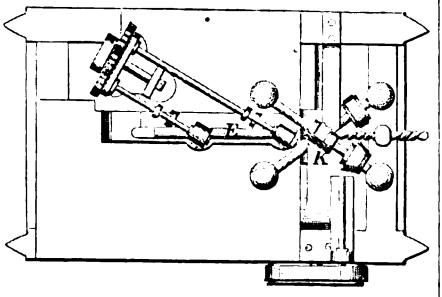

788

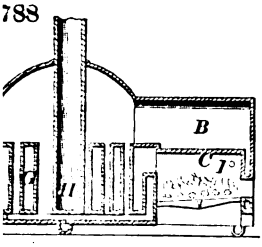

26789 Fig. 1

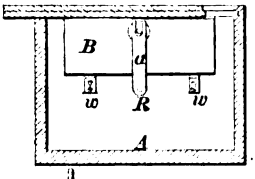

Fig 2

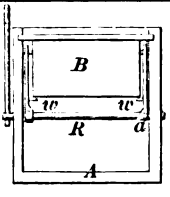

26790

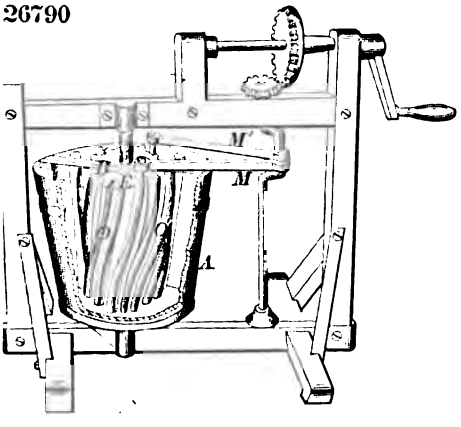

26792

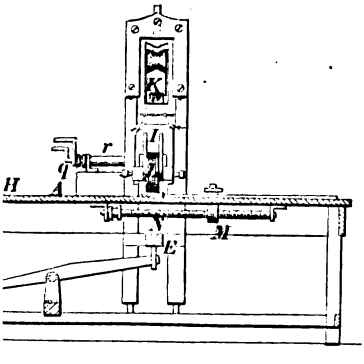

26791

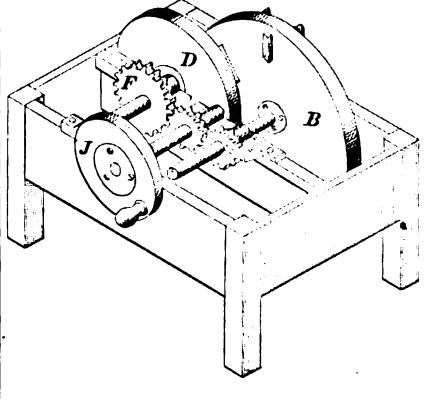

26793

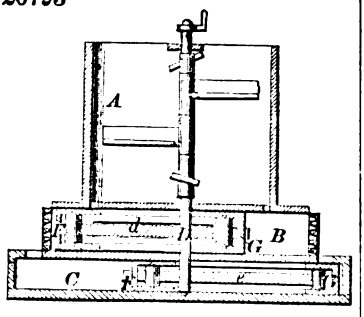

26794

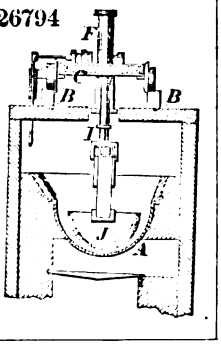

26795

Fig. 1

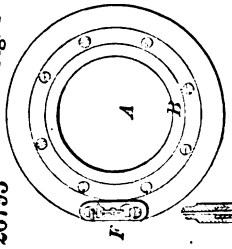

Fig 2

26796

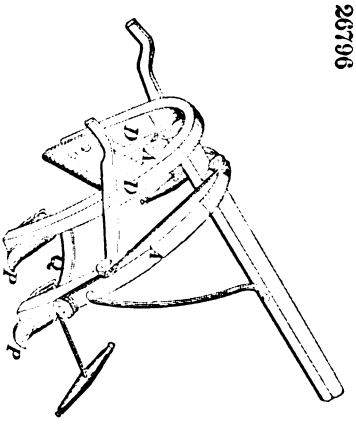

26797

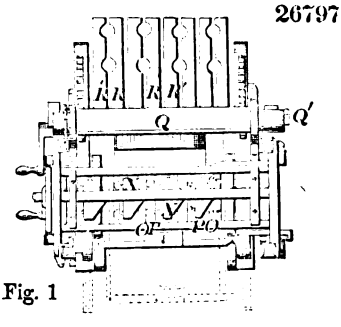

Fig. 1

Fig 2

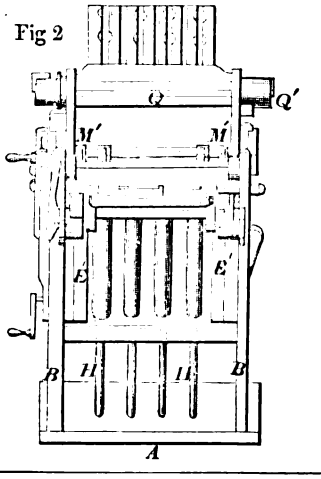

26798

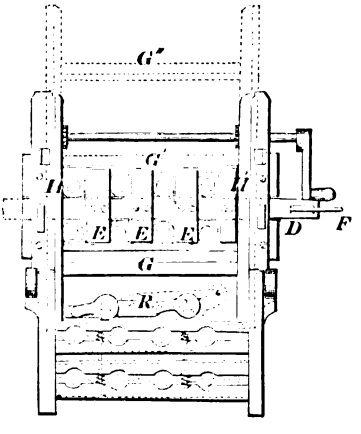

26801

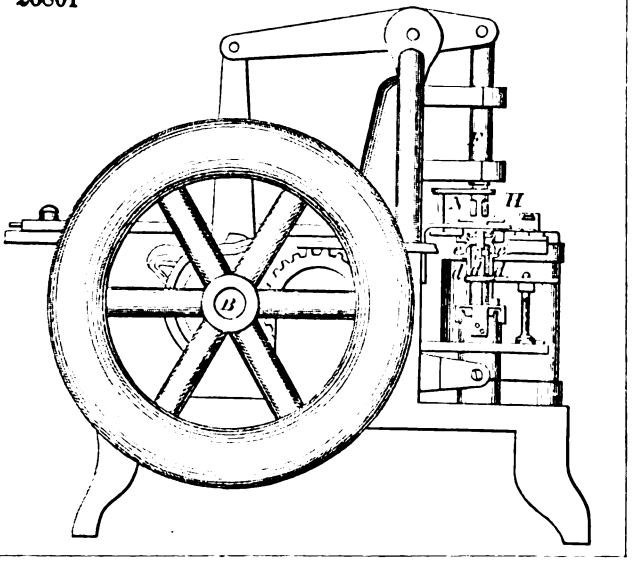

26802

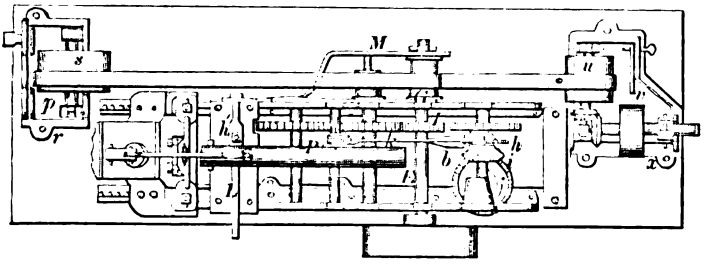

26803

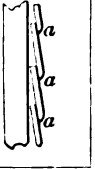

26804

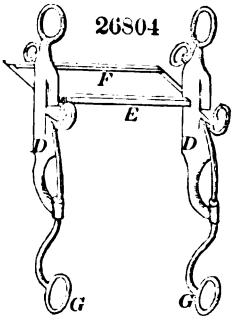

26806

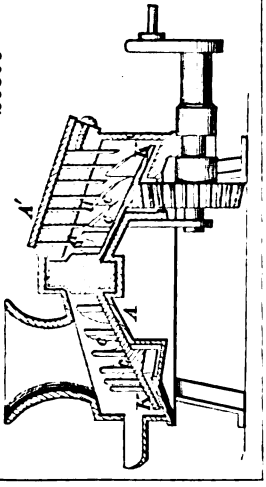

26807

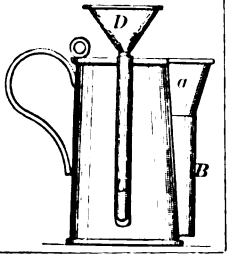

26805

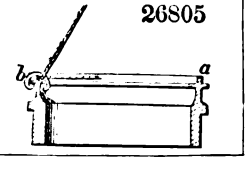

26808

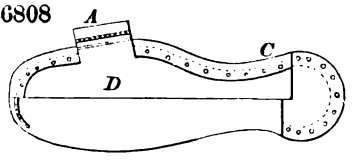

26809

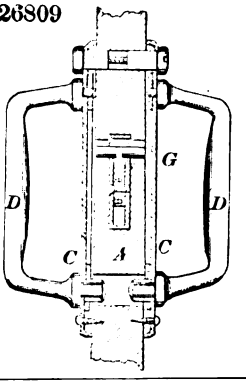

26810

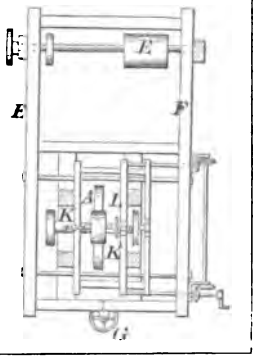

26811

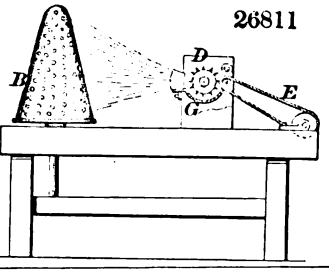

26812

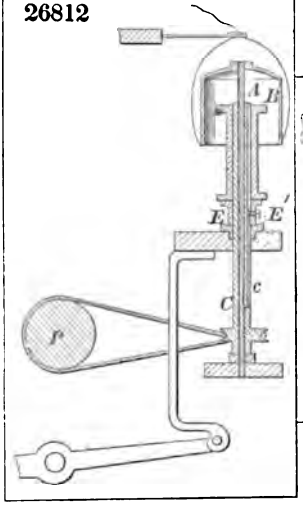

26813

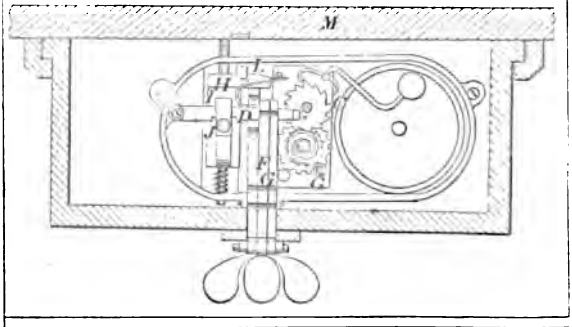

26814

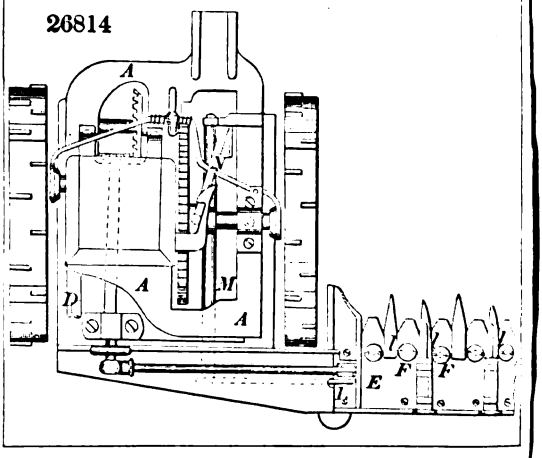

26815

26816

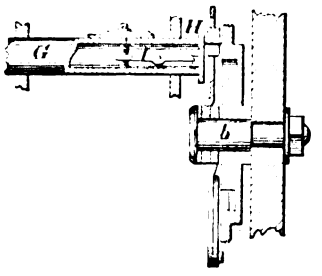

26817

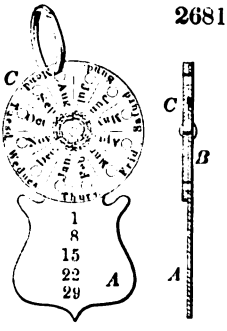

26820

Fig. 1

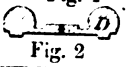

Fig. 2

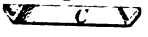

Fig. 3

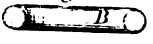

Fig. 4

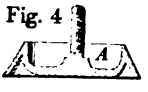

26818

Fig. 1

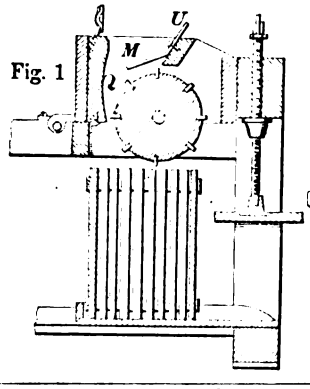

Fig. 2

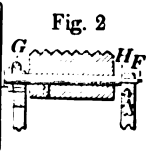

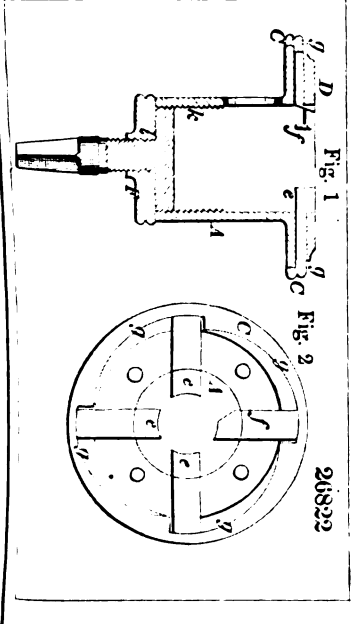

26819

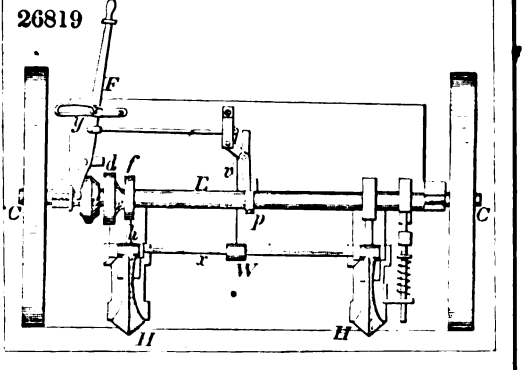

26821

26758

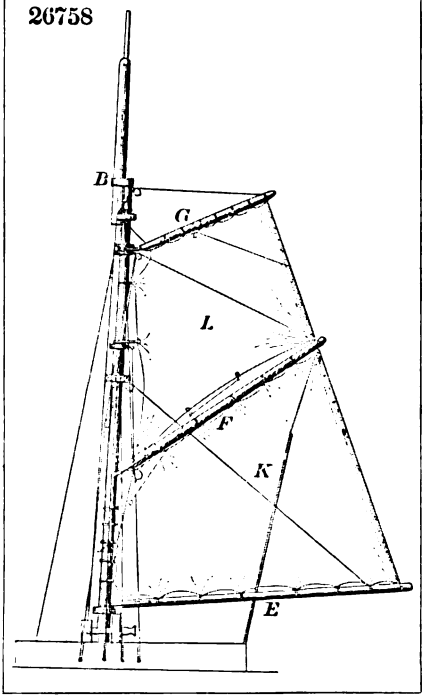

26759

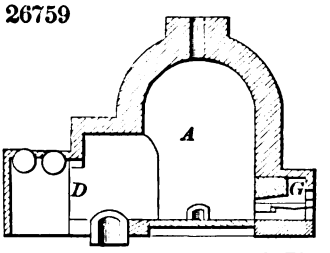

26760

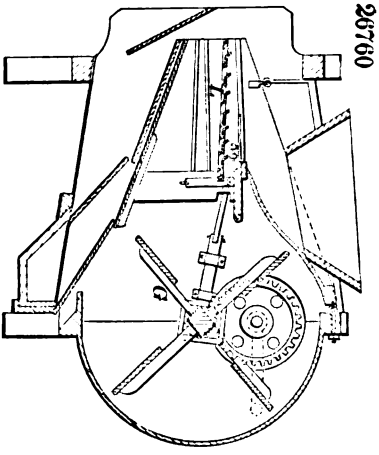

26761

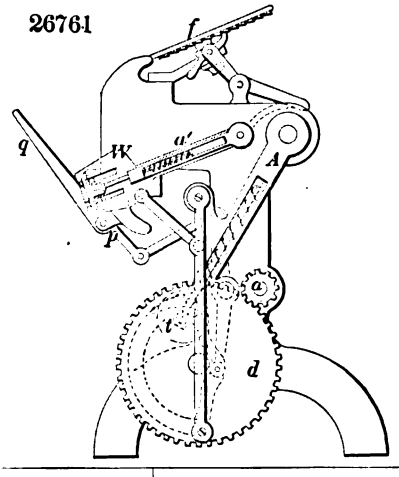

26762

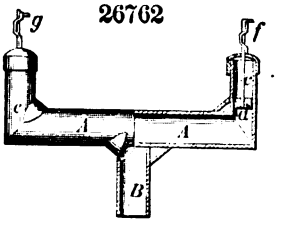

26763

26764

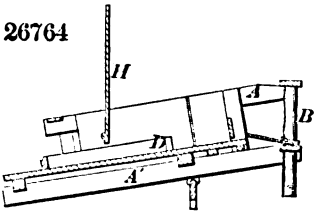

26765

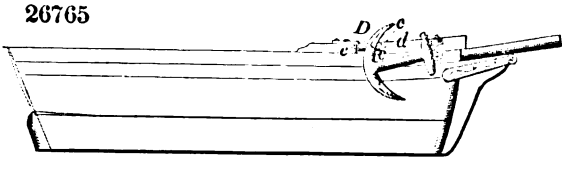

26766

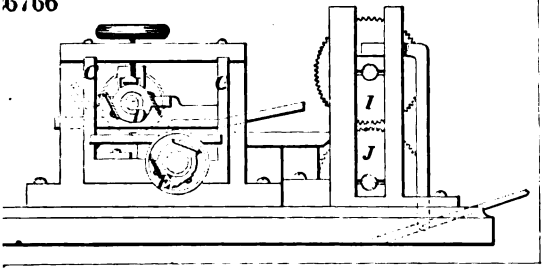

26767

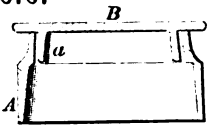

26768

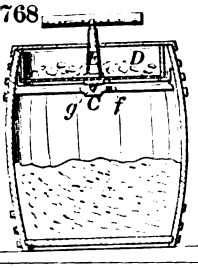

26769

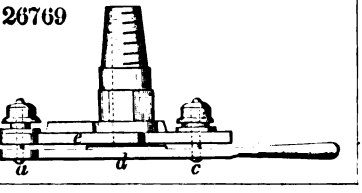

26771 Fig. 1 Fig. 2

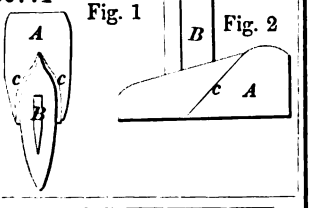

26770

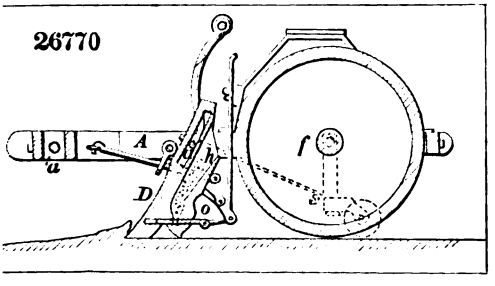

26774

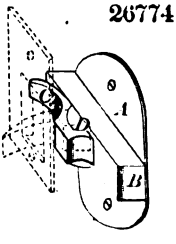

26773

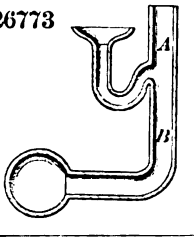

26772

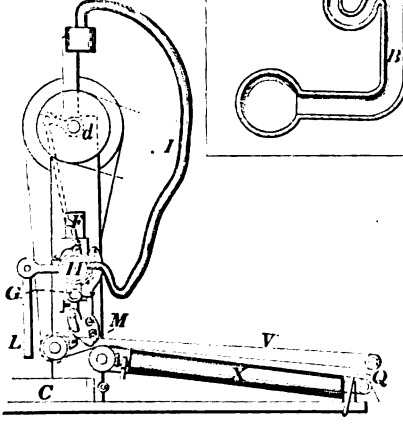

26775

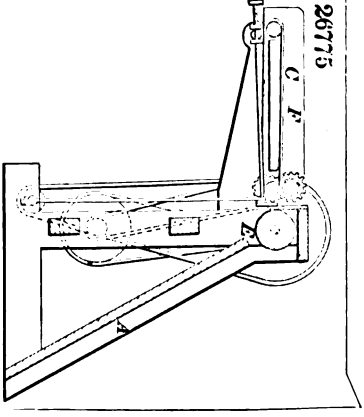

26776

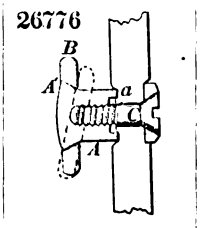

26777

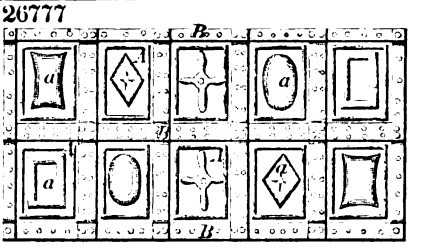

26778

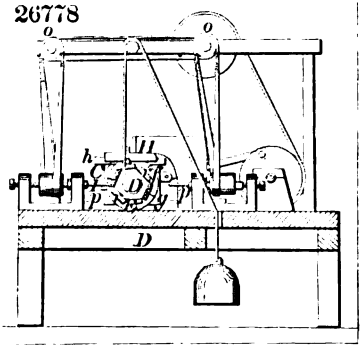

26779

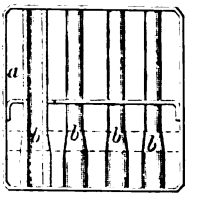

26781

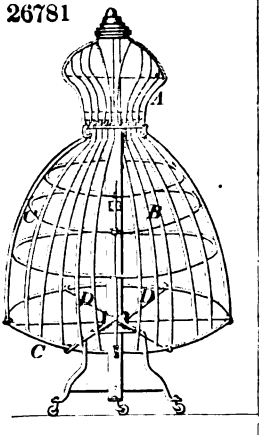

26782

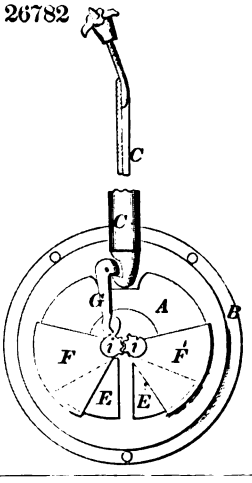

26783

Fig. 1

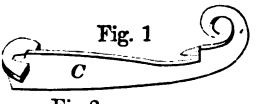

Fig 2

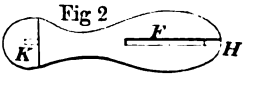

Fig. 3

26784

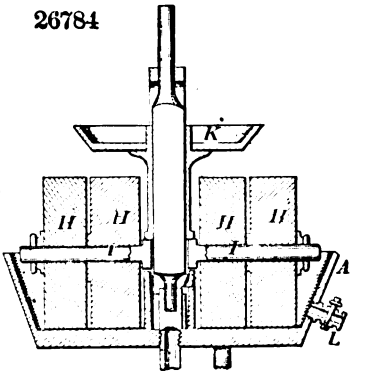

26785

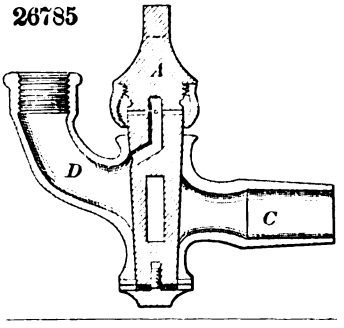

26786

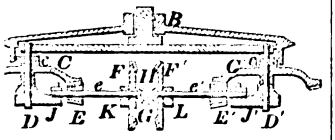

26787

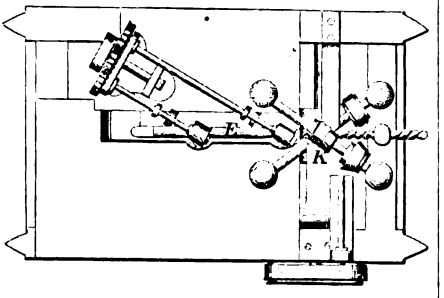

788

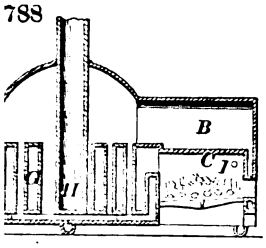

26789 Fig. 1

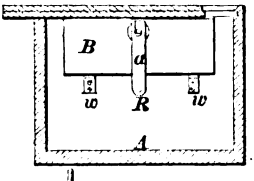

Fig 2

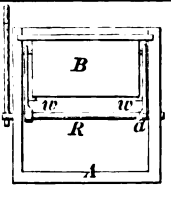

26790

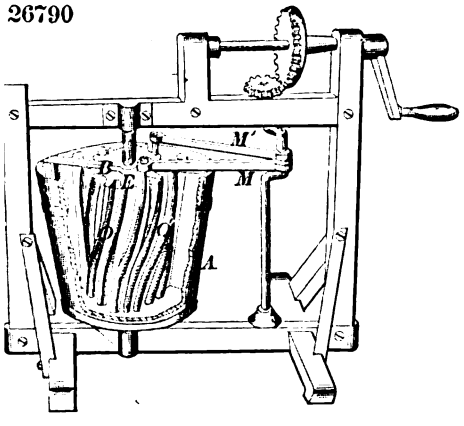

26792

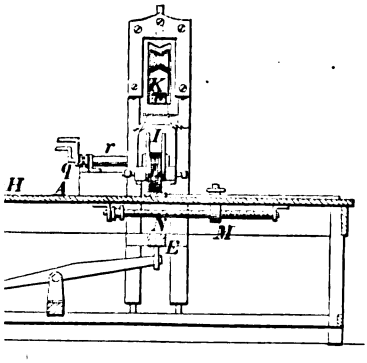

26791

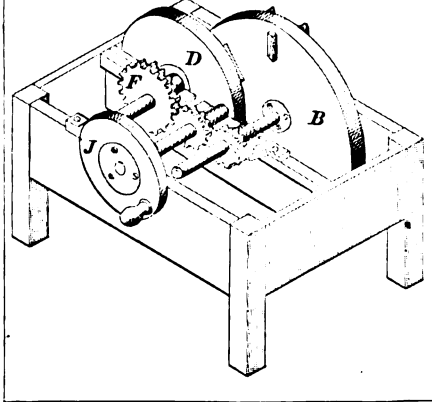

26793

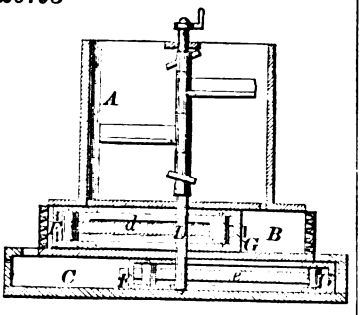

26794

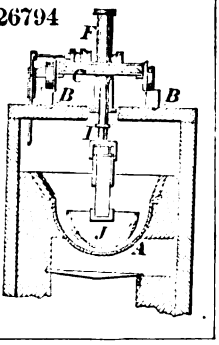

26796

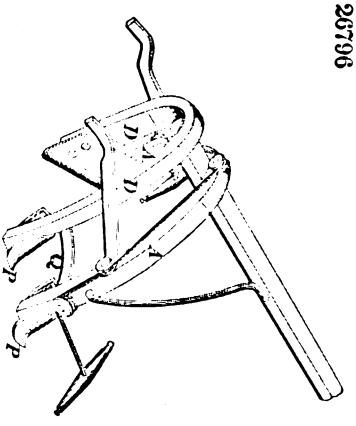

Fig. 1

26795

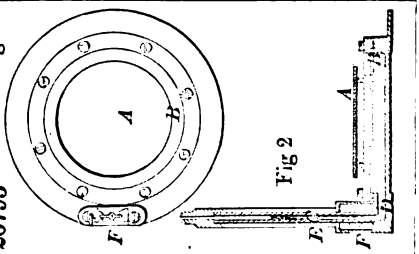

26797

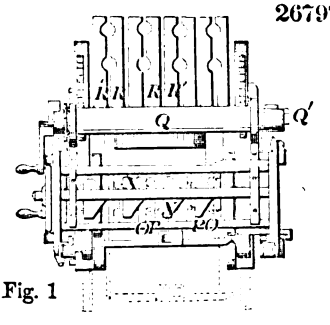

Fig. 1

Fig 2

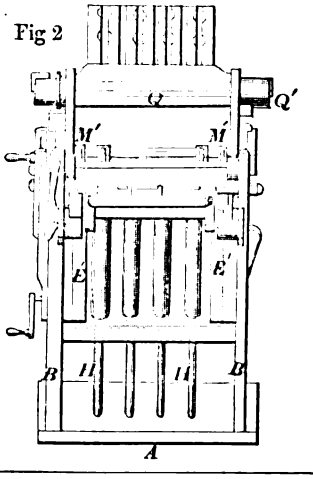

26798

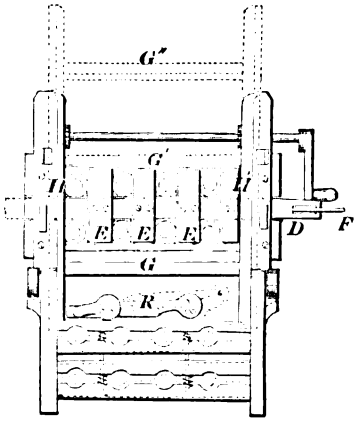

26801

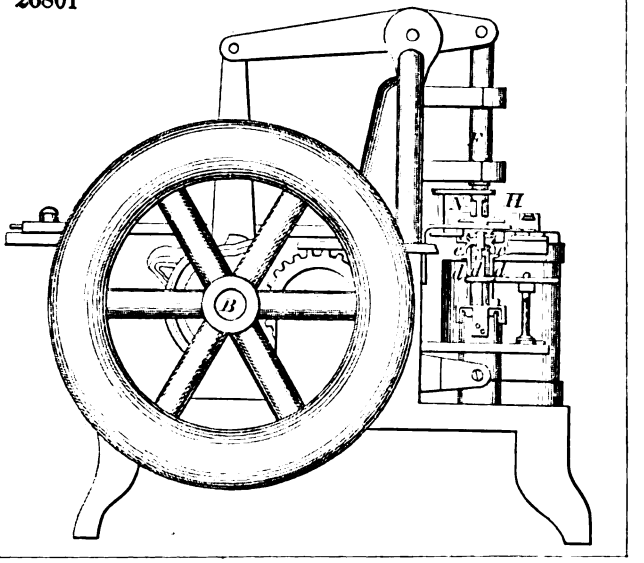

26802

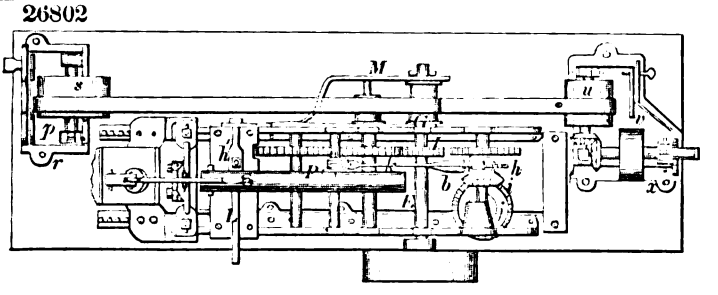

26803

26804

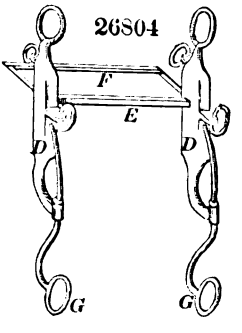

26806

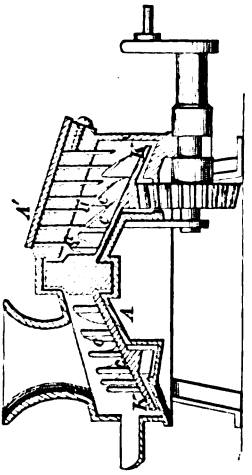

26807

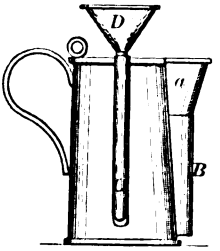

26805

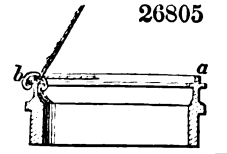

26758

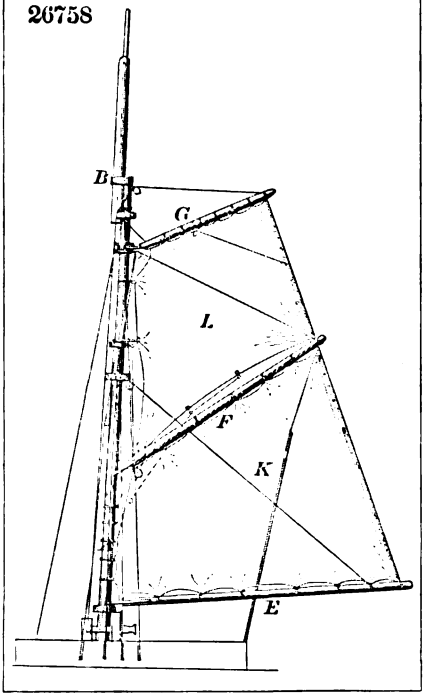

26759

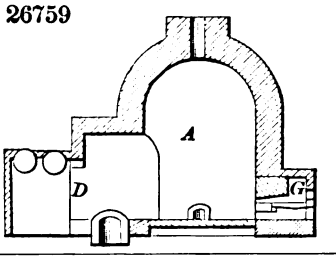

26760

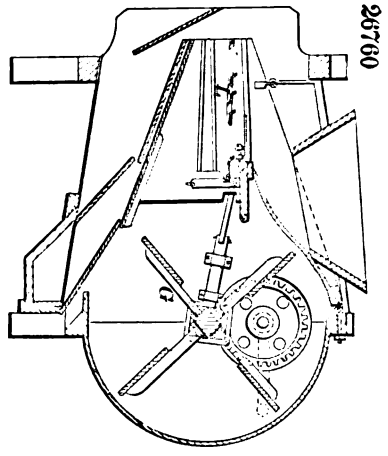

26761

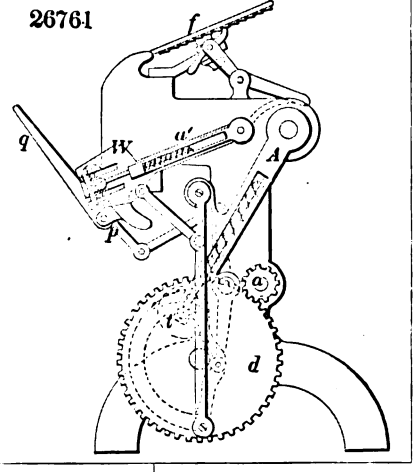

26762

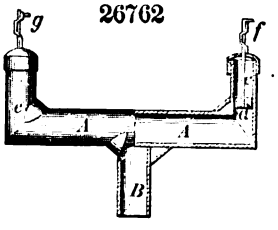

26763

26764

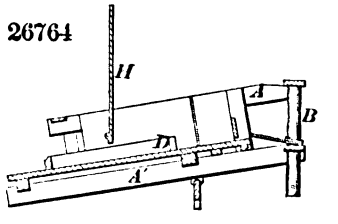

26765

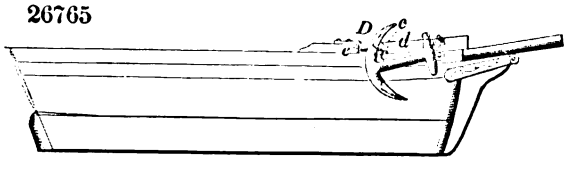

26766

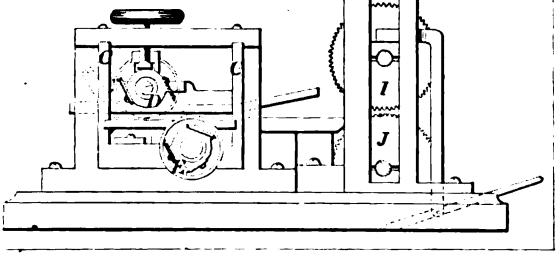

26767

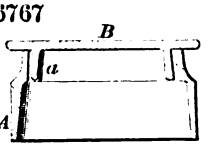

26768

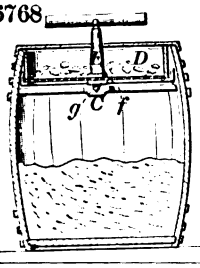

26769

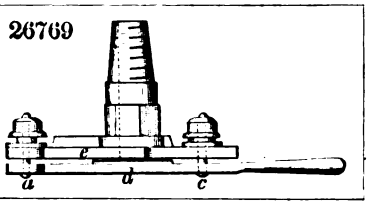

26771

Fig. 1

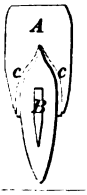

Fig. 2

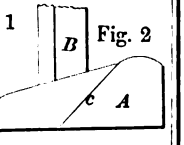

26770

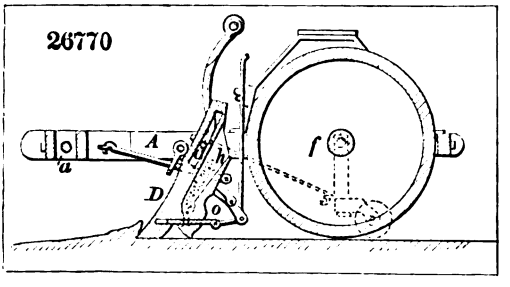

26774

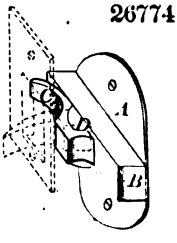

26773

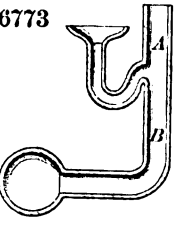

26772

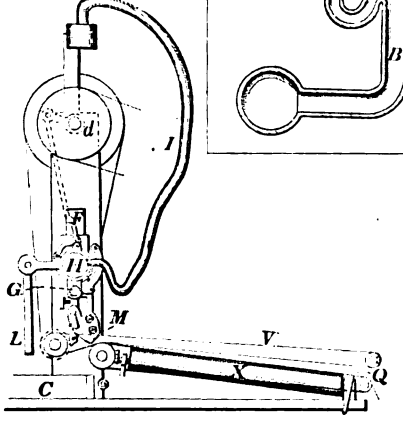

26775

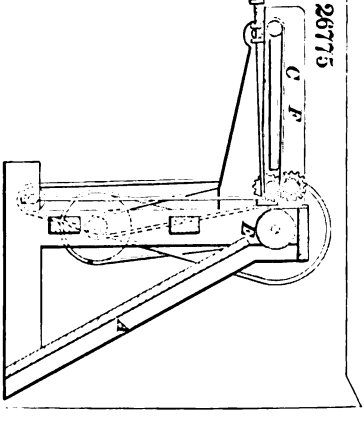

26758

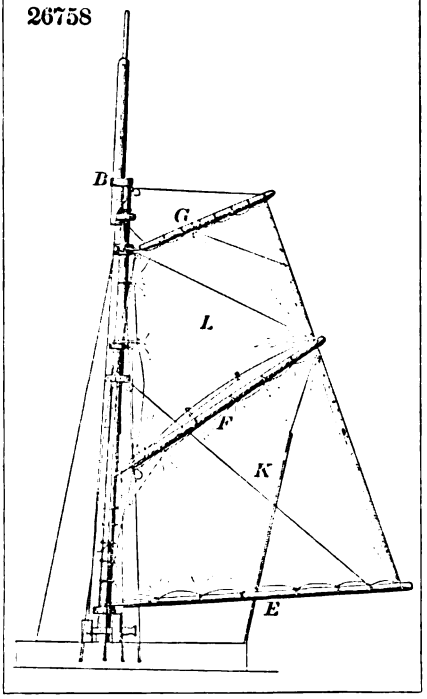

26759

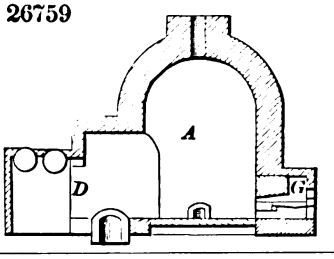

26760

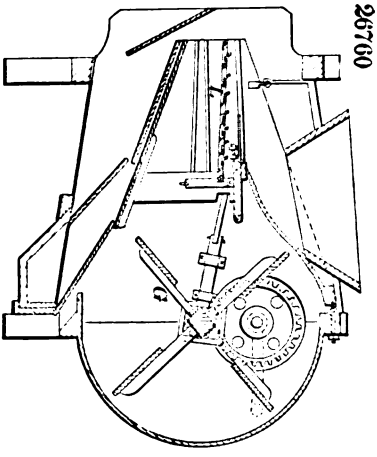

26761

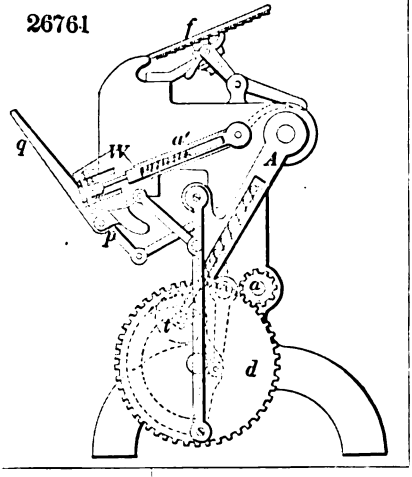

26762

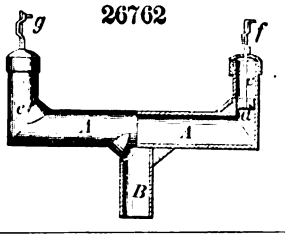

26763

26764

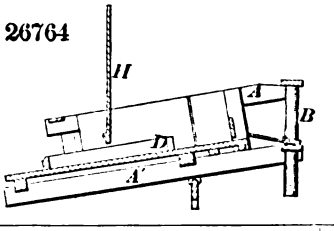

26765

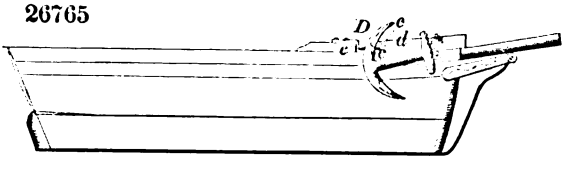

26766

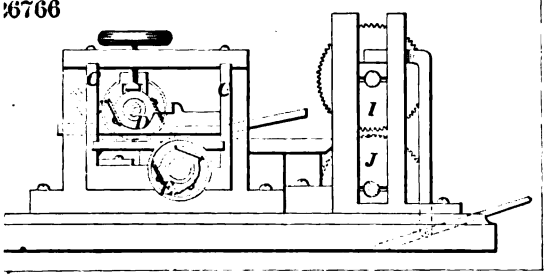

26767

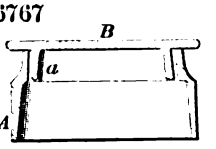

26768

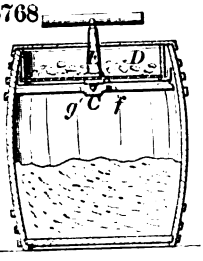

26769

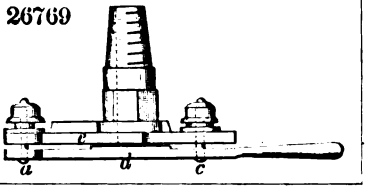

26771

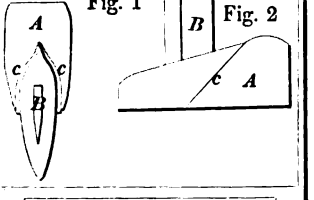

26770

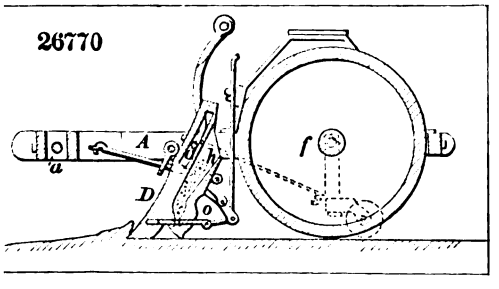

26774

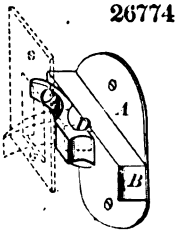

26773

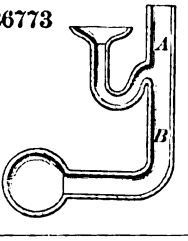

26772

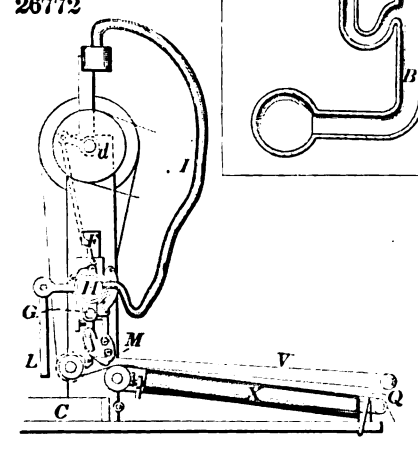

26775

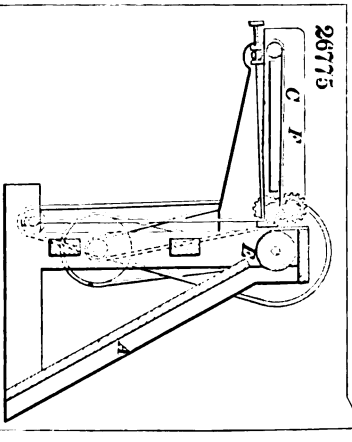

26776

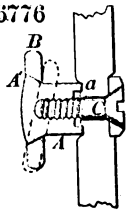

26777

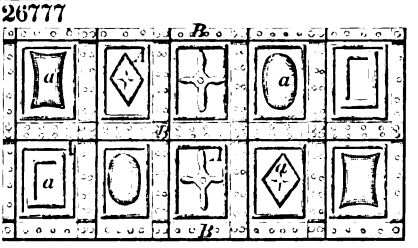

26778

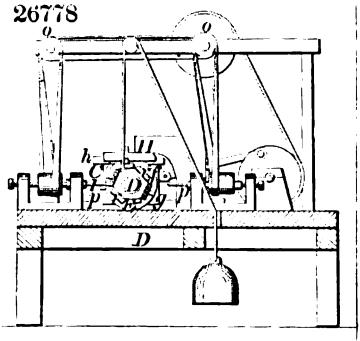

26779

26781

26782

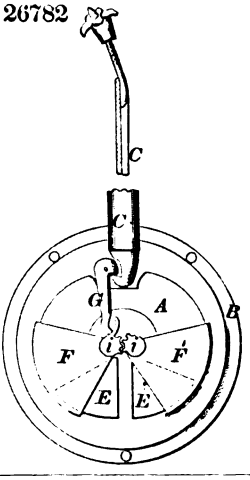

26783

Fig. 1

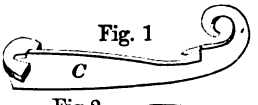

Fig 2

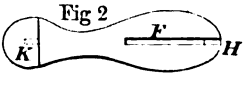

Fig. 3

26784

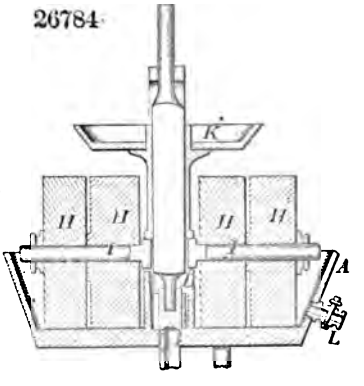

26785

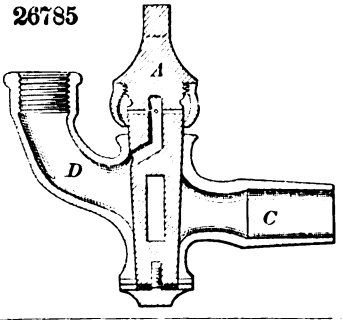

26786

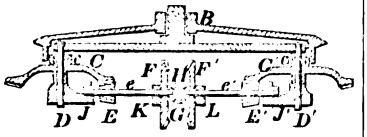

26787

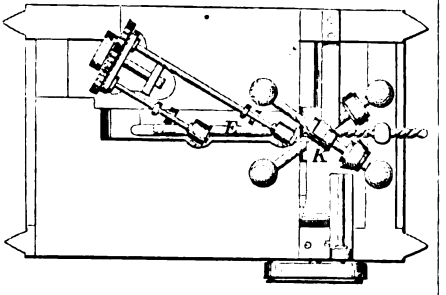

26788

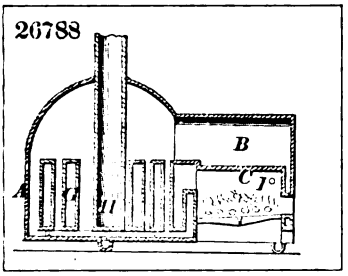

26789 Fig. 1

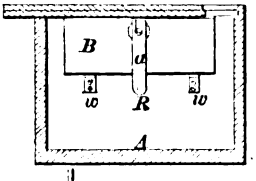

Fig 2

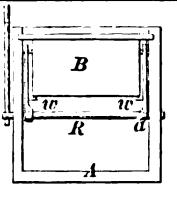

26790

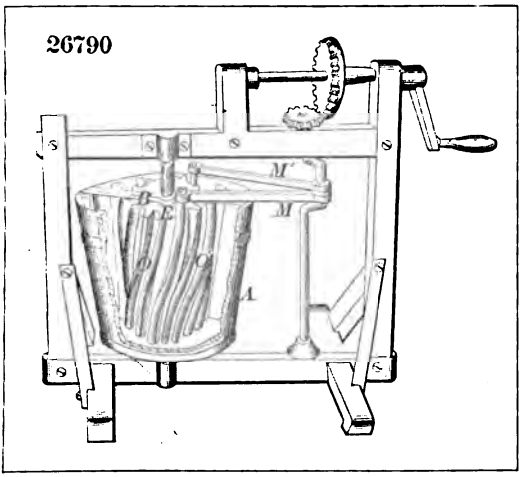

26792

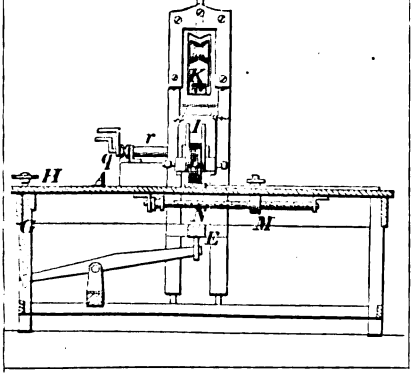

26791

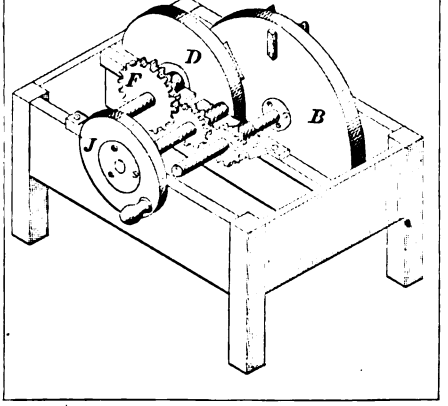

26776

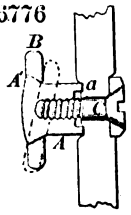

26777

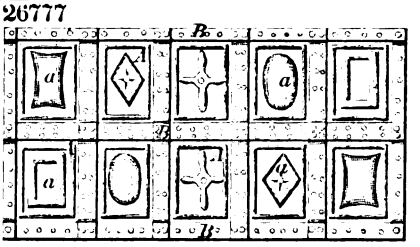

26778

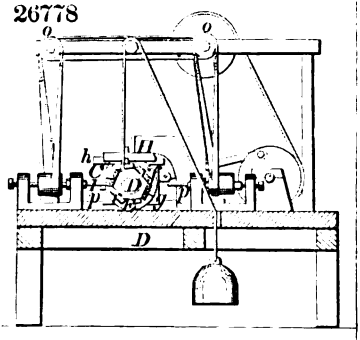

26779

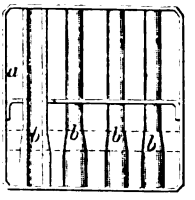

26781

26782

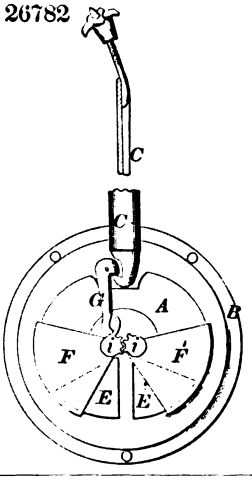

26783

Fig. 1

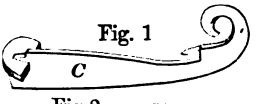

Fig 2

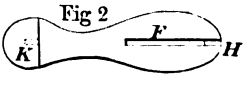

Fig. 3

26784

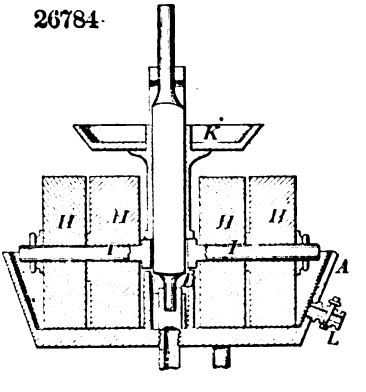

26785

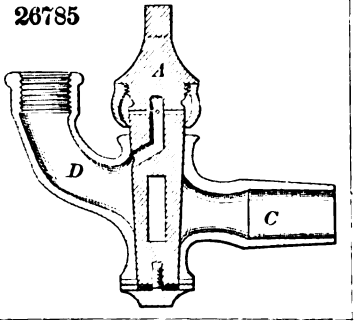

26786

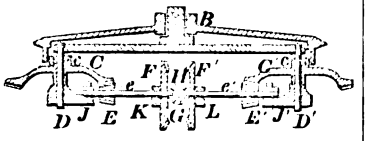

26787

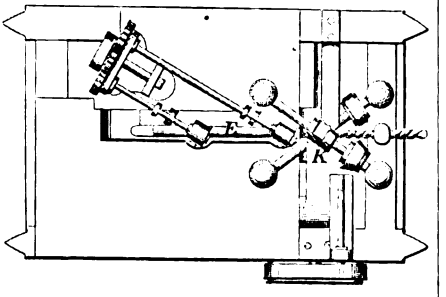

26788

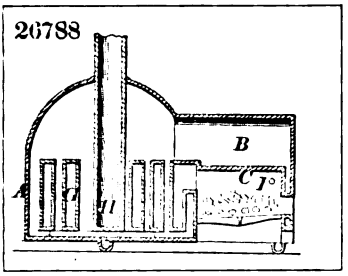

26789 Fig. 1

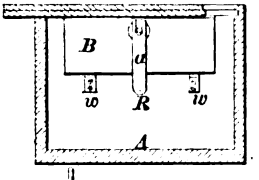

Fig 2

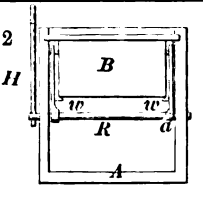

26790

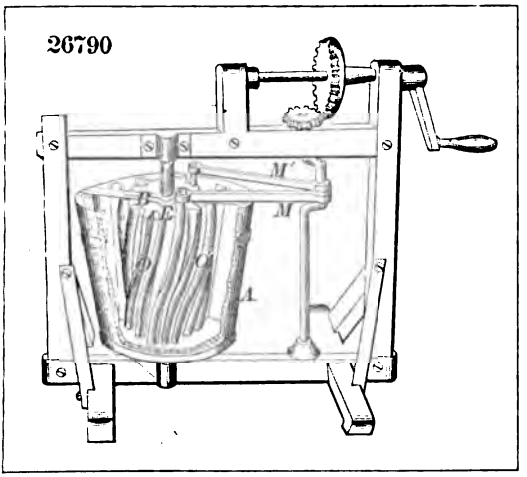

26792

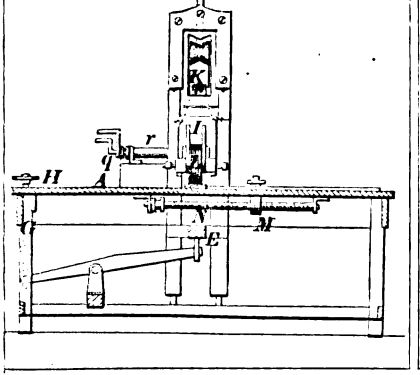

26791

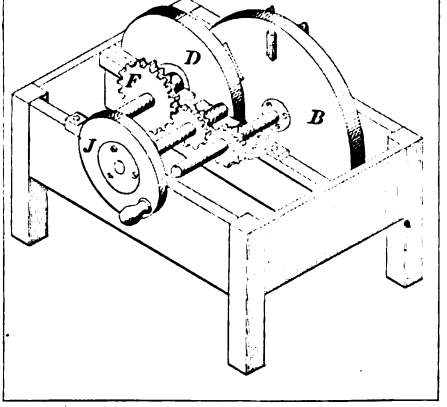

26793

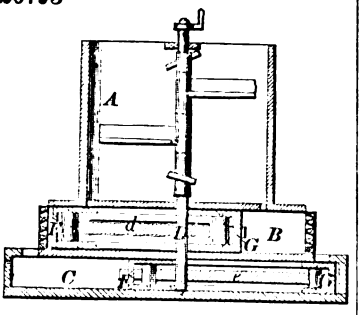

26794

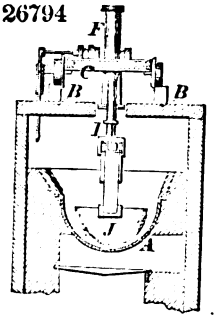

26796

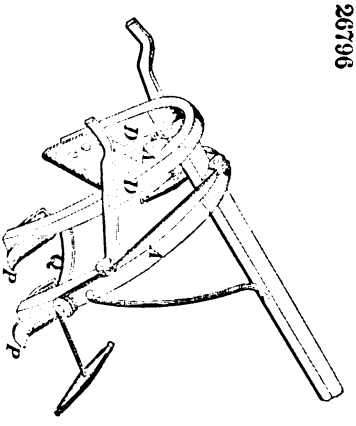

Fig. 1

26795

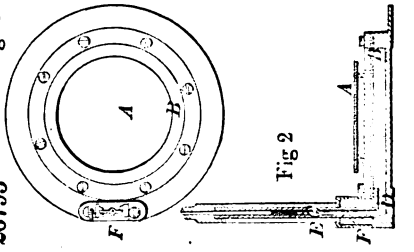

26797

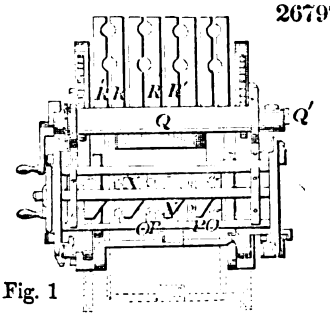

Fig. 1

Fig 2

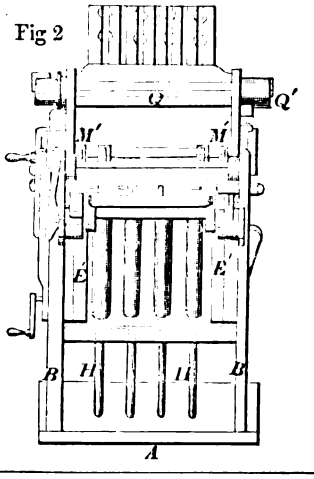

26798

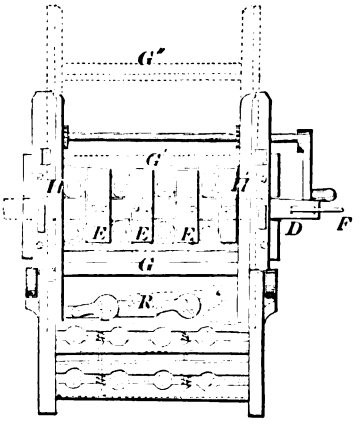

26801

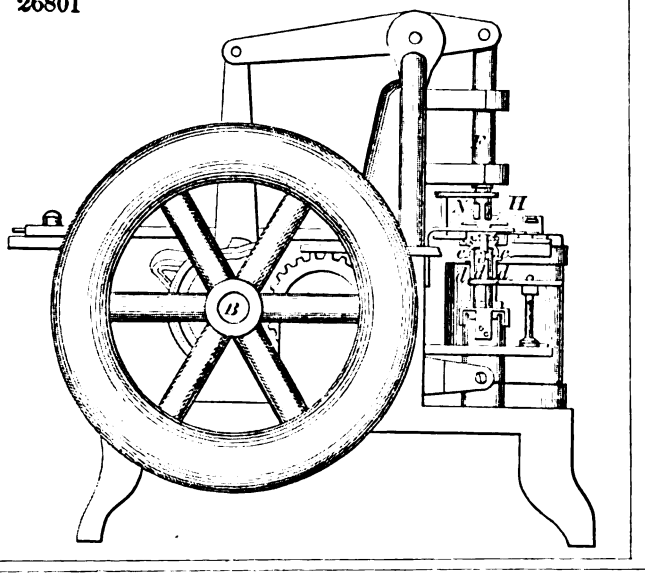

26802

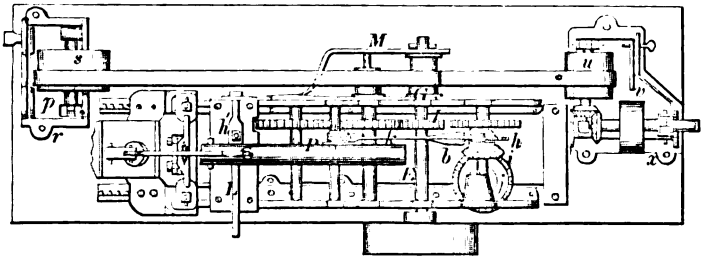

26803

26804

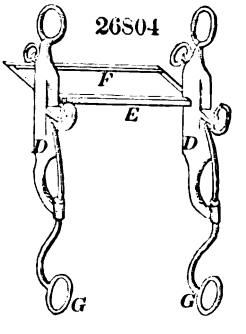

26806

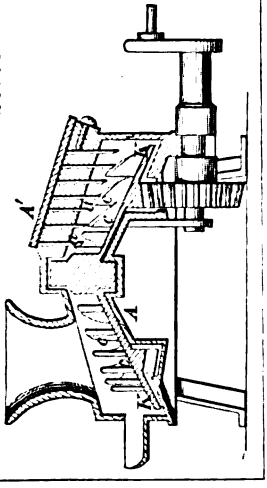

26807

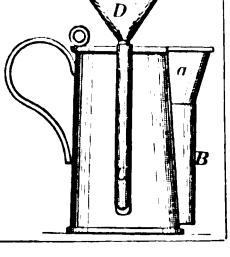

26805

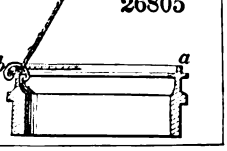

26808

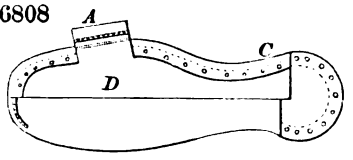

26809

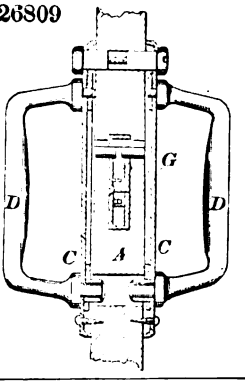

26810

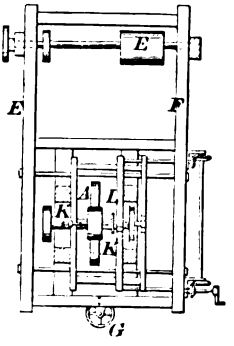

26811

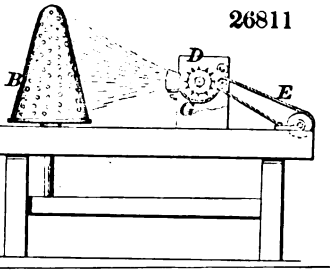

26812

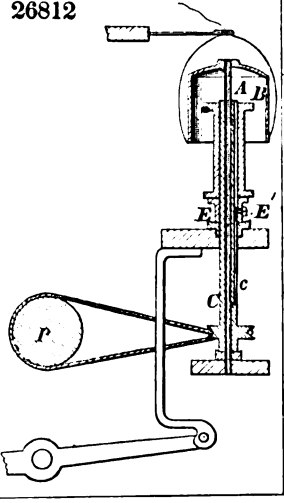

26813

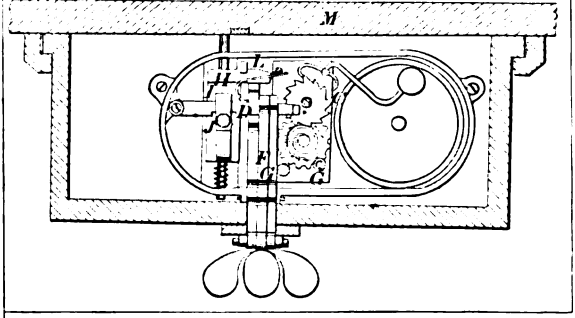

26814

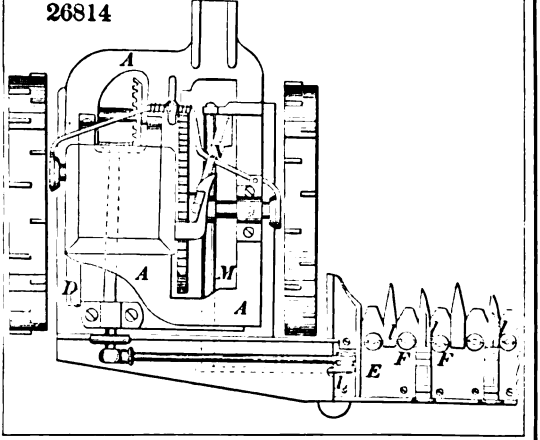

26815

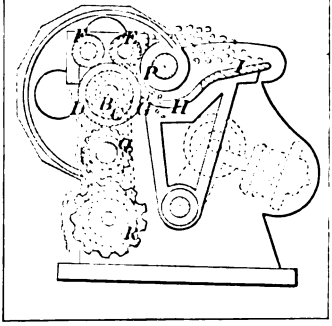

26816

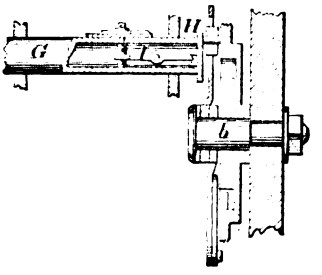

26817

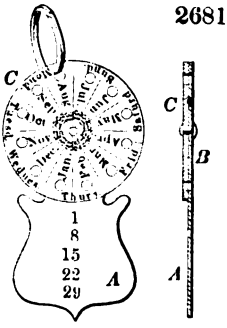

26820

Fig. 1

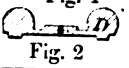

Fig. 2

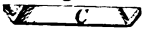

Fig. 3

Fig. 4

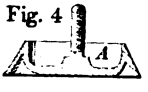

26818

Fig. 1

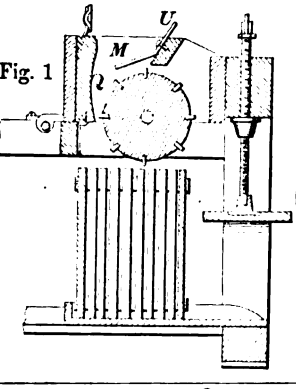

Fig. 2

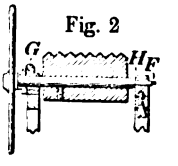

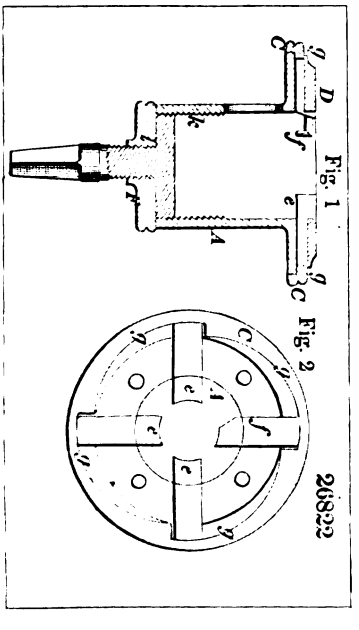

26819

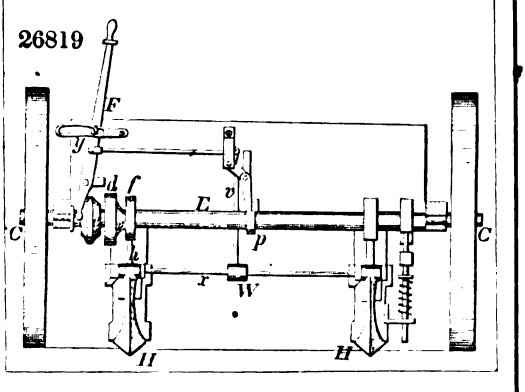

26821

26823

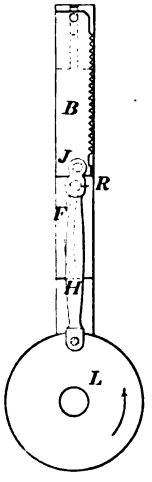

26825

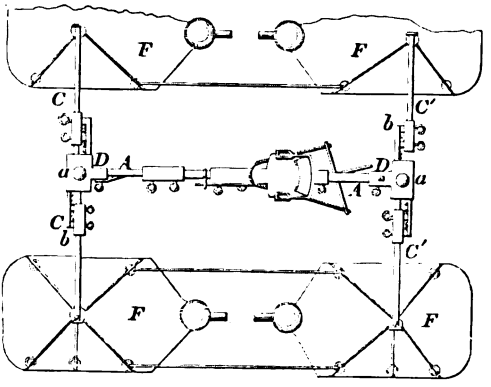

26824.

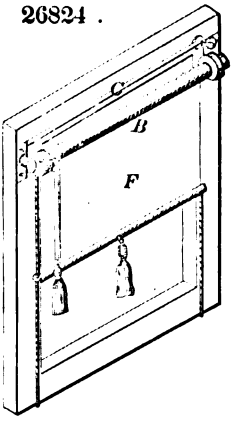

26826

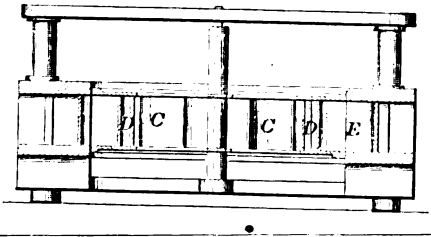

26827

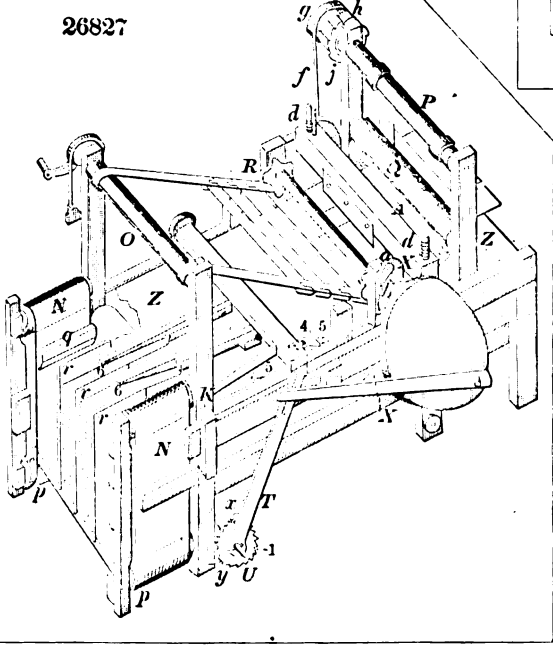

26828

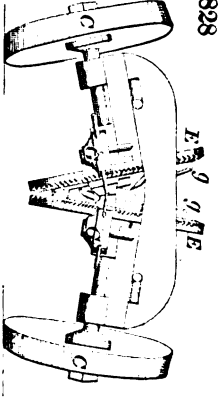

5829

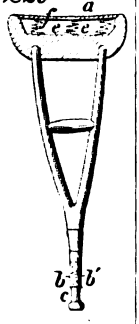

26830

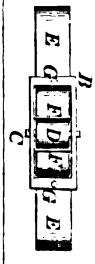

26831

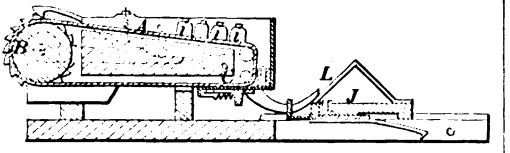

26832

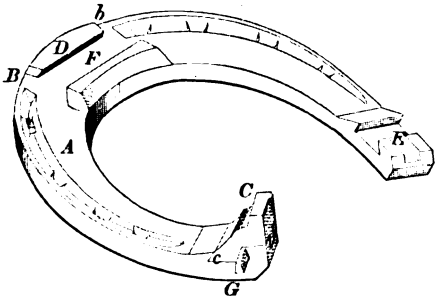

26833

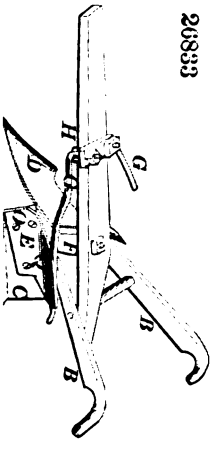

26834

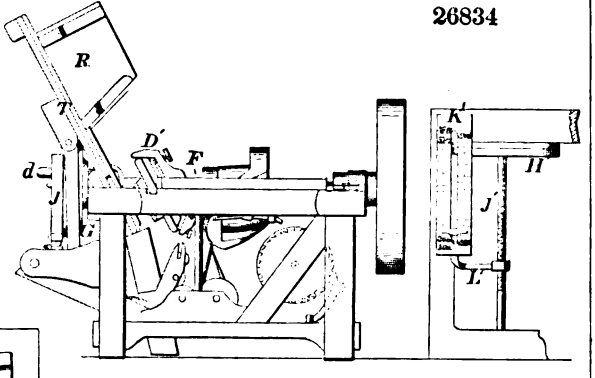

26835

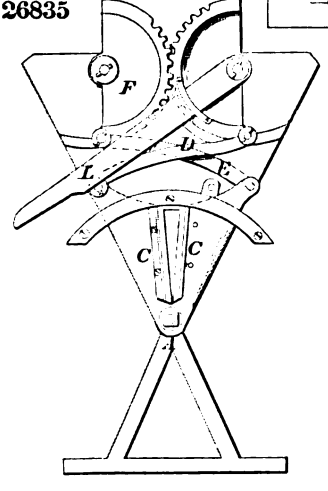

26836

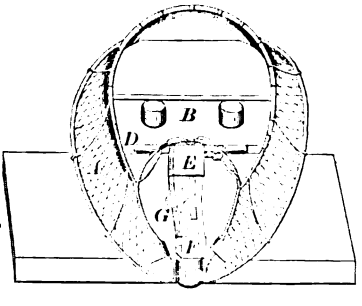

26793

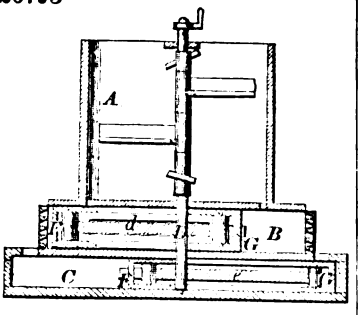

26794

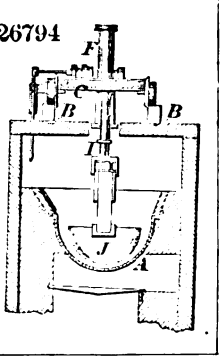

26795

Fig. 1

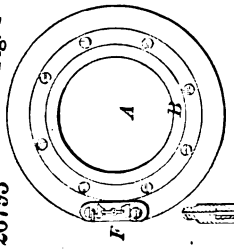

Fig 2

26796

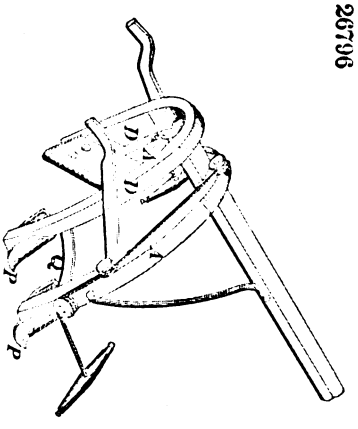

26797

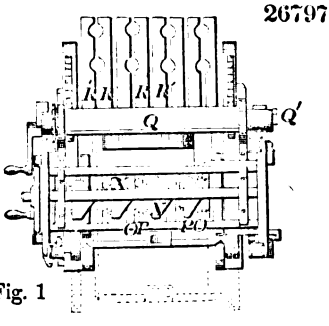

Fig. 1

Fig 2

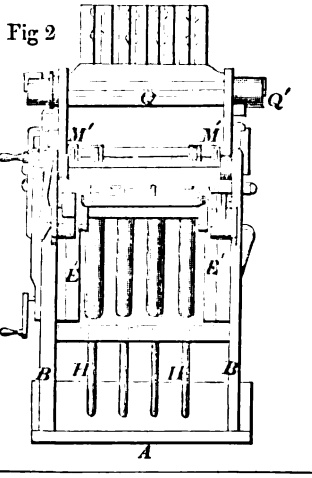

26798

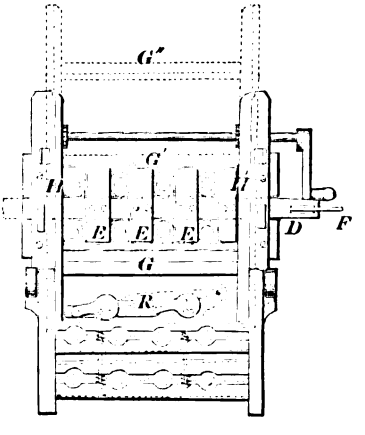

26801

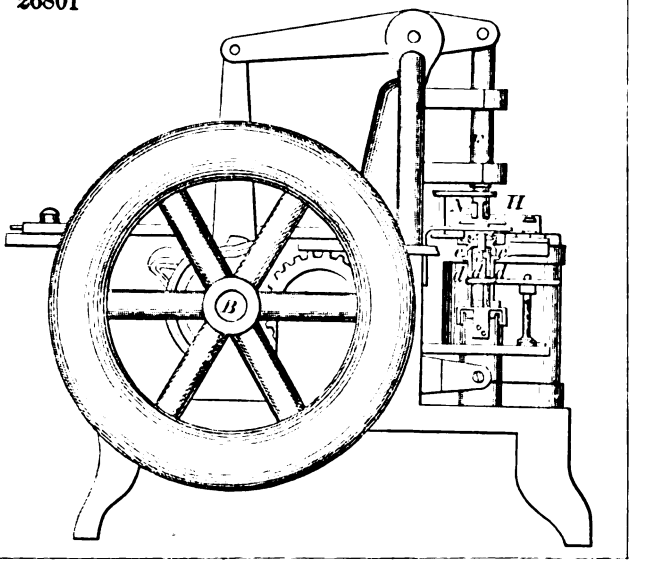

26802

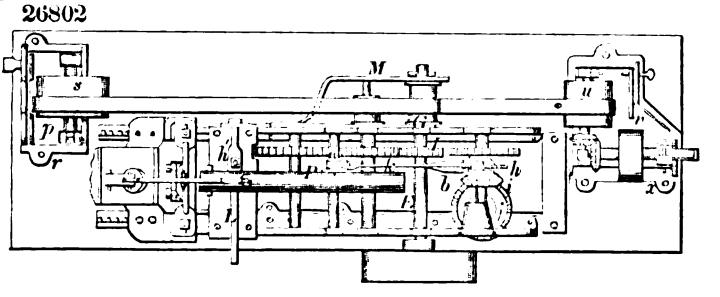

26803

26804

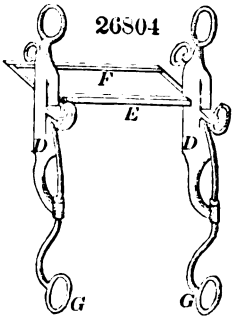

26806

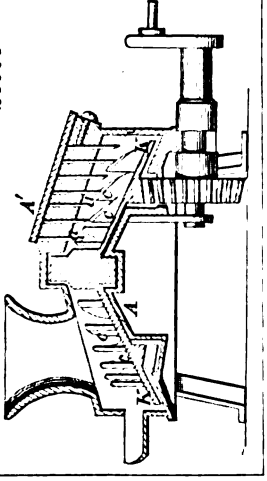

26807

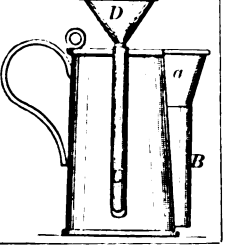

26805

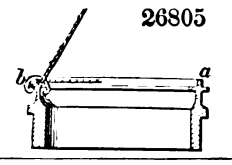

26808

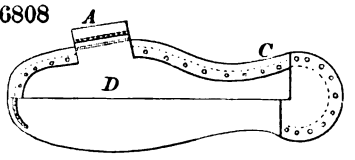

26809

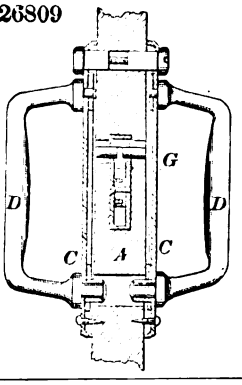

26810

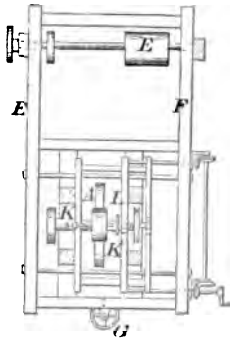

26811

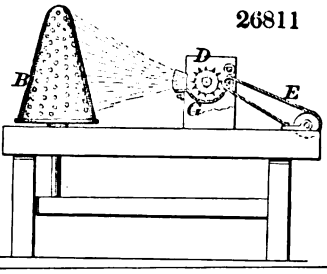

26812

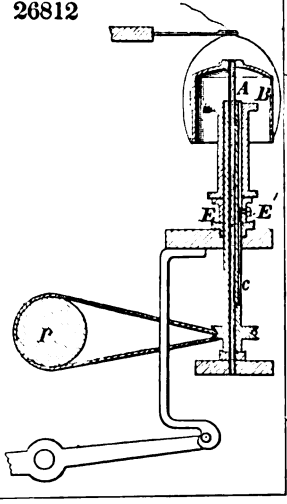

26813

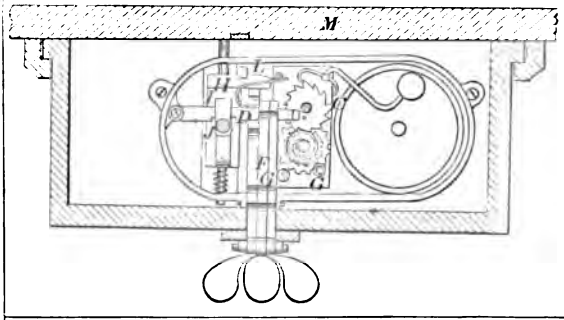

26814

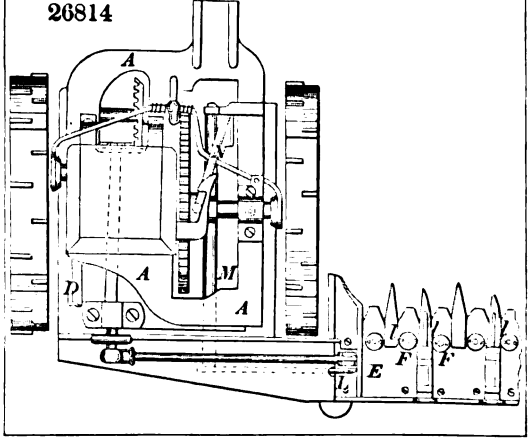

26815

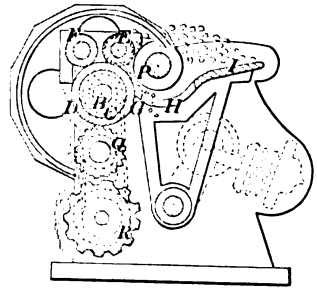

26816

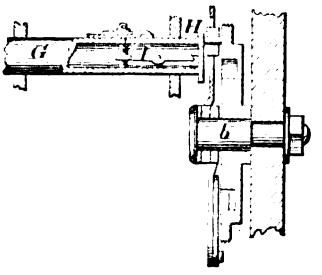

26817

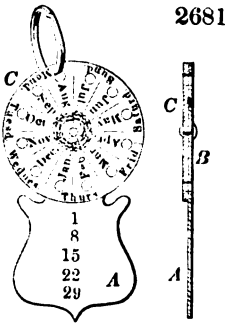

26820

Fig. 1

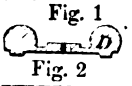

Fig. 2

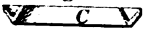

Fig. 3

Fig. 4

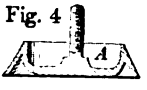

26818

Fig. 1

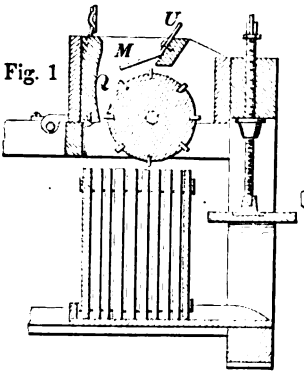

Fig. 2

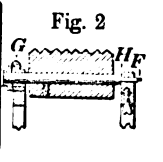

Fig. 1

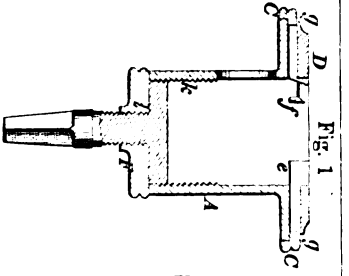

Fig. 2

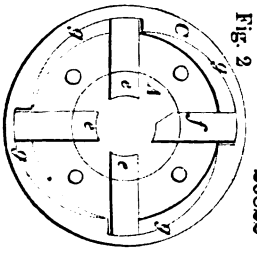

26822

26819

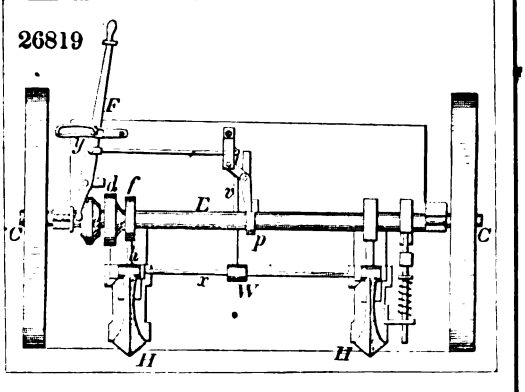

26821

26823

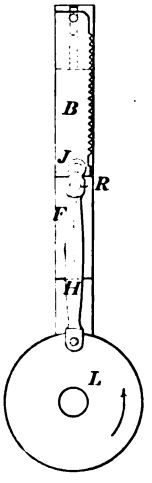

26825

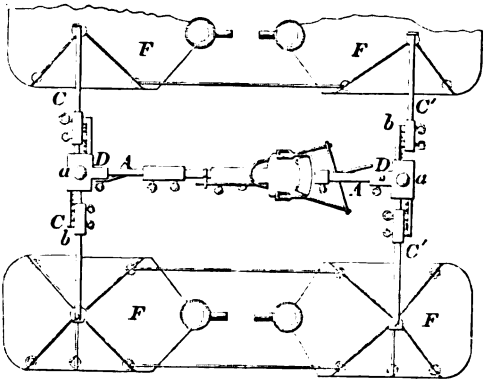

26824.

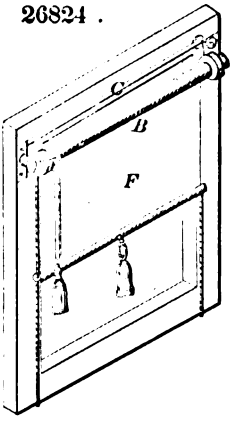

26826

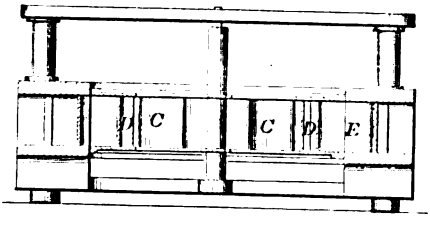

26827

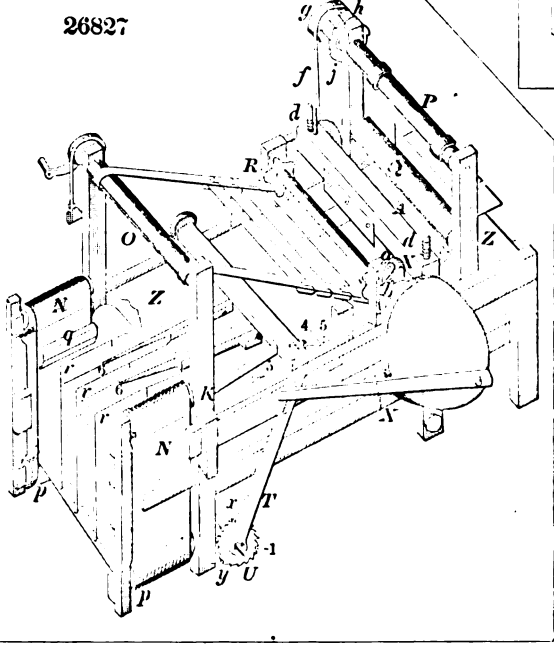

26828

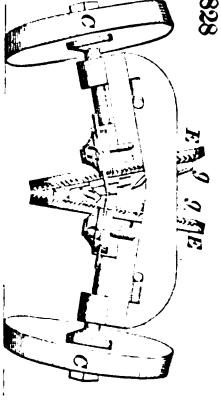

6829

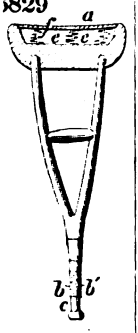

26830

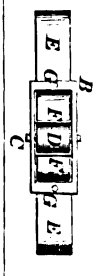

26831

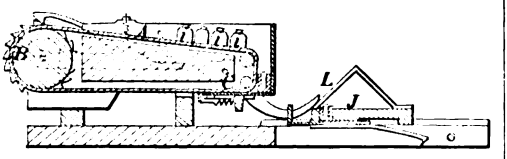

26832

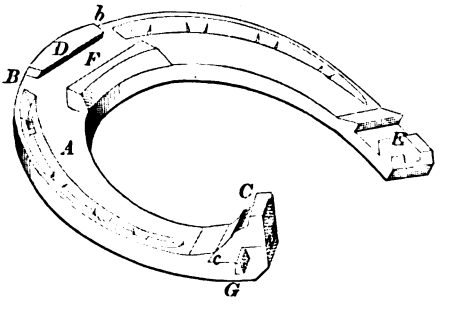

26833

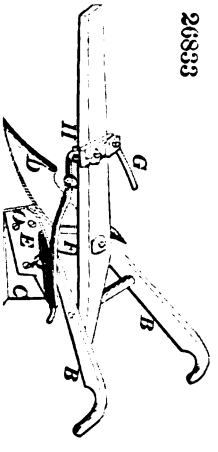

26834

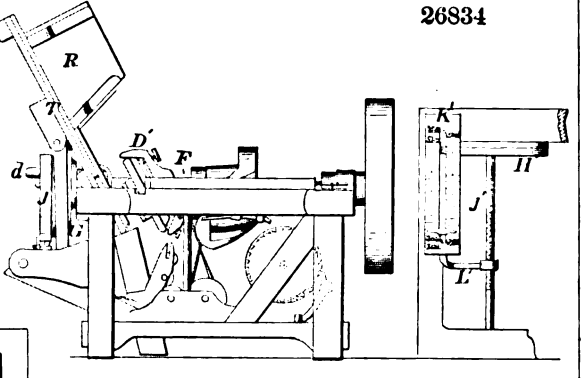

26835

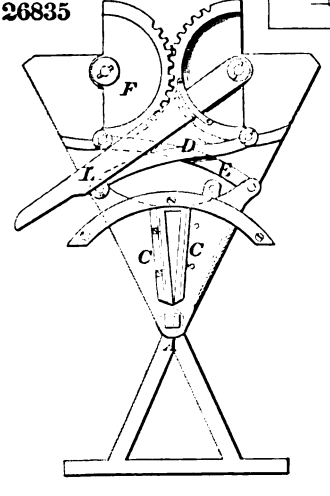

26836

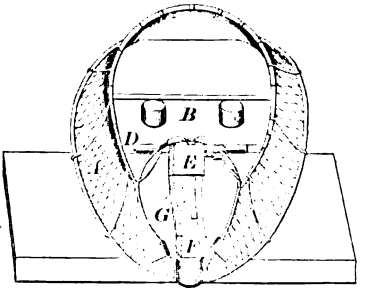

26837

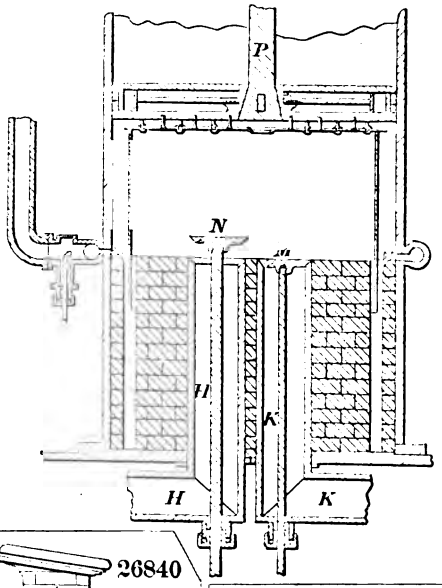

26838

26839

26840

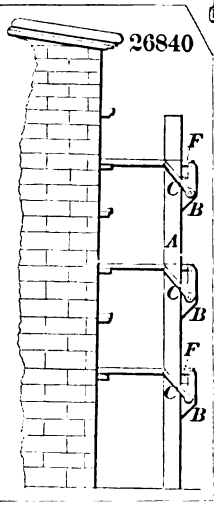

26841

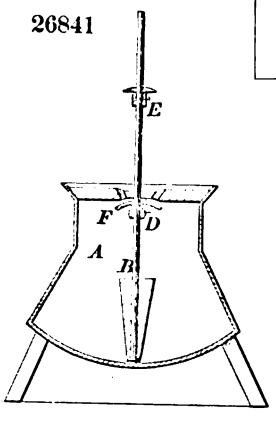

26842

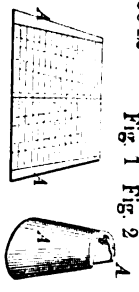

Fig. 1 Fig. 2

26844

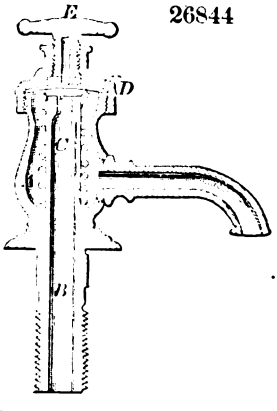

26843

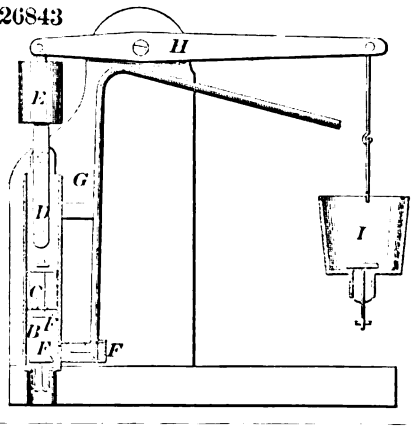

26845

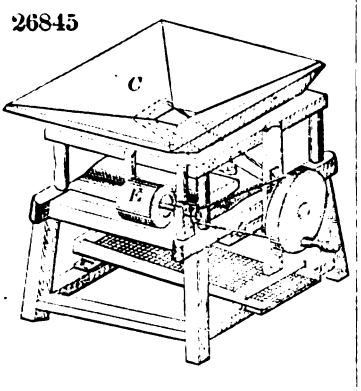

26846

26847

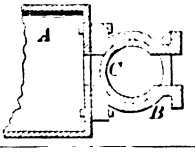

26848

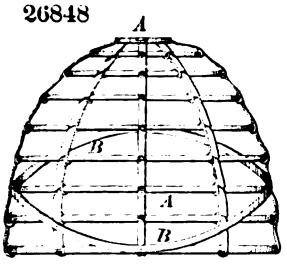

26849

Fig. 1

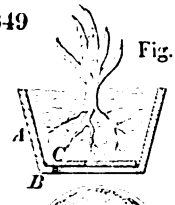

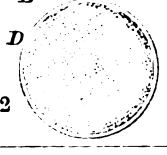

Fig. 2

26850

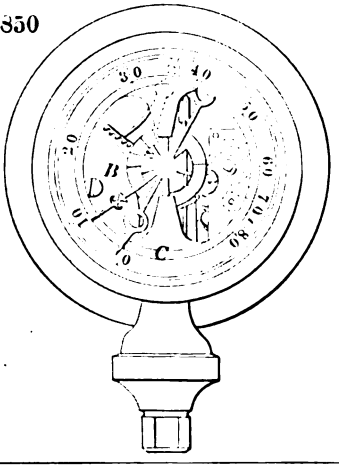

26851

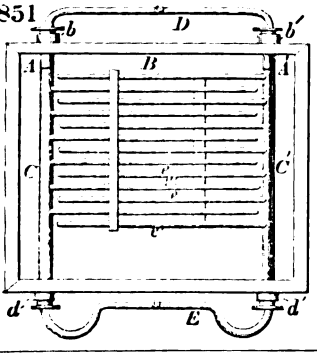

26852

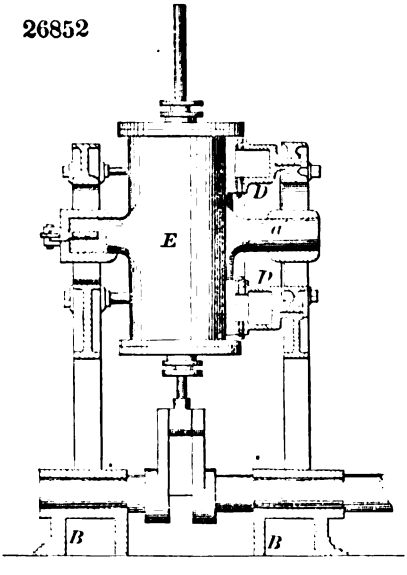

26853

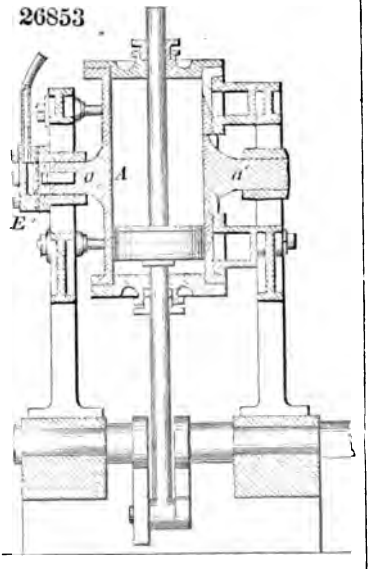

26855

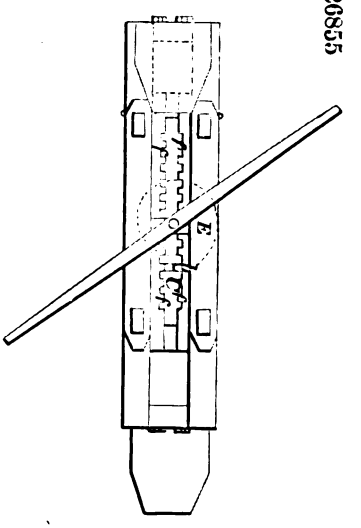

26856

Fig. 1

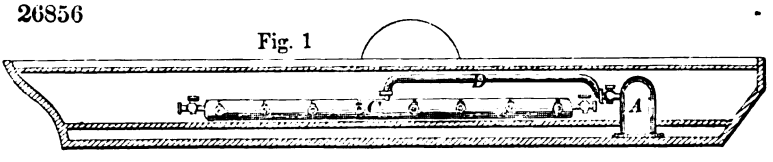

Fig. 2

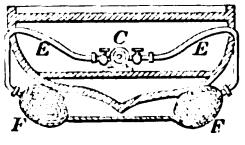

26857

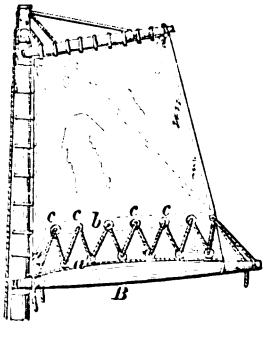

26858

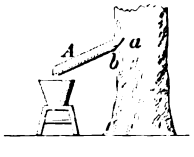

26859

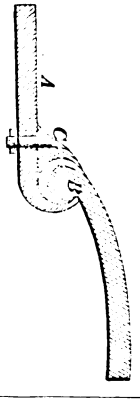

26860

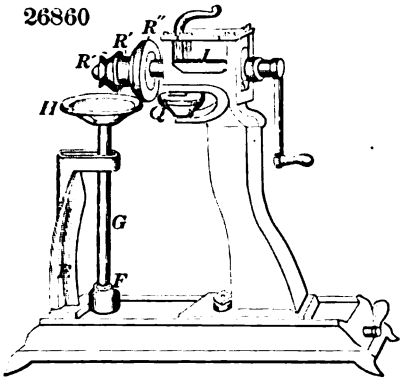

26861

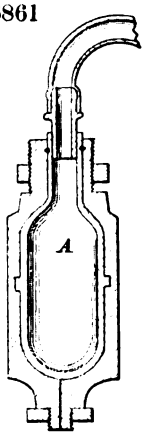

26863

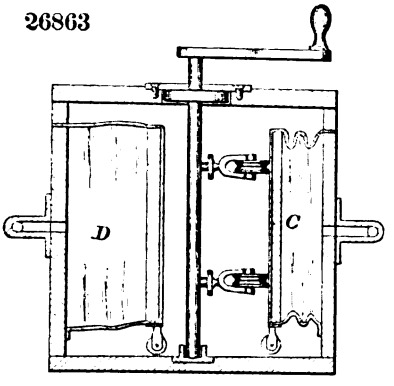

26864

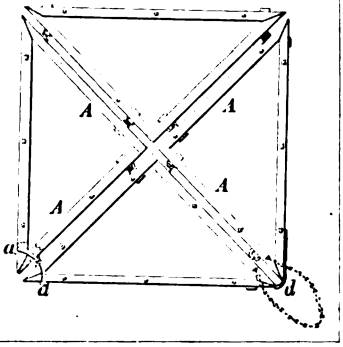

26865

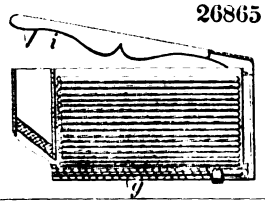

26866

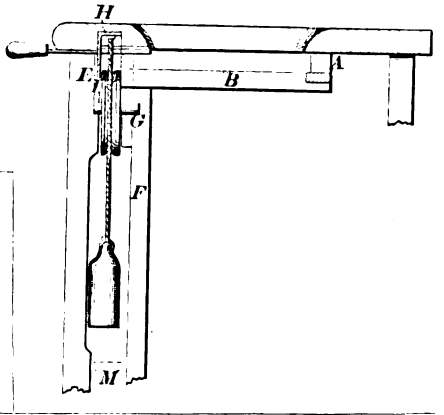

26867

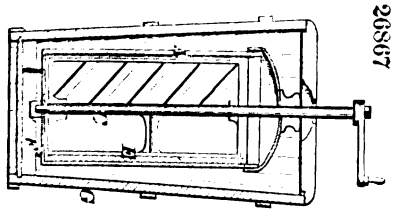

26868

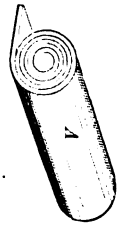

26869

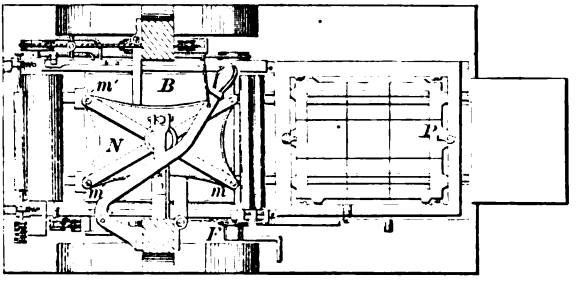

26870

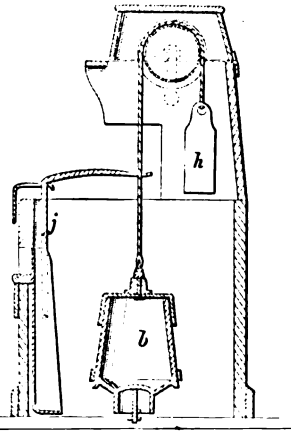

26871

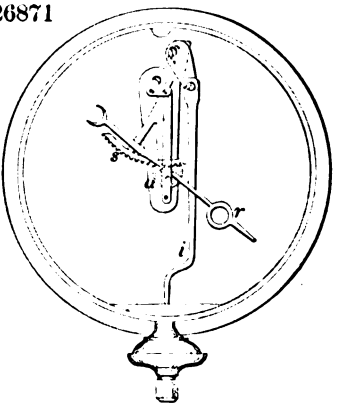

26872

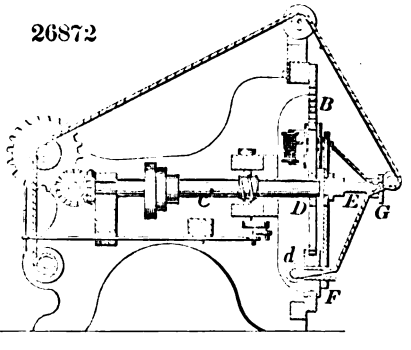

26873

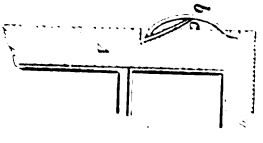

26874

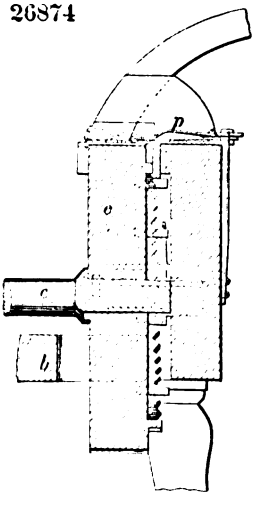

26875

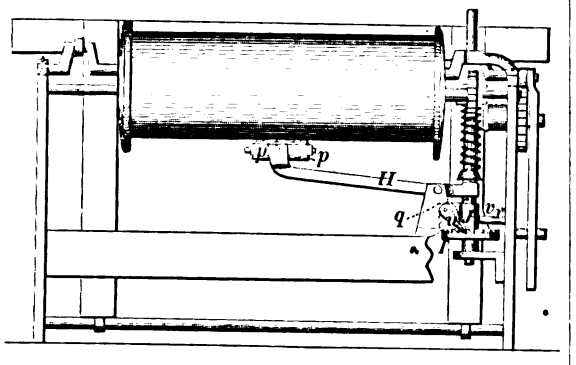

26876

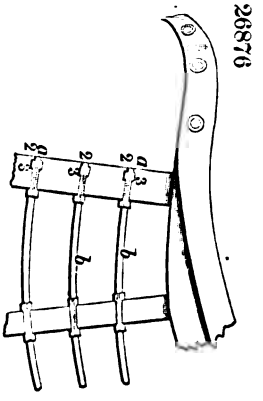

26877

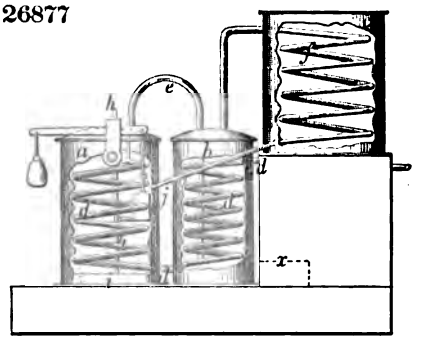

26878

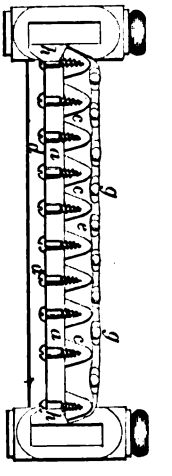

26879

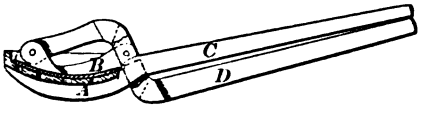

26881

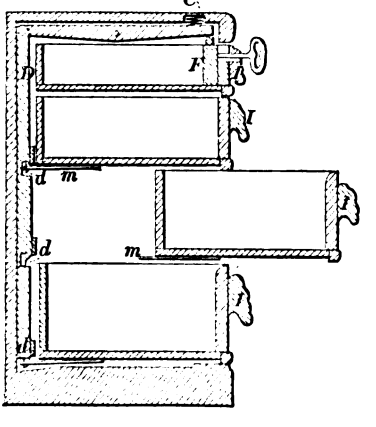

26880

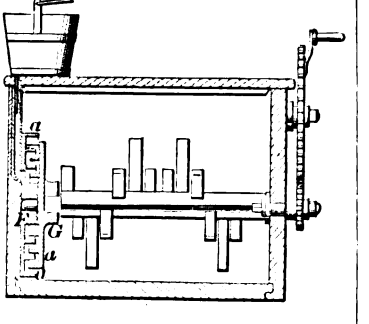

26882

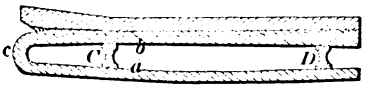

26883

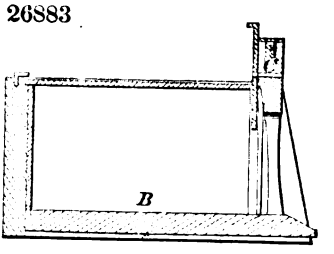

26884

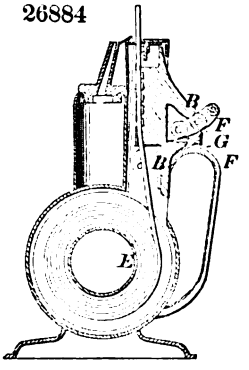

26885

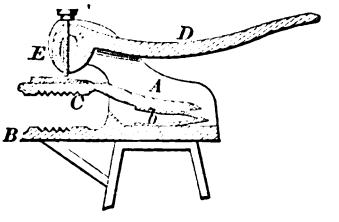

26886

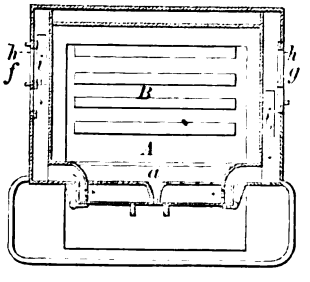

26887

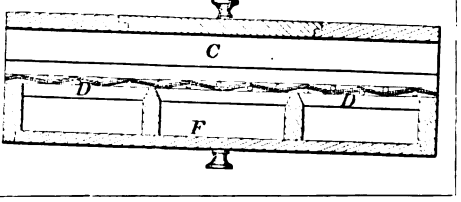

26888

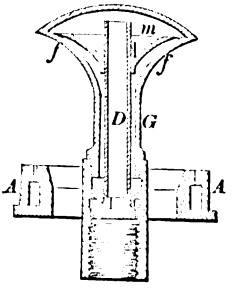

26889

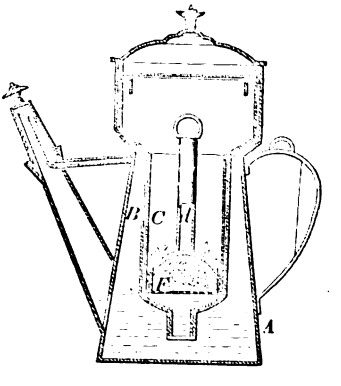

26890

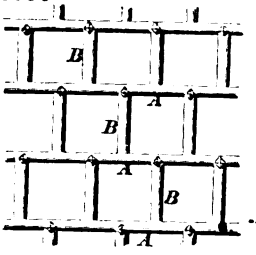

26891

26892

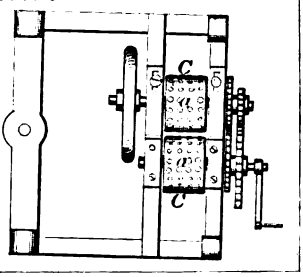

26894

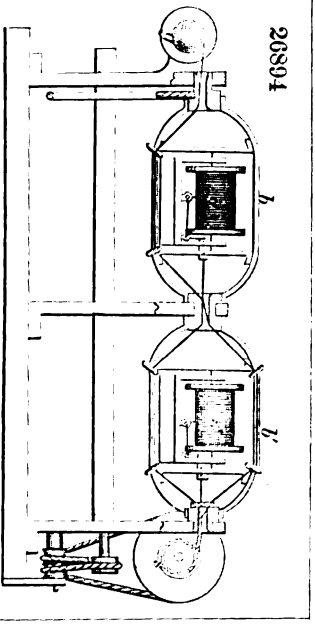

26893

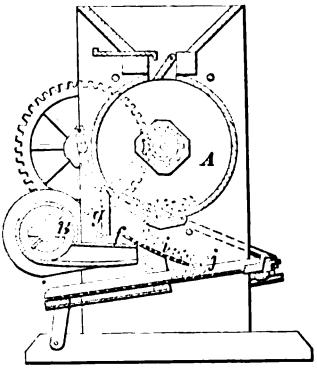

26897

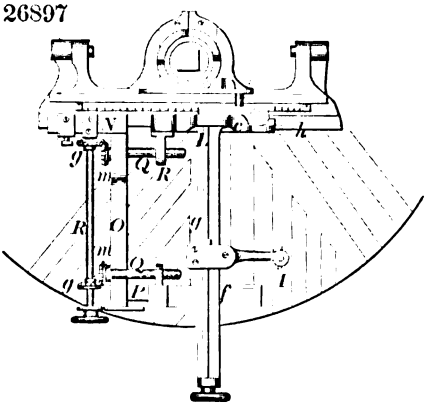

26895

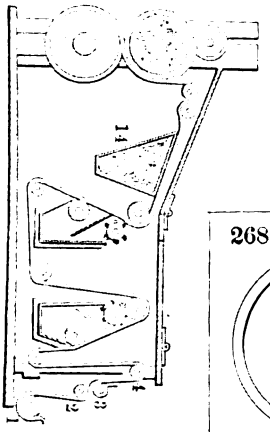

26896

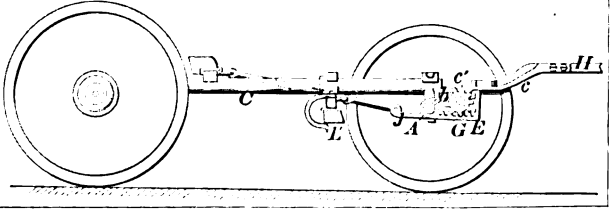

26898

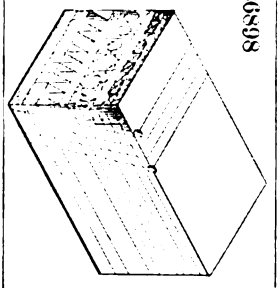

26899

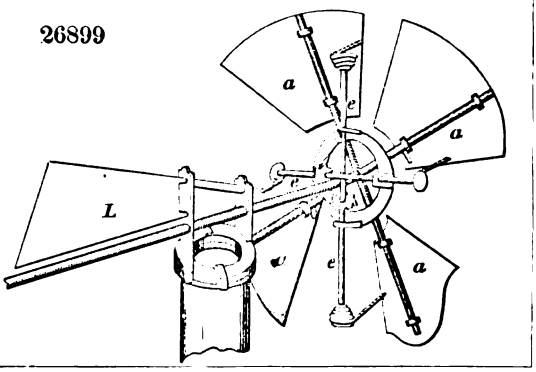

26900

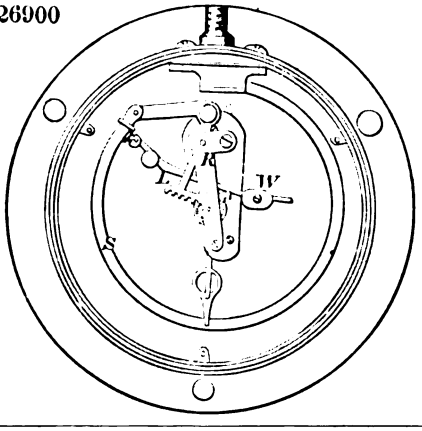

26902

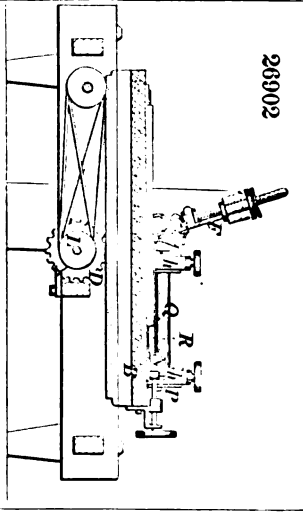

26901

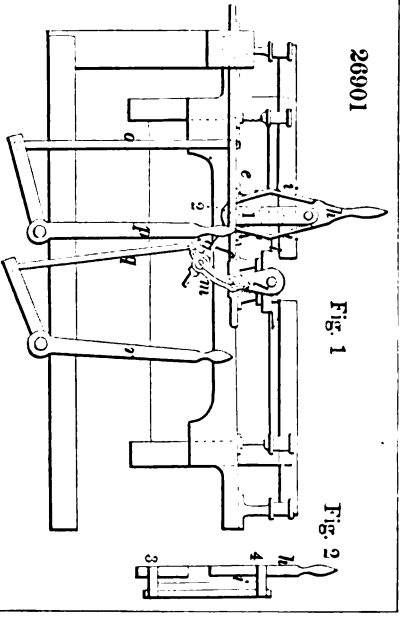

Fig. 1

Fig. 2

26903

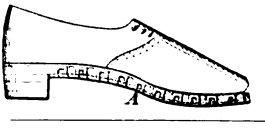

26904 Fig. 1

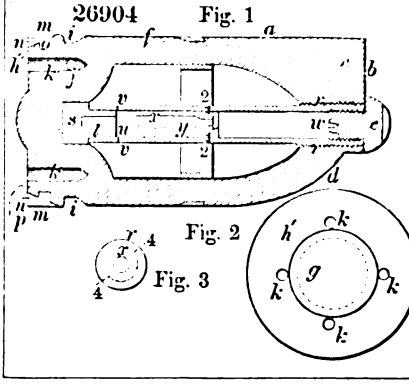

Fig. 2

Fig. 3

26905

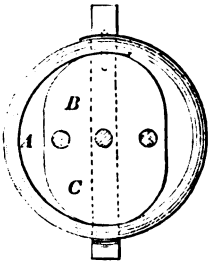

26907

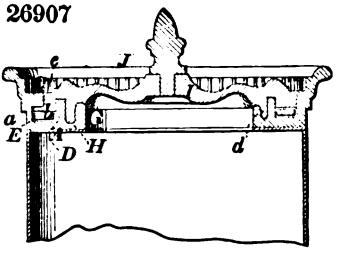

26906

26908

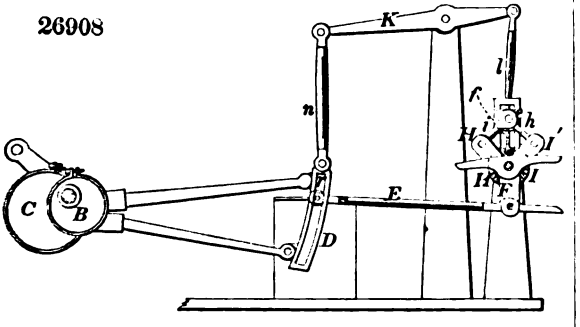

26909

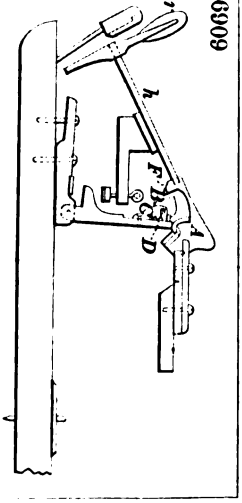

26911

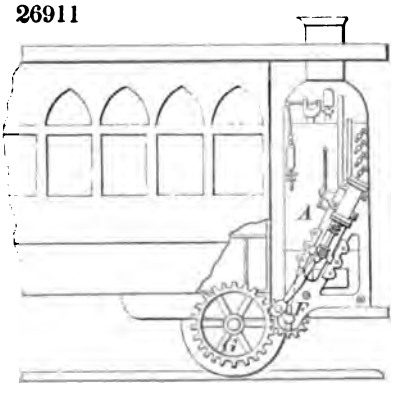

26910

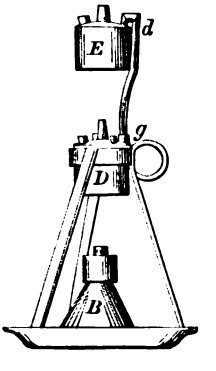

26912

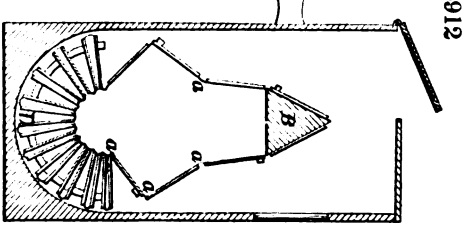

26913

Fig. 1

Fig. 2

26914

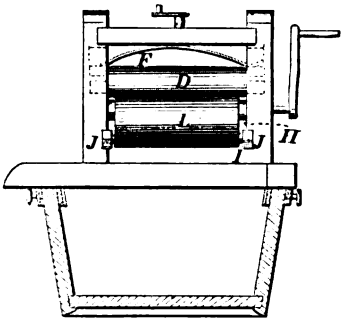

26916

26917

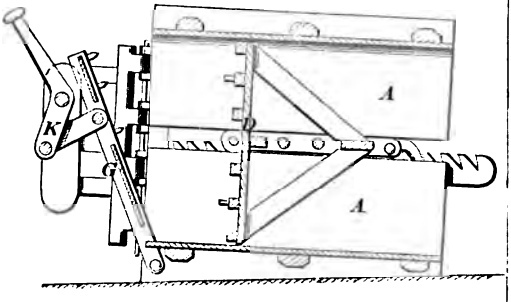

26915

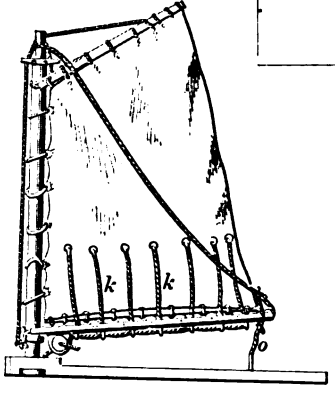

26918

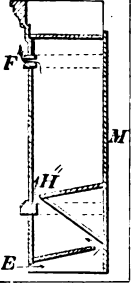

26920

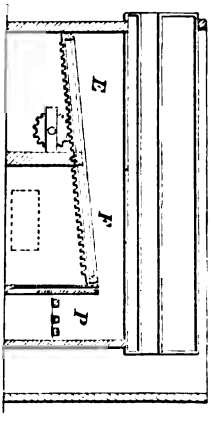

26919

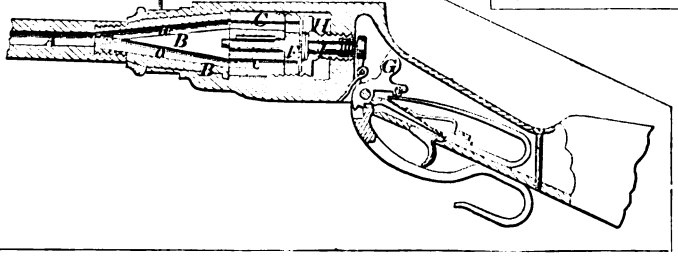

26921

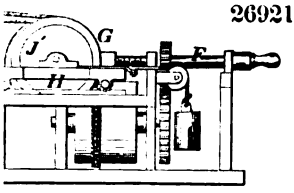

26922

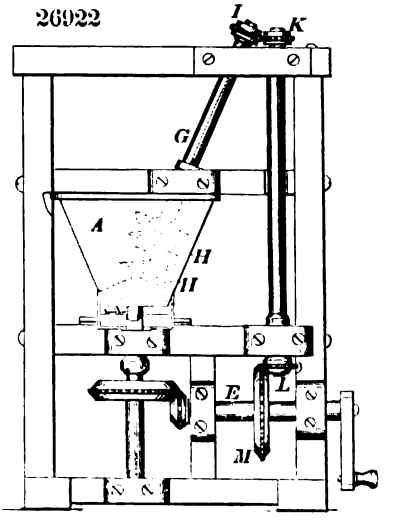

6924

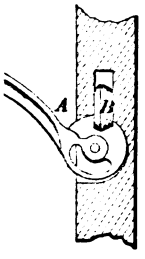

26925

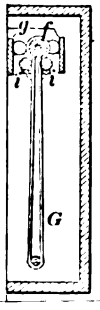

6926

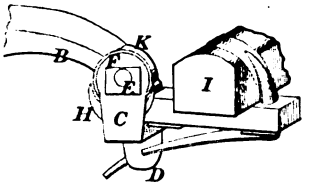

26927

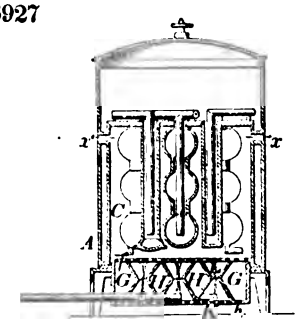

6928

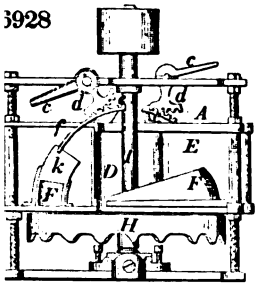

26930

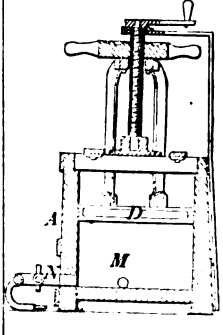

26931

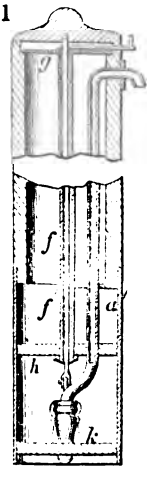

26932

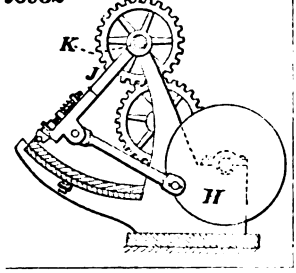

26933

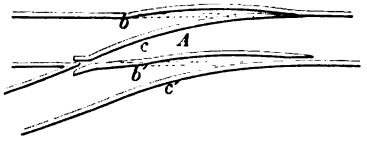

26934

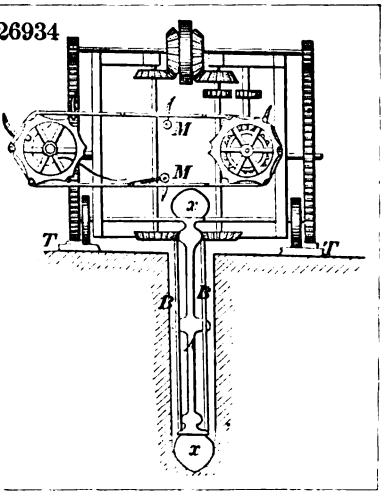

26935

26936

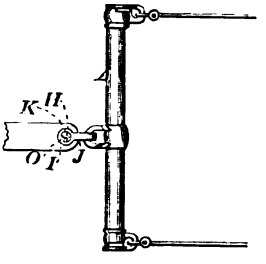

26937

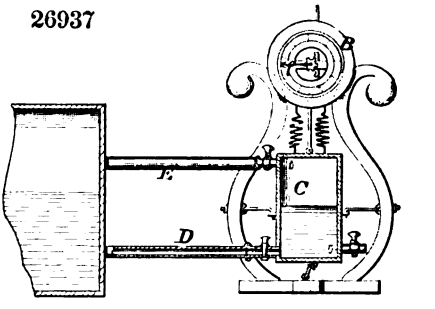

26938

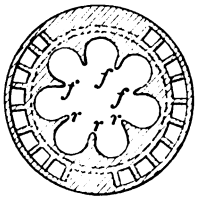

26939

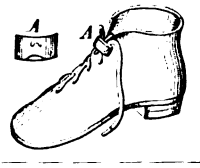

26940

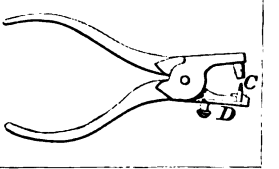

26941

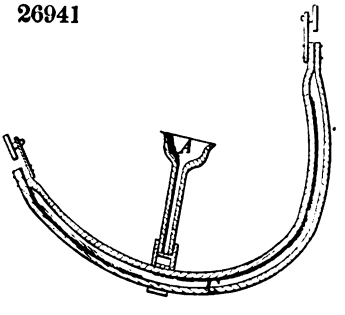

26942

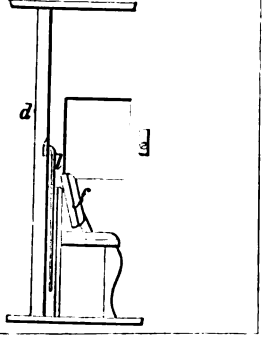

26943

Fig. 1

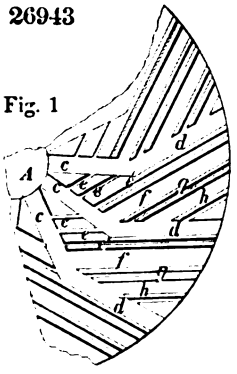

Fig. 2

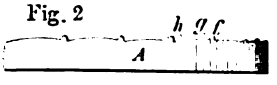

26944 Fig. 1

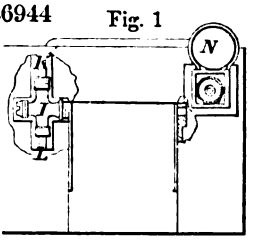

Fig. 2

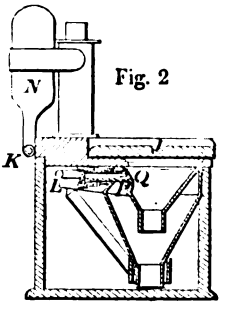

26945

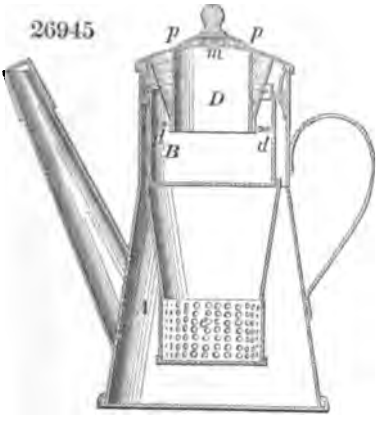

26946

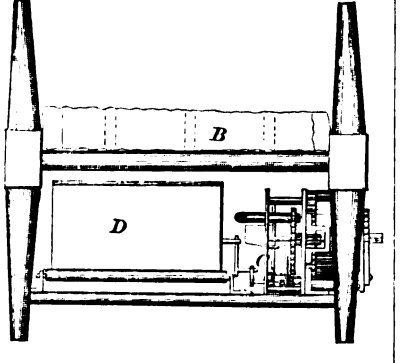

26947

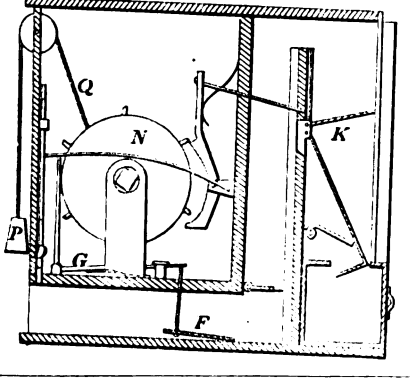

26948

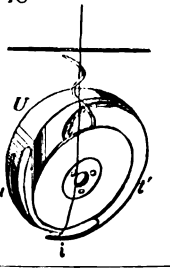

26949

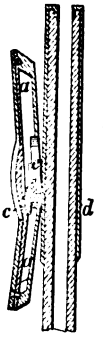

26950

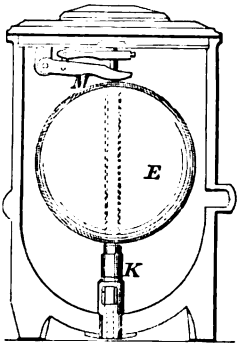

26951

26952

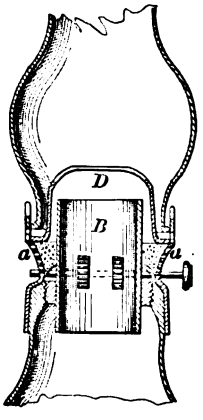

26953

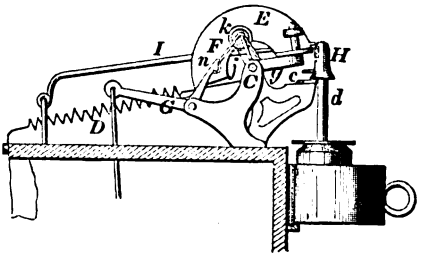

26954

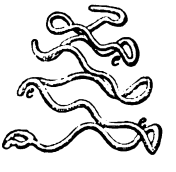

26955

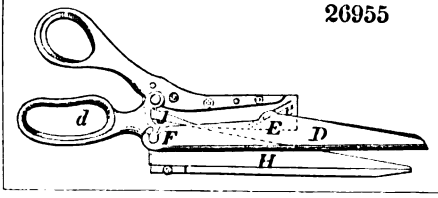

26957

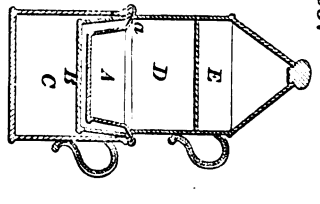

26956

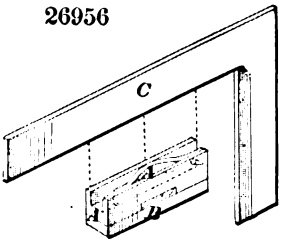

26958

26959

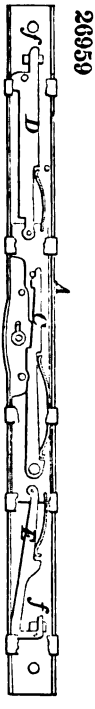

26960

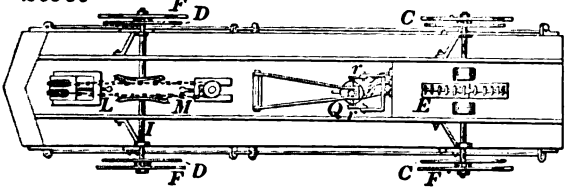

26963

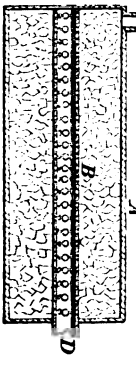

26962

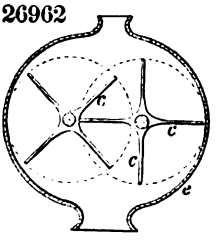

26961 Fig. 1

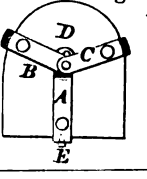

Fig. 2

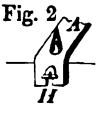

26964

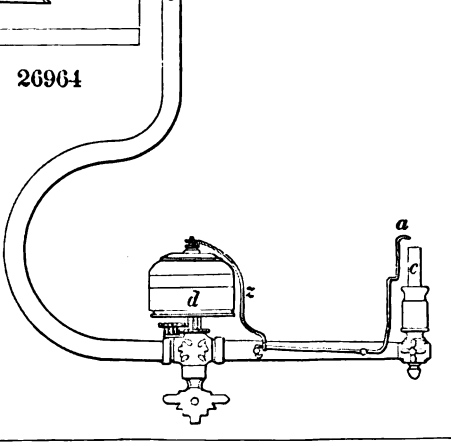

26965

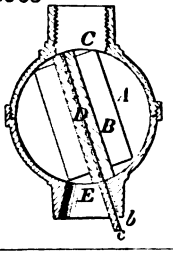

26967

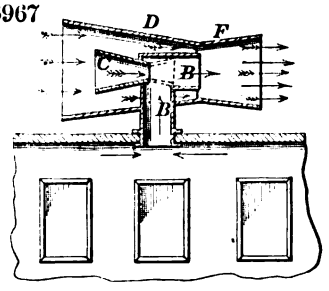

26968

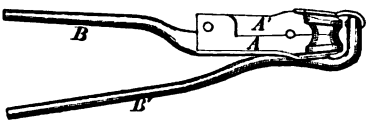

26969

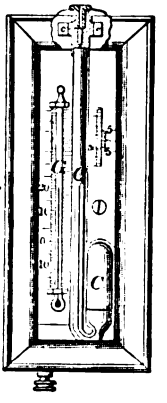

26971

Fig. 1

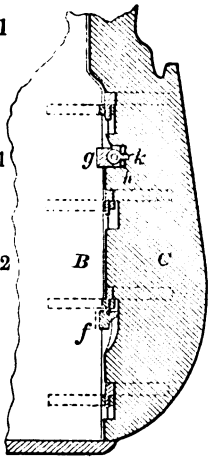

Fig. 2

26970

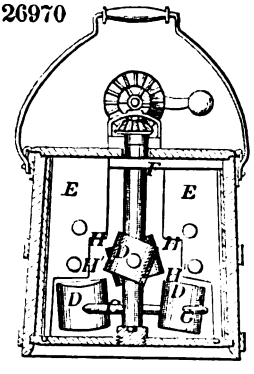

26973

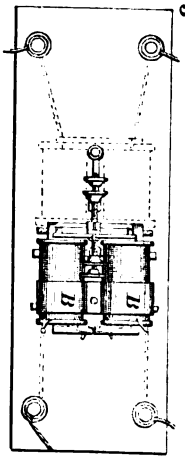

26972

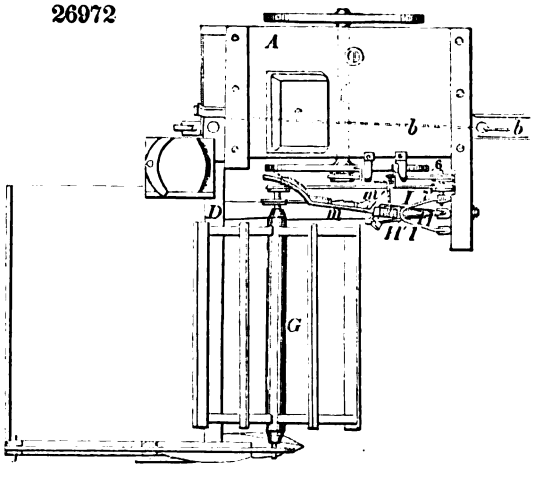

26974

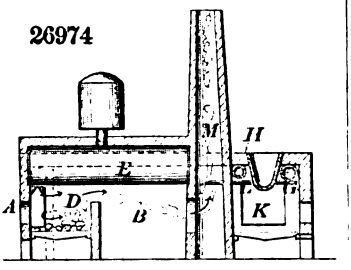

26975

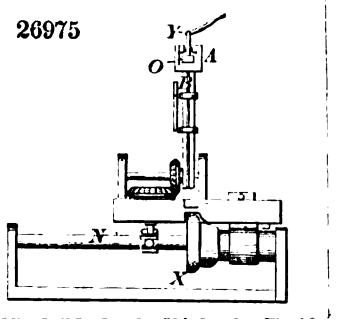

26976

Fig. 1

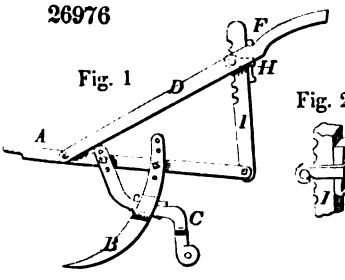

Fig. 2

26977

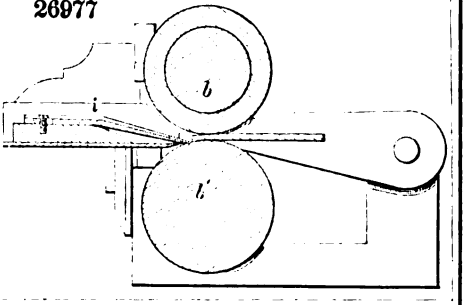

26979

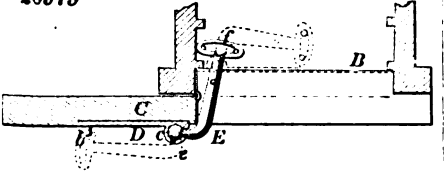

26980

Fig. 1

Fig. 2

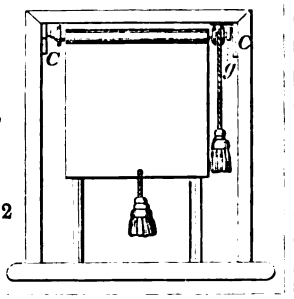

26981

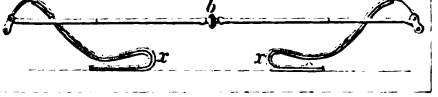

26983

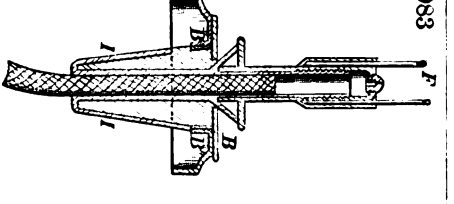

26984

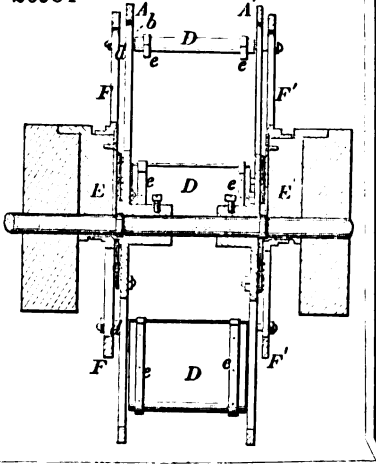

26986

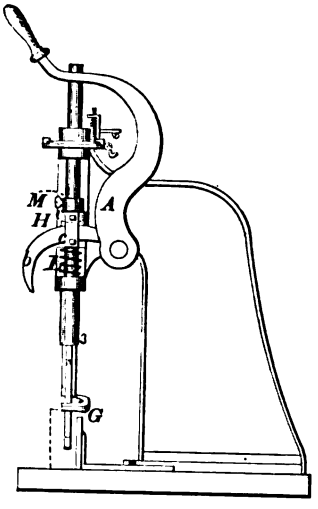

26987

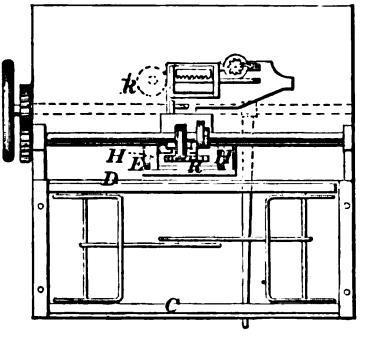

26989

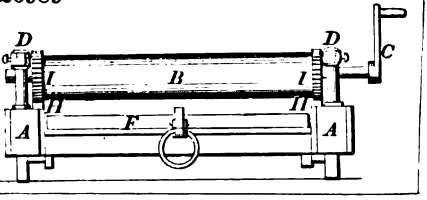

26988

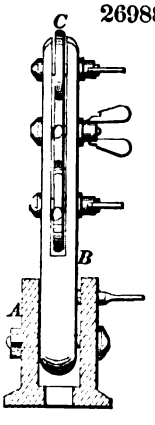

26991

Fig. 1

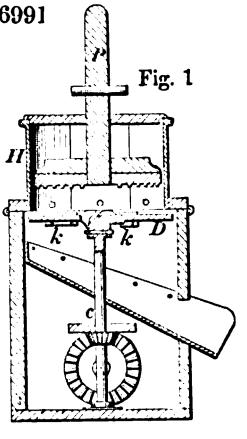

Fig. 2

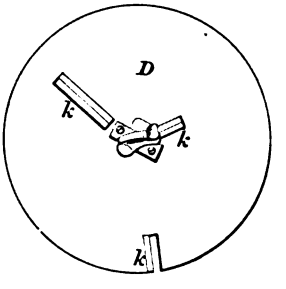

26990

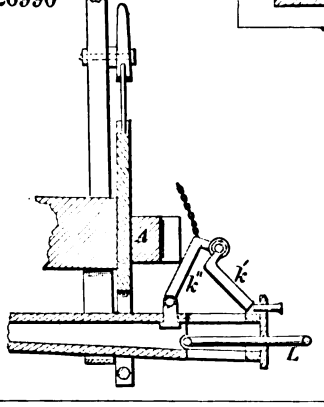

26992

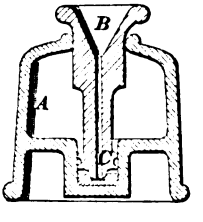

26993

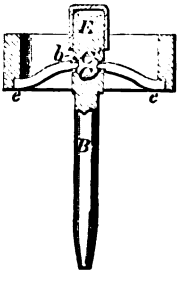

26994

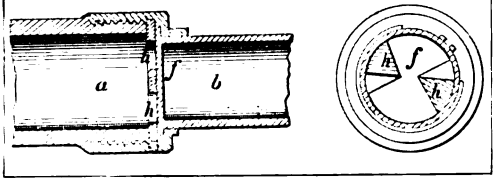

26995

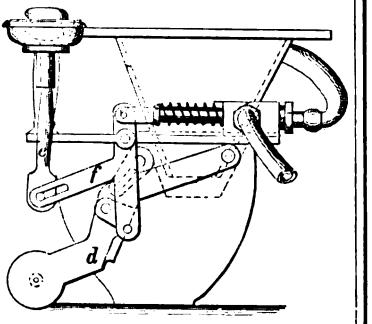

26996

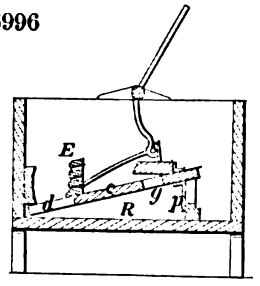

26997

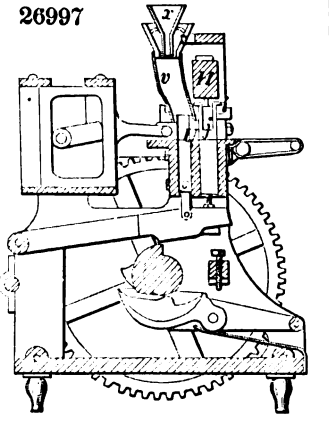

26998

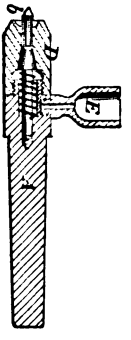

26999

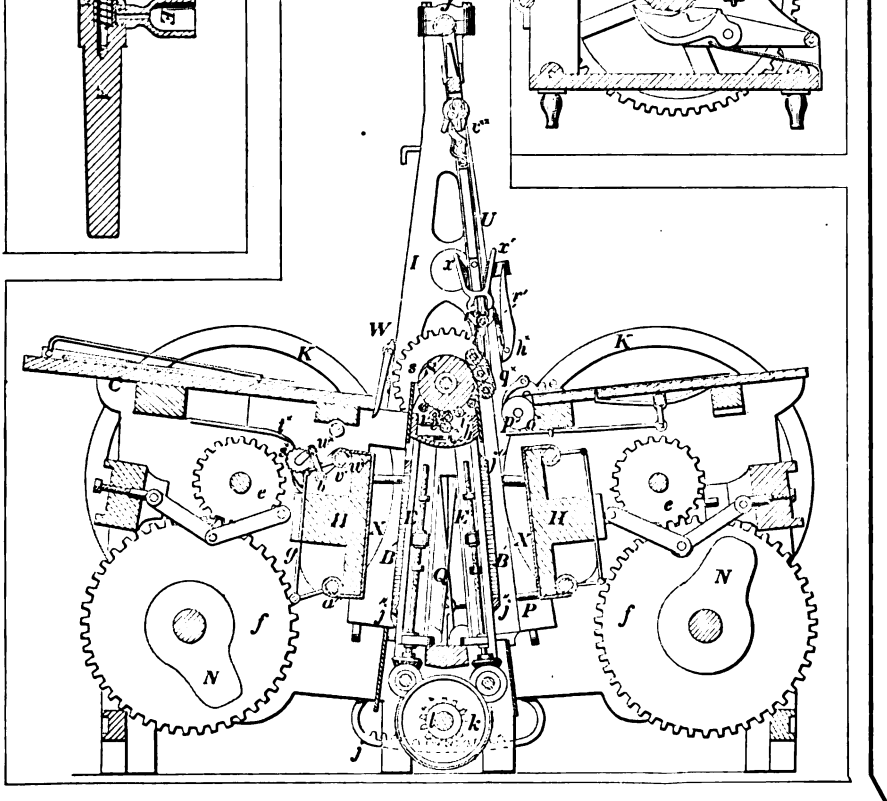

27000

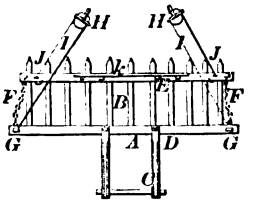

27001

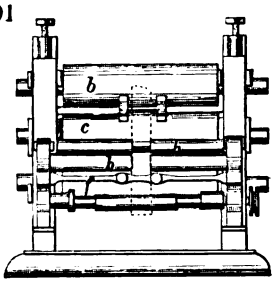

27002

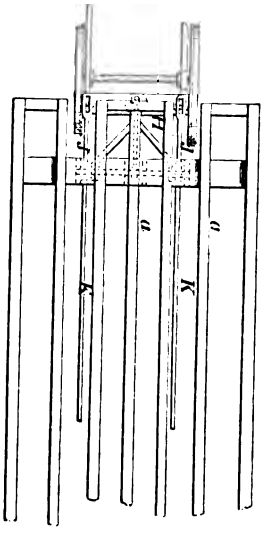

27003

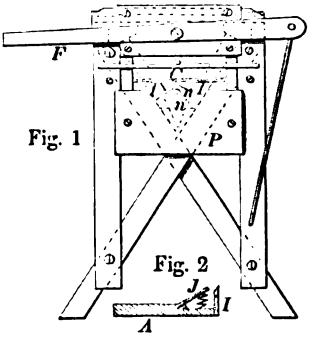

Fig. 1

Fig. 2

27004

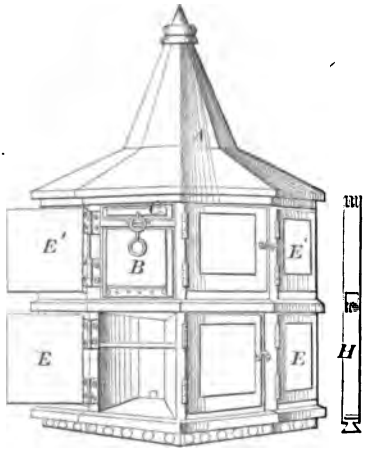

27005

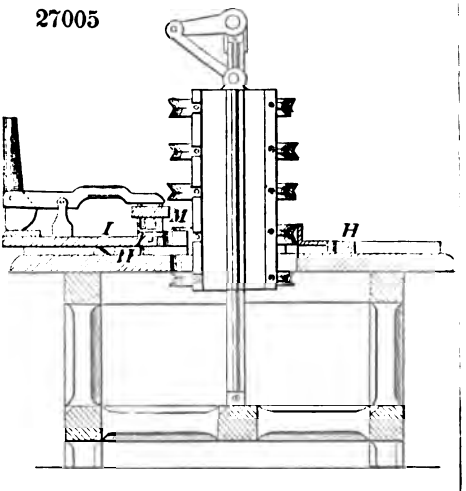

27006

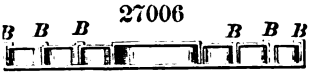

27007

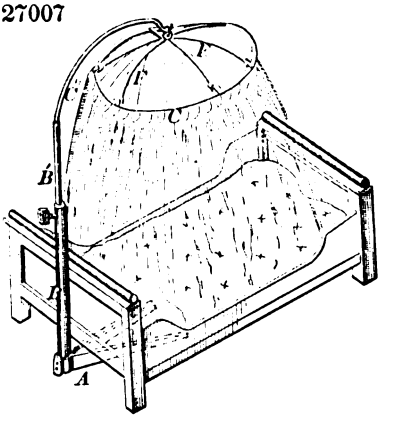

27008

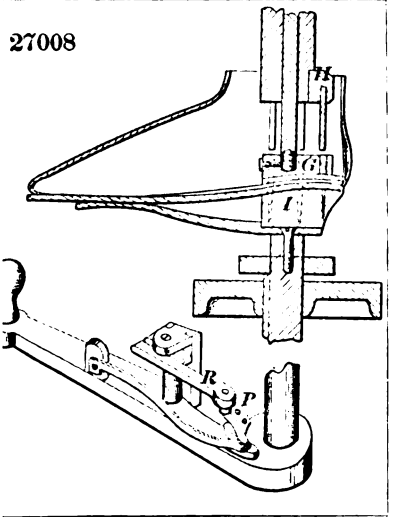

27010

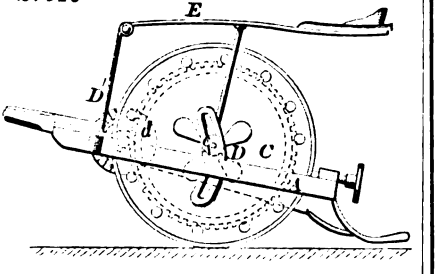

27009

Fig. 1

Fig. 2

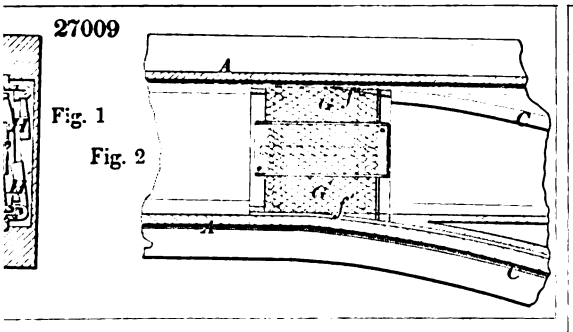

27011

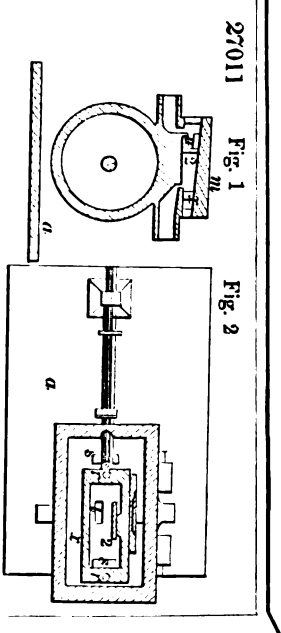

27012

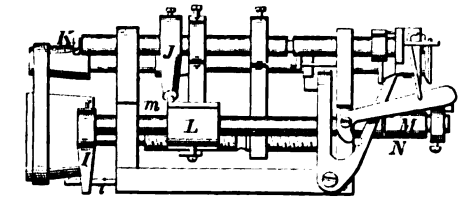

27013

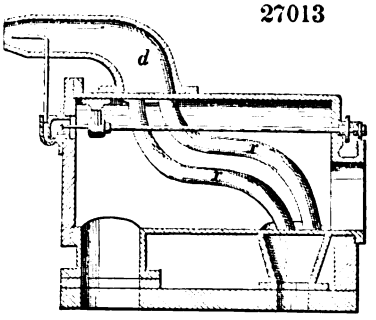

27014

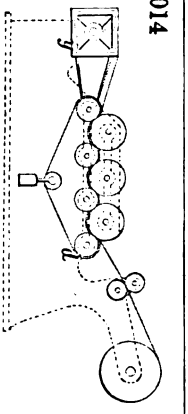

27015

27016

27017

Fig. 1

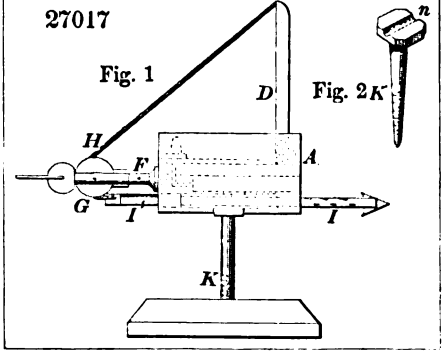

Fig. 2

27018 Fig. 1

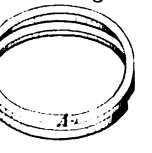

Fig. 3

Fig. 2

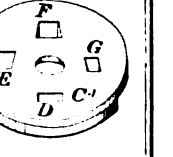

27019

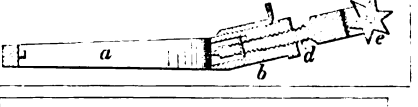

27020

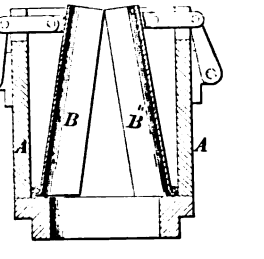

27021

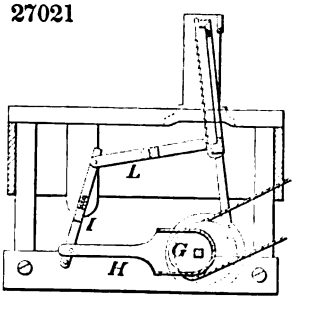

27023

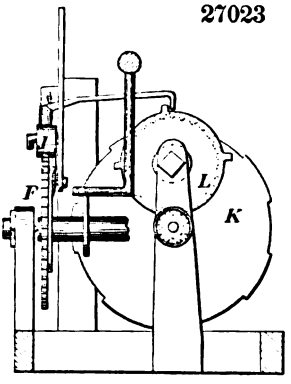

27024

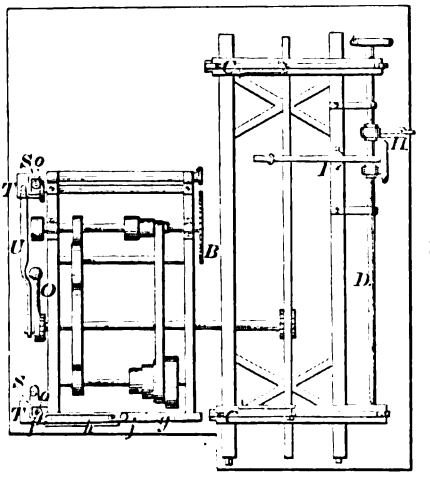

27027

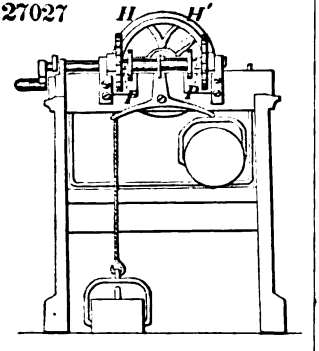

27026

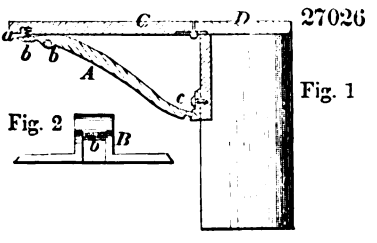

27028

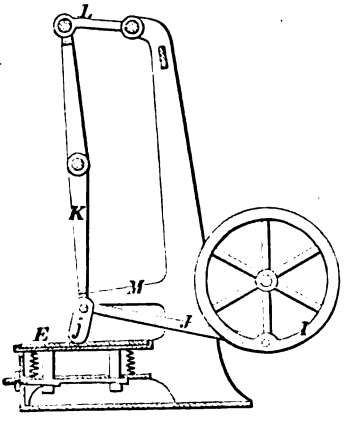

27029

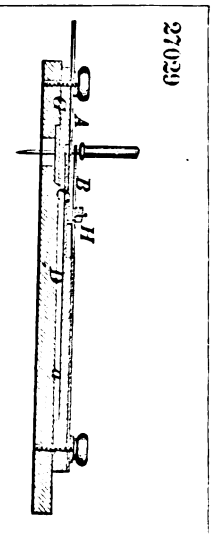

27030

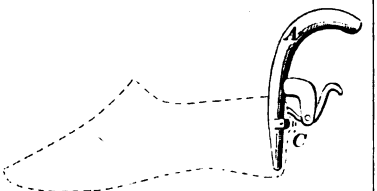

27031

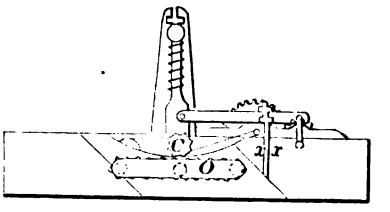

27032

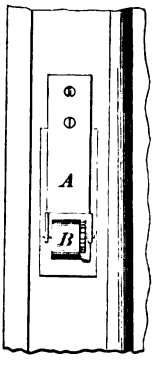

27034

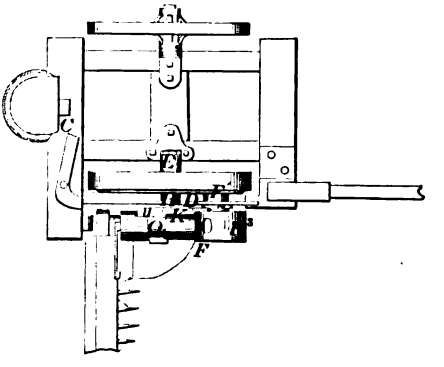

27035

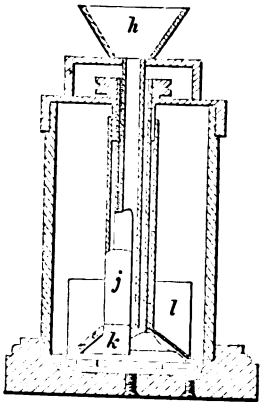

27036

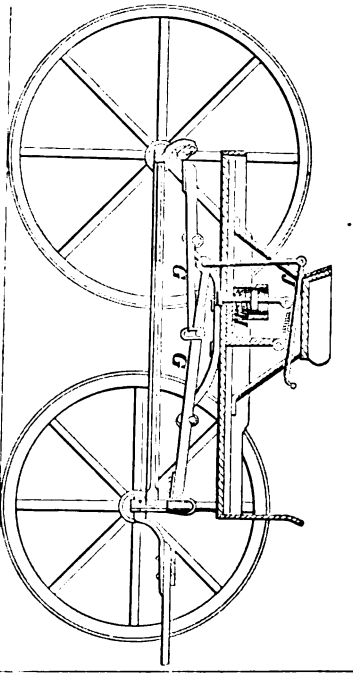

27037

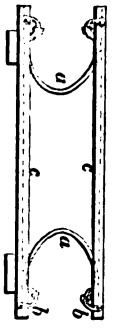

27038

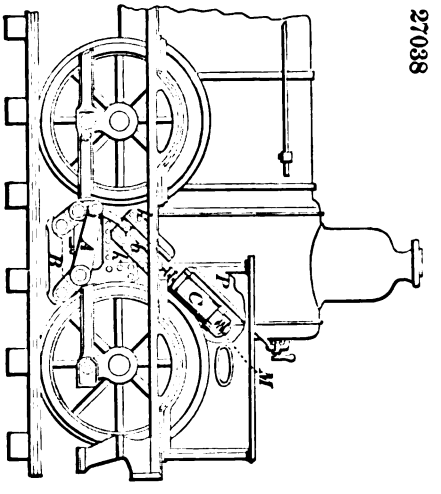

039

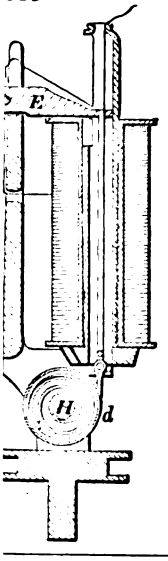

27040

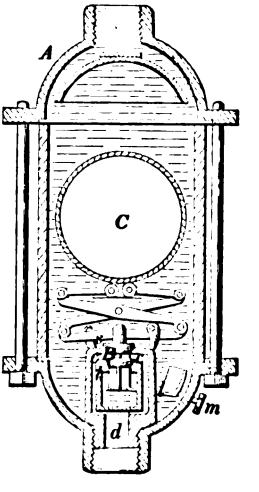

7042

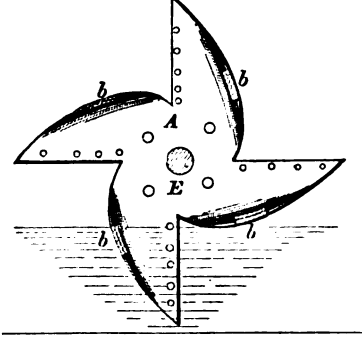

27041

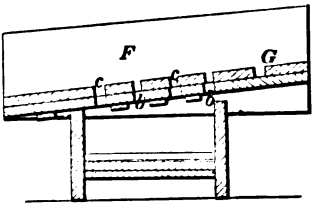

27043

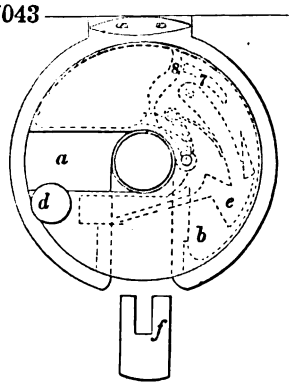

27044

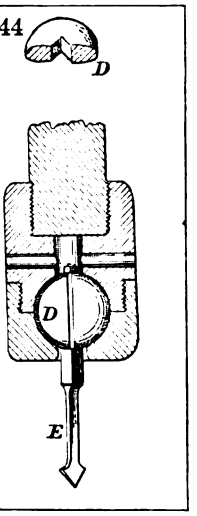

27045

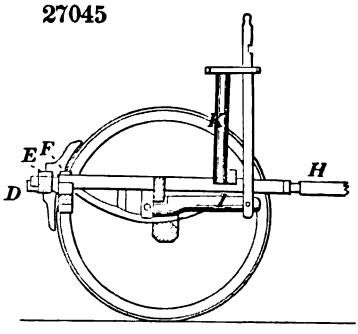

27046

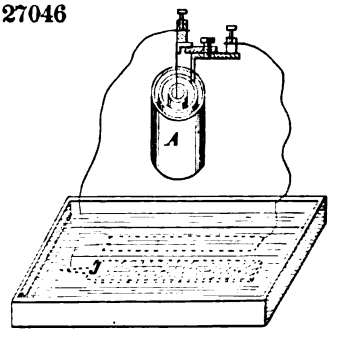

27049

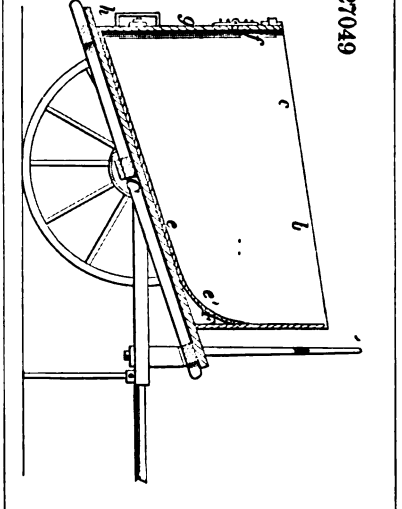

27047

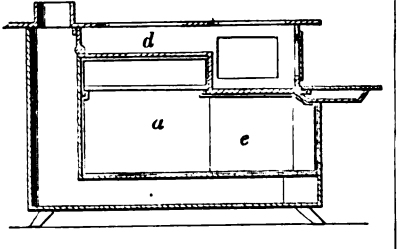

27048

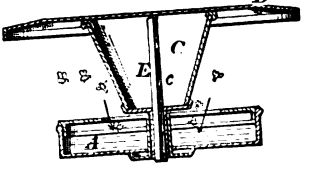

27050

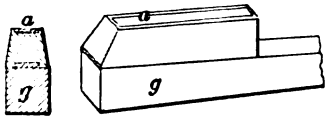

27051

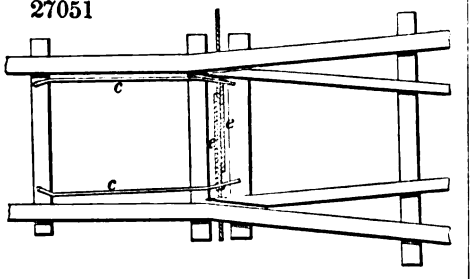

27053

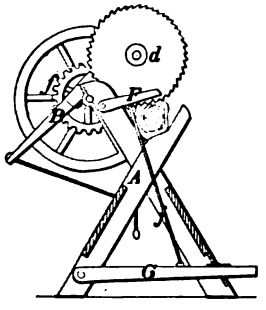

27055

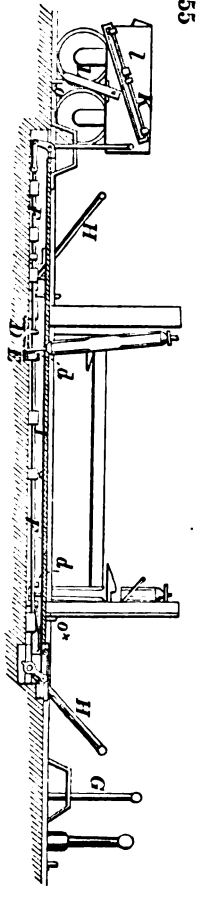

27052

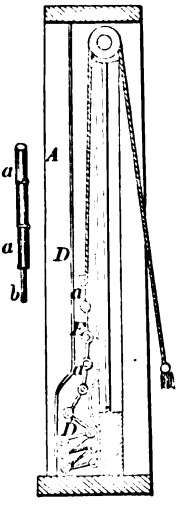

27054

Fig. 1

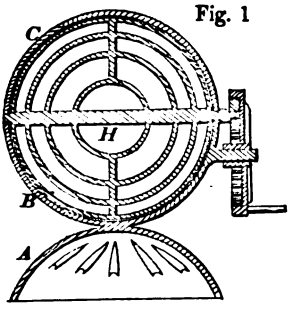

Fig. 2

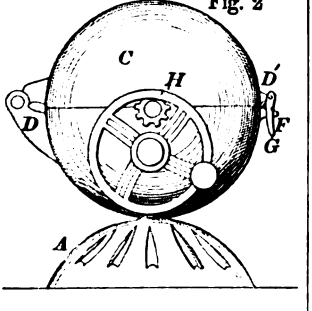

27056

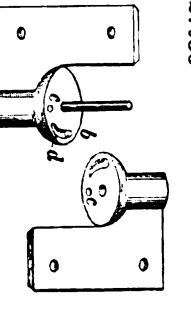

27057

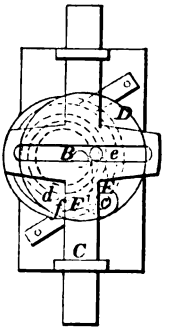

27058

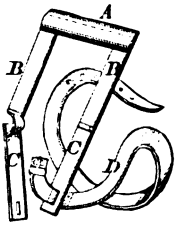

27059

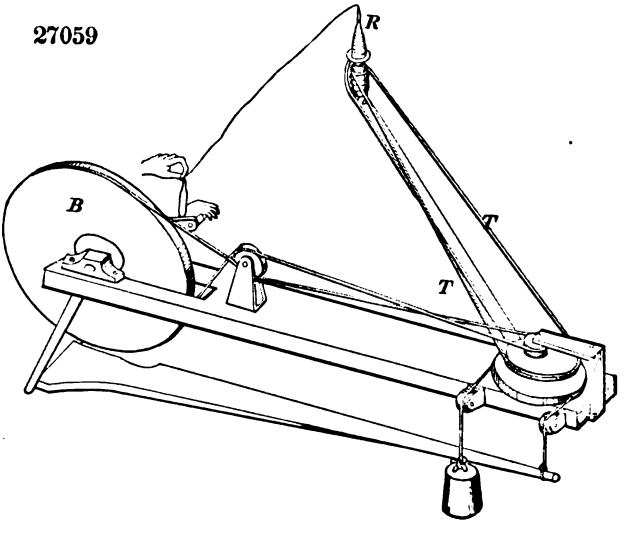

27060

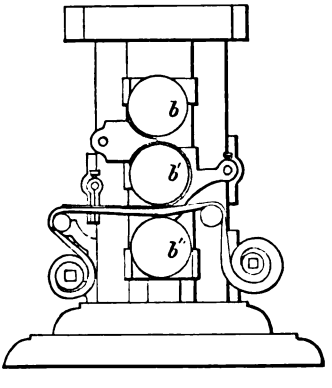

27061

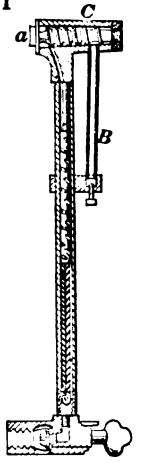

27062

Fig. 1

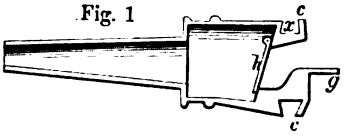

Fig. 2

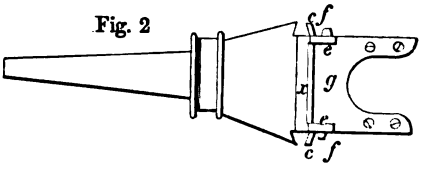

27063

27064

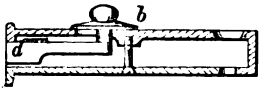

27065

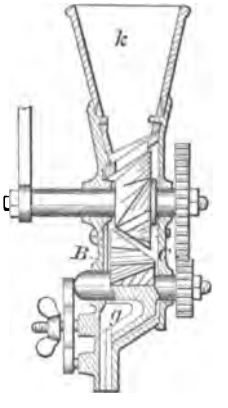

27066

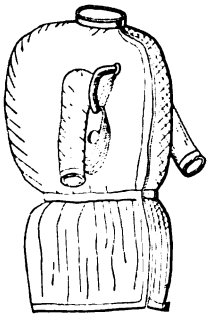

27067

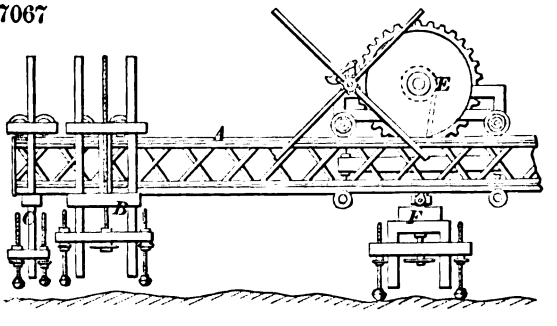

27068

Fig. 1

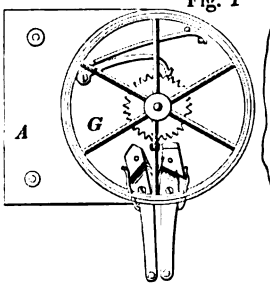

Fig. 2

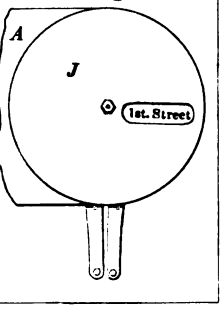

27069

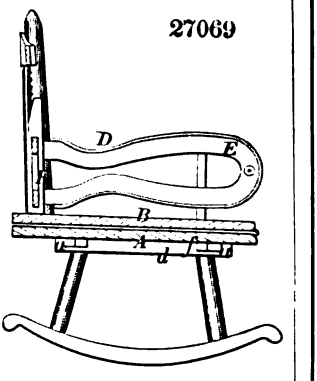

27070

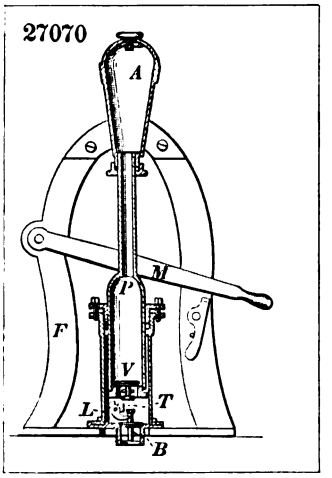

27071

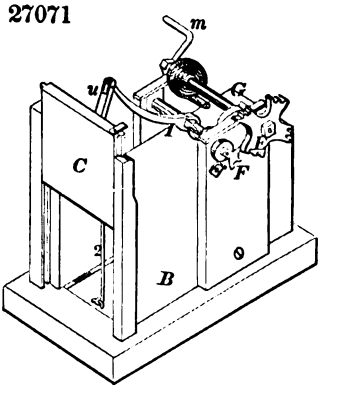

27073

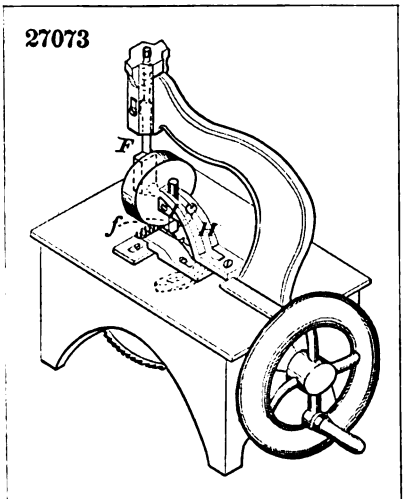

27074

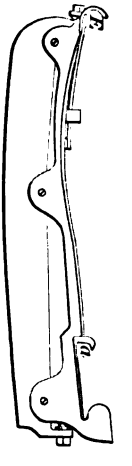

27075

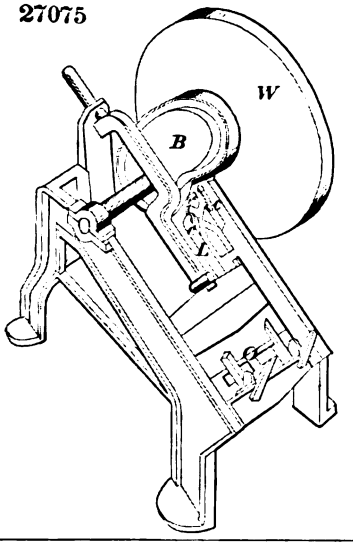

27077

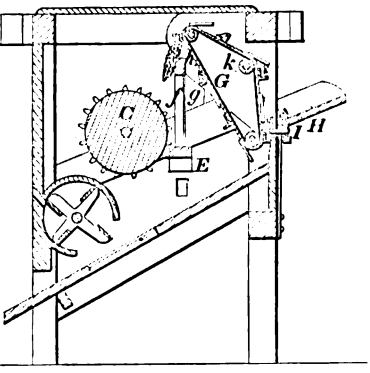

27079

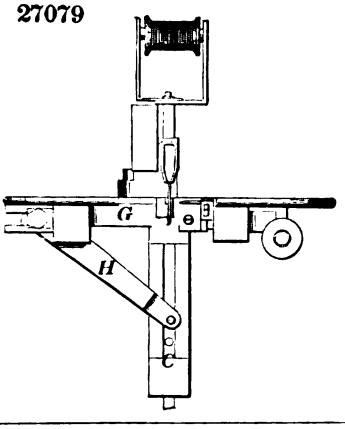

27078

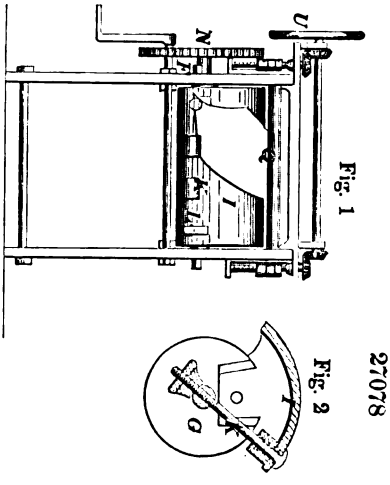

Fig. 1

Fig. 2

27080

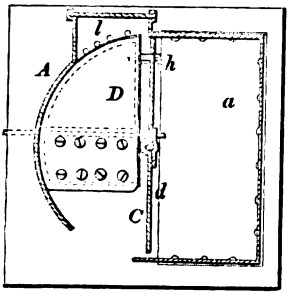

27081

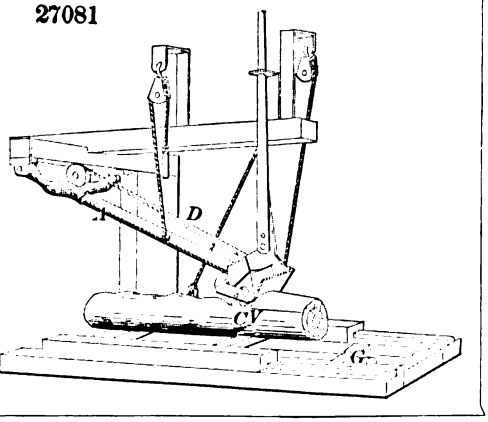

27082

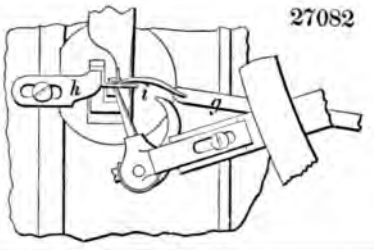

27083

Fig. 1

Fig 2

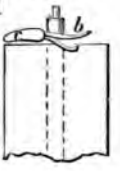

27085

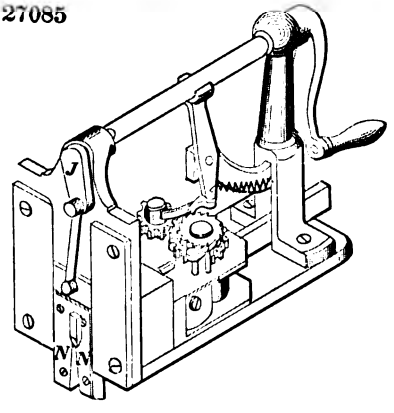

27084

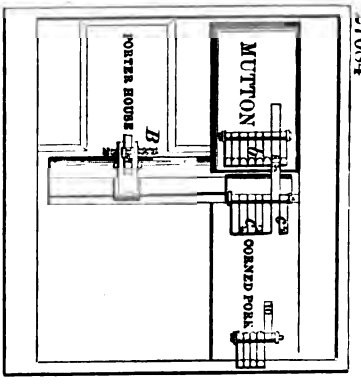

27086

27087

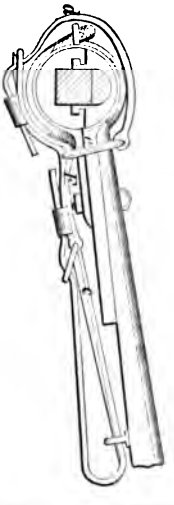

27089

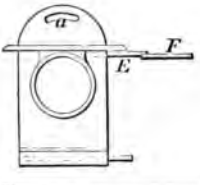

27090

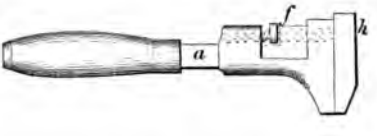

27091

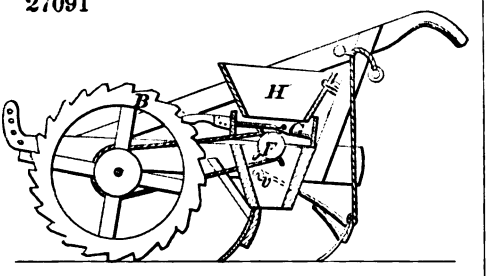

27092

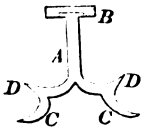

27093

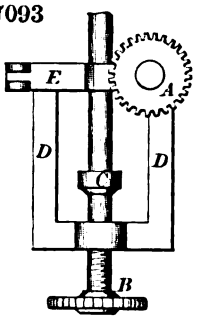

27094

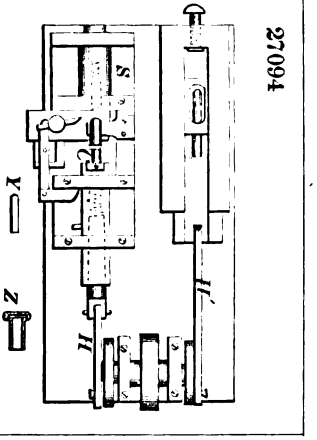

27095

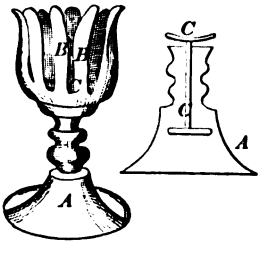

27096

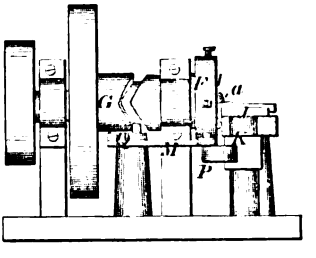

27097

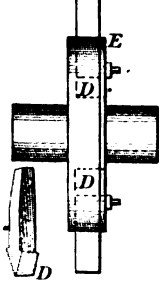

27098

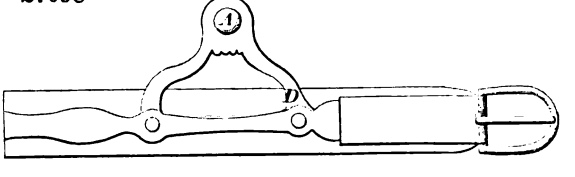

27099

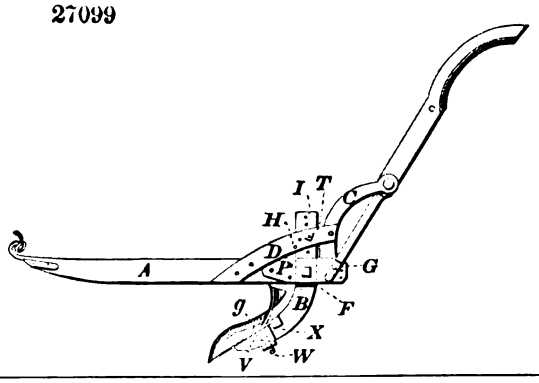

27100

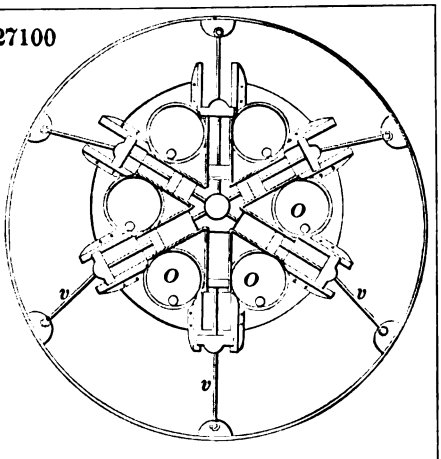

27101

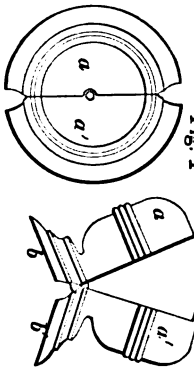

27102

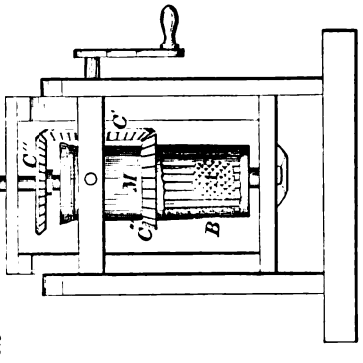

27103

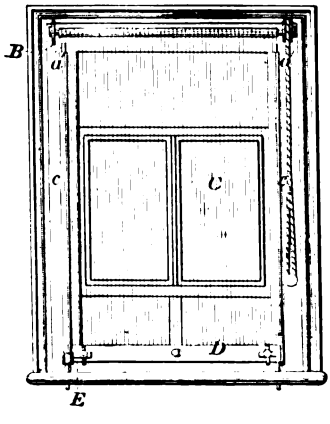

27104

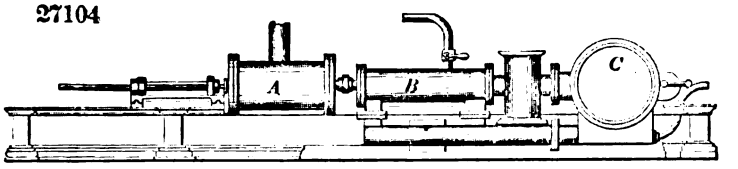

27105

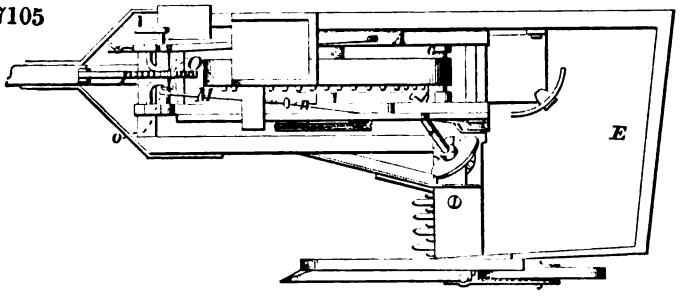

27106

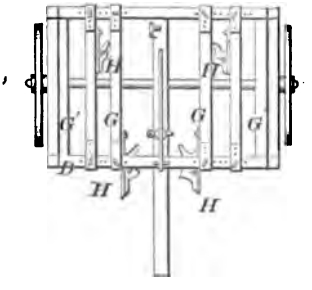

27107

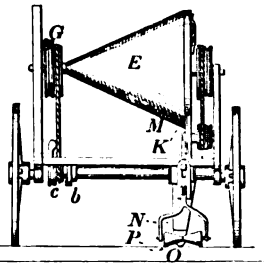

27108

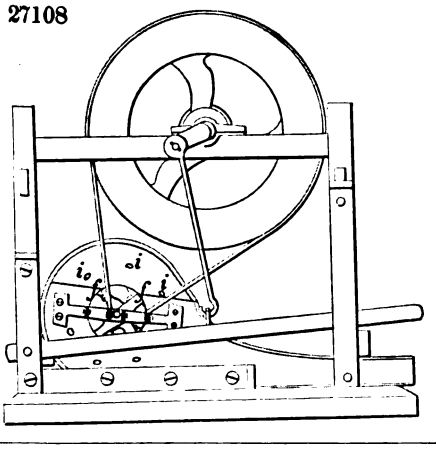

27109

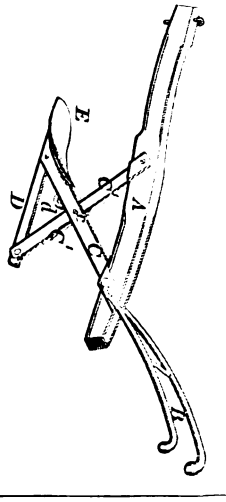

27110

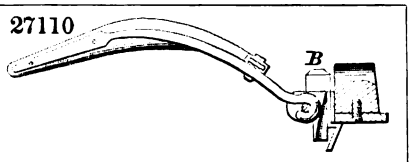

27111

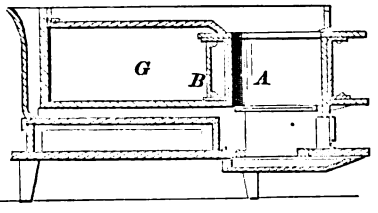

27112

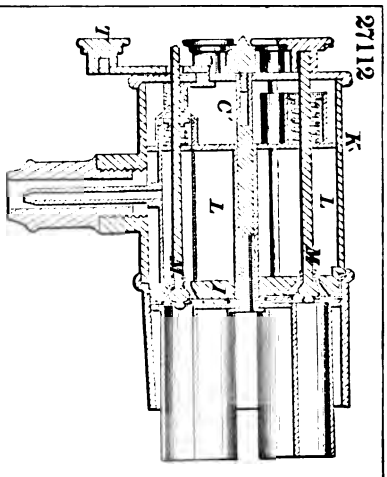

27114

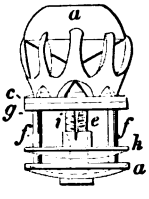

27115

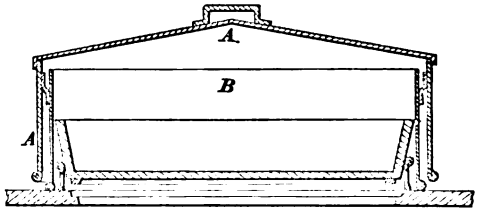

27113

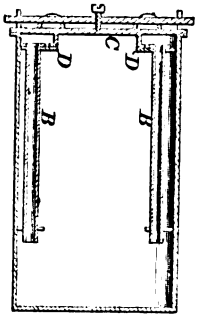

27117

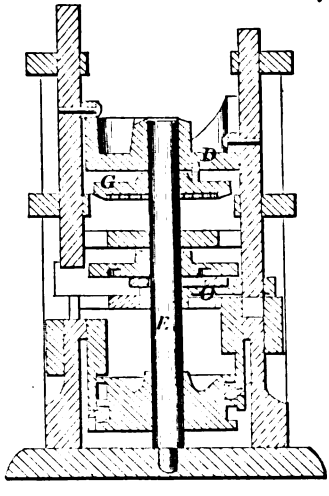

27118

Fig. 1

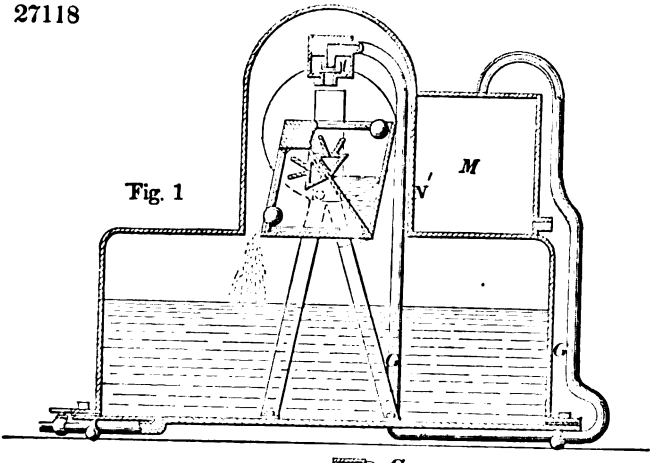

Fig 2

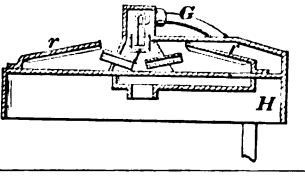

27119

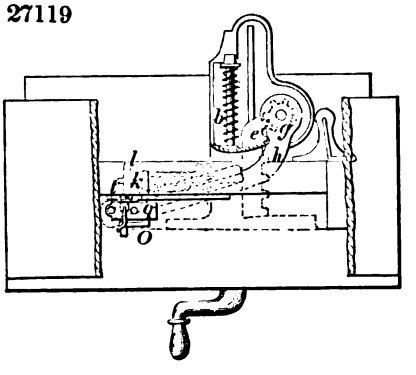

27120

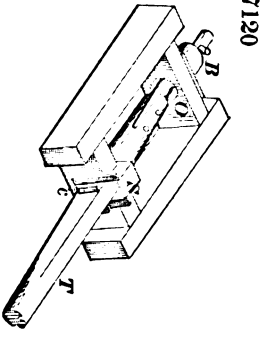

27121

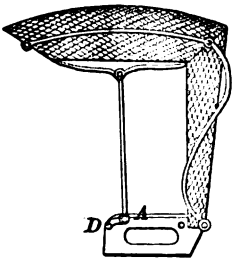

27122

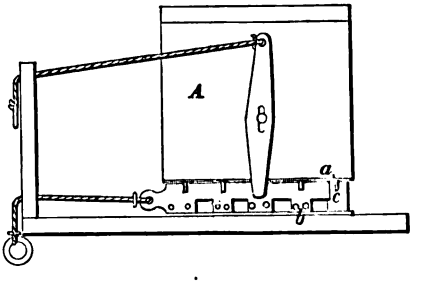

27123

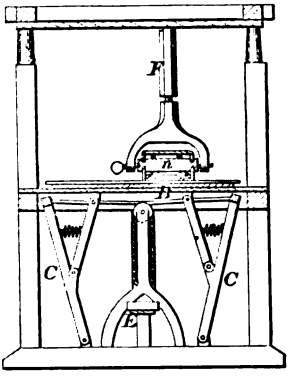

27124

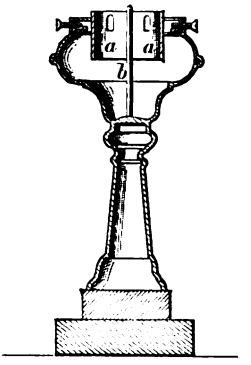

27125

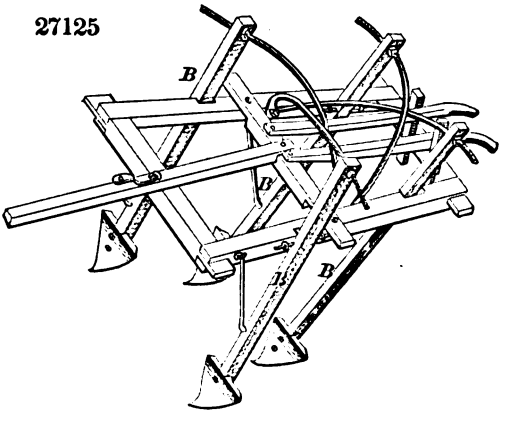

27126

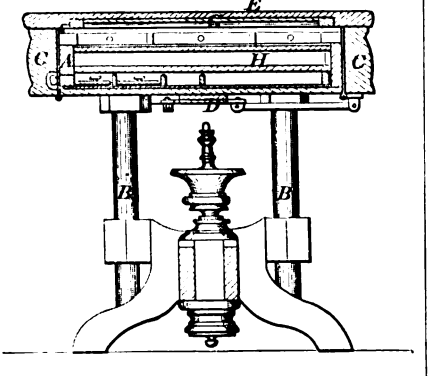

27127

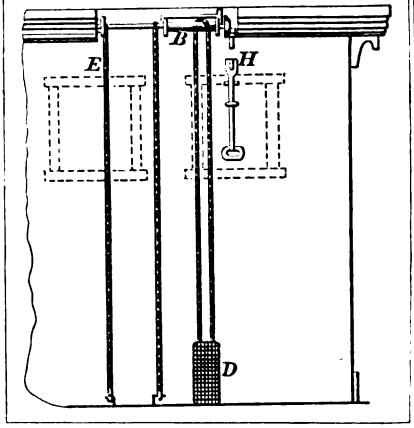

27128

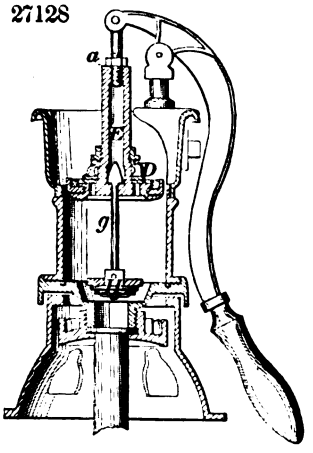

27129

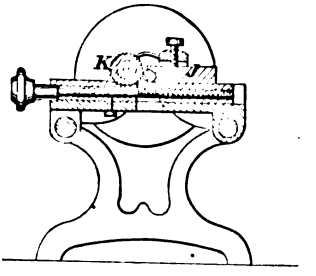

27131

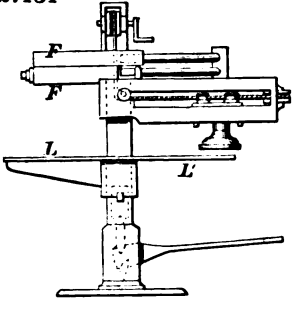

27132

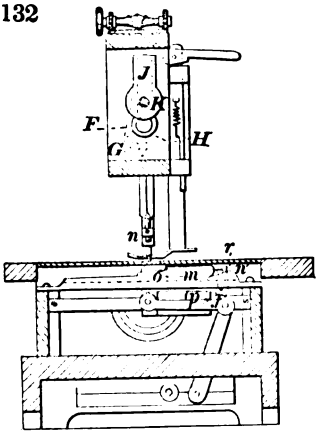

27133

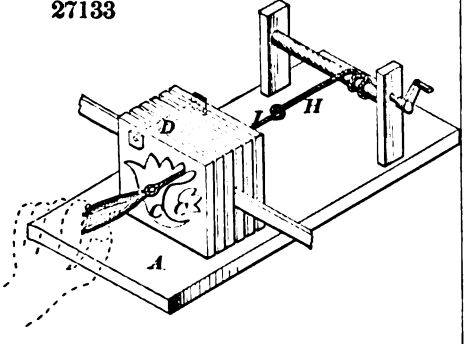

27134

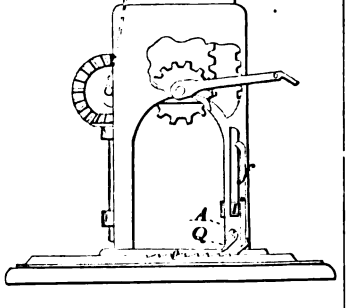

27135

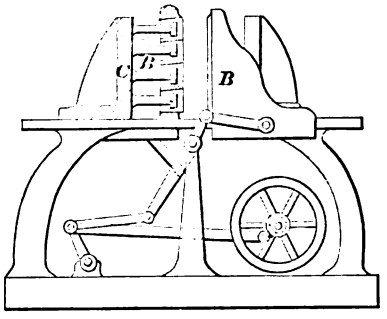

27136

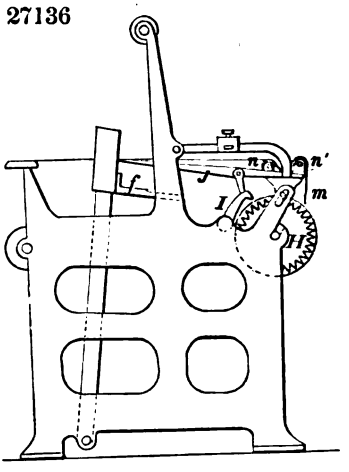

27137

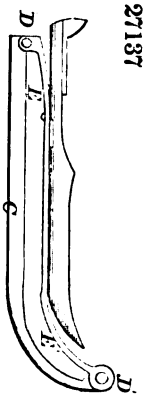

27138

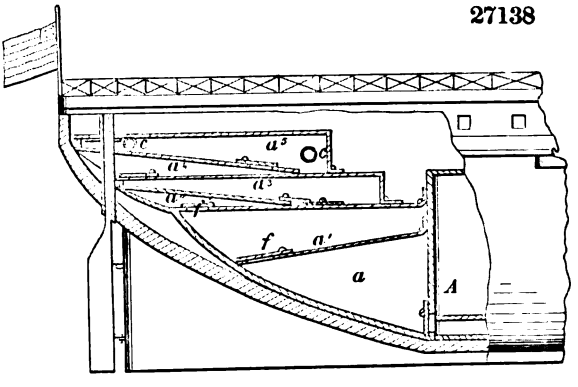

27139

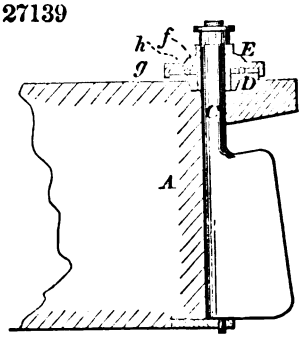

27140

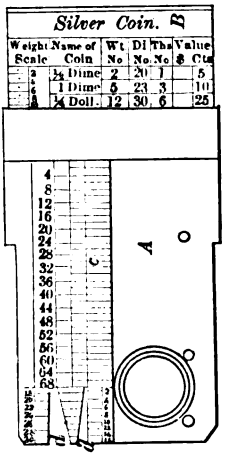

27141

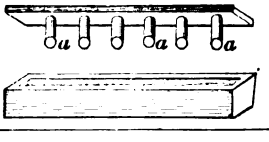

27142

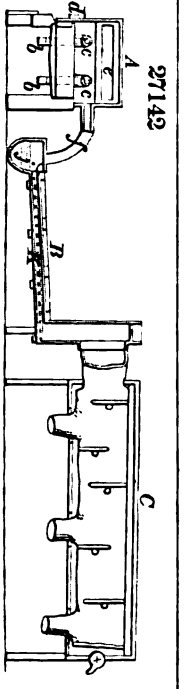

27143

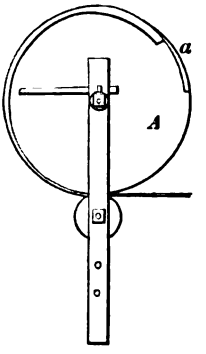

27144

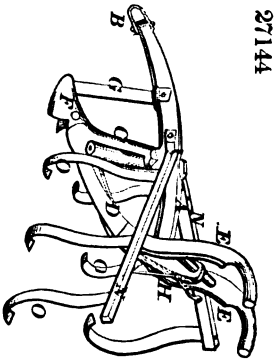

27145

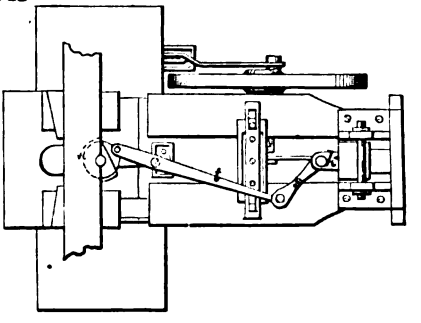

27146

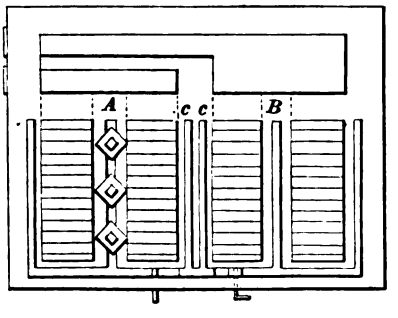

27148

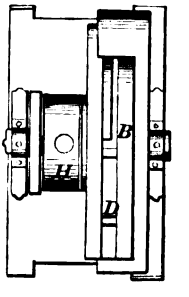

27147

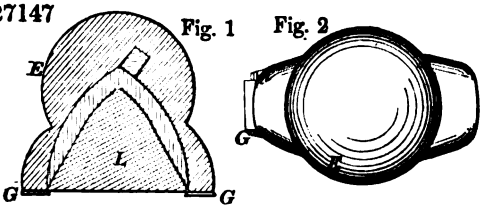

27149

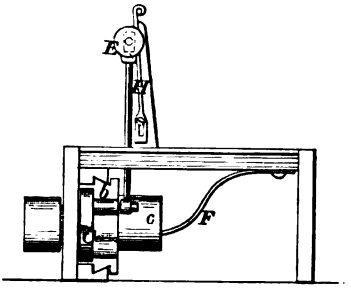

27150

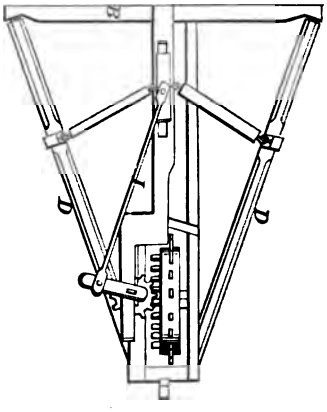

27151

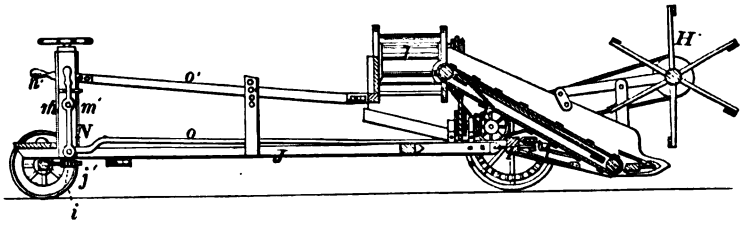

27152

B

Trains Leave					Station				
Going East					Going West				
N. Exp	7	4	0	A.M.	D. Exp	6	5	5	A.M.
Way	8	4	5	A.M.	ACCM.	8	2	0	A.M.
Mail	10	2	5	A.M.	Expr.	9	5	0	A.M.
Freight	2	3	0	P.M.	Mail	1	1	0	P.M.
Expr.	4	0	0	P.M.	Freight	3	0	5	P.M.
ACCM.	5	1	5	P.M.	Way	5	4	5	P.M.
D. Exp	6	3	5	P.M.	N. Exp	8	0	0	P.M.

27153

Fig. 1 Fig. 2

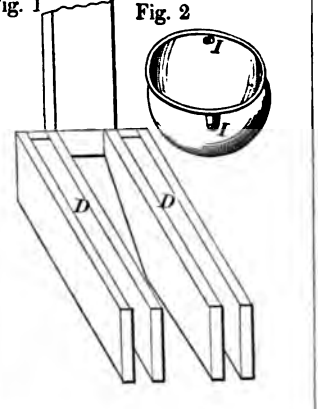

27154

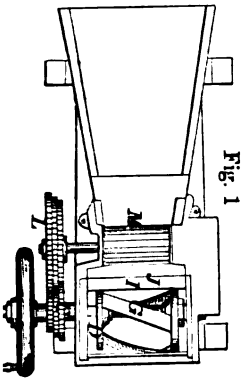

Fig. 1

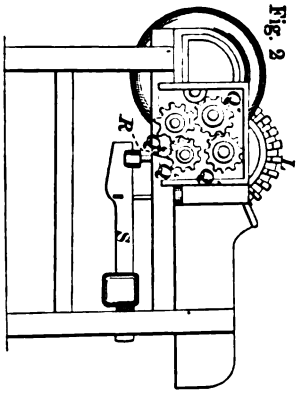

Fig. 2

27155

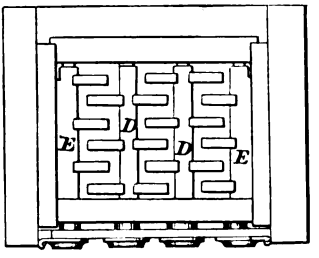

27156

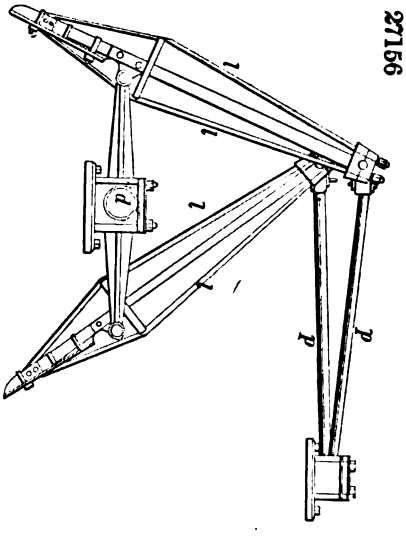

27157

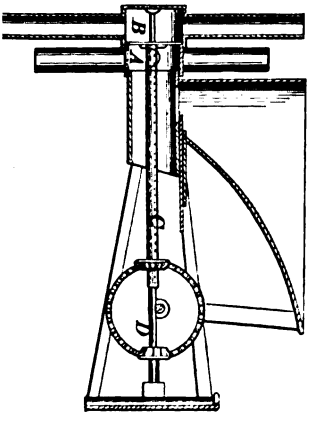

27158

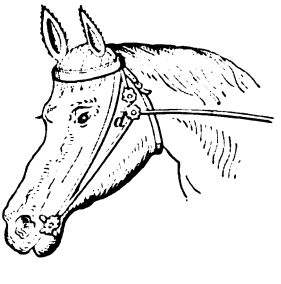

27159

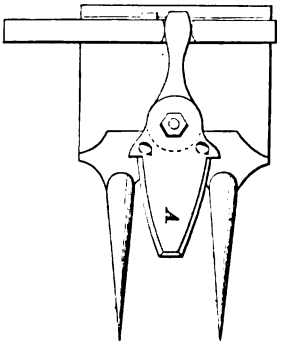

27160

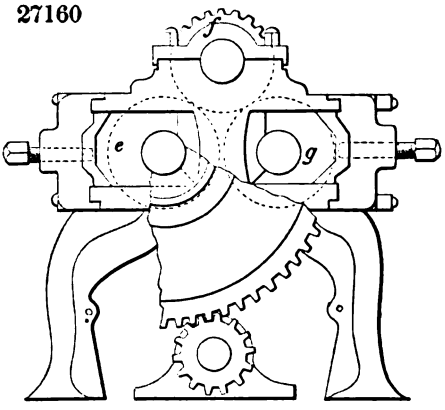

27161

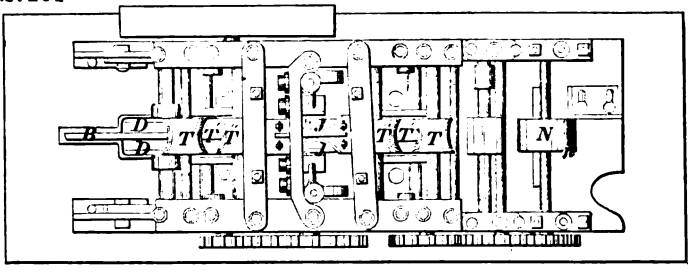

27162

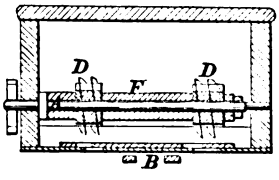

27163

27164

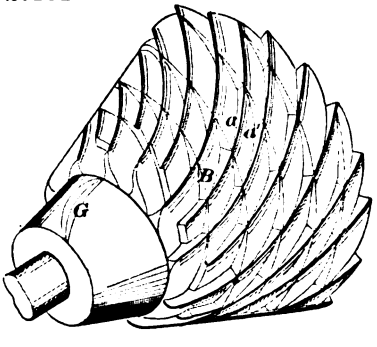

27165

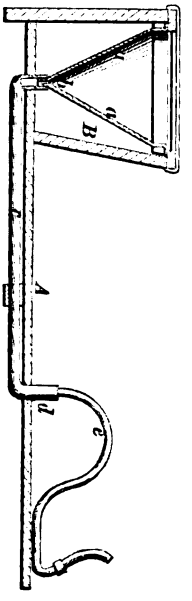

27167

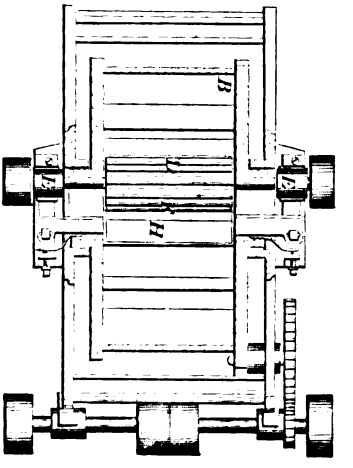

27166

Fig. 1

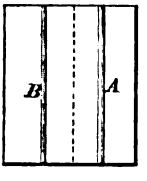

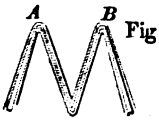

Fig 2

27168

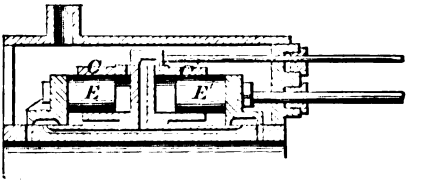

27169

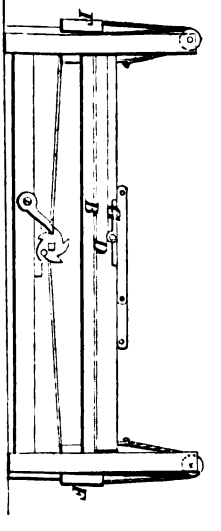

27170

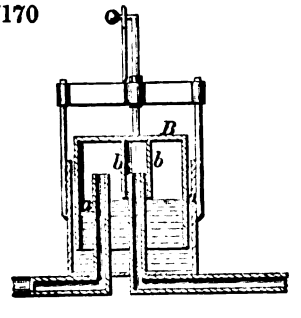

27171

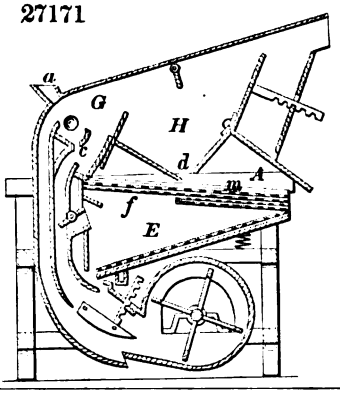

27172

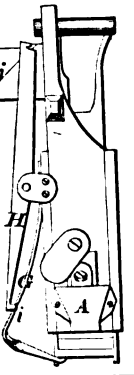

27173

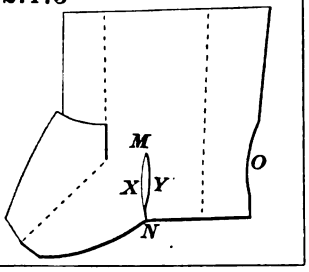

27174

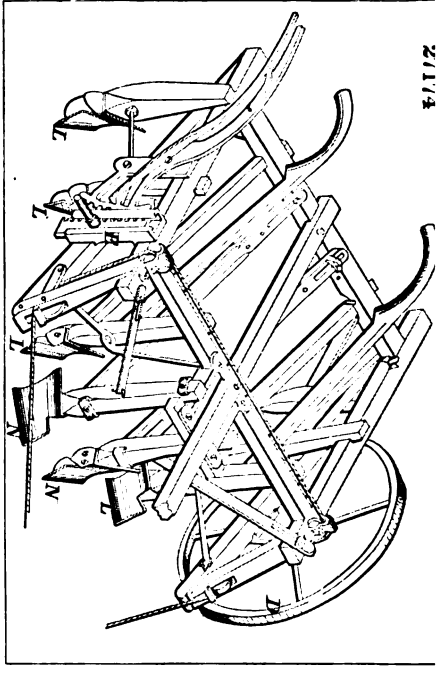

27176

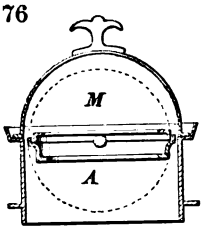

27175

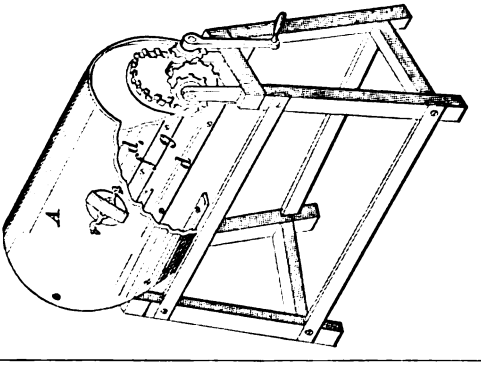

27178

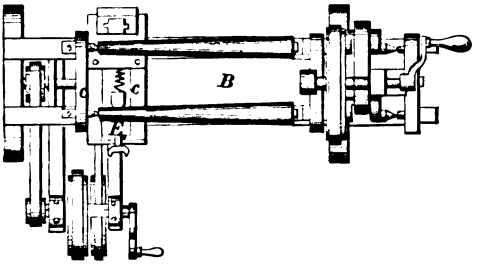

27179

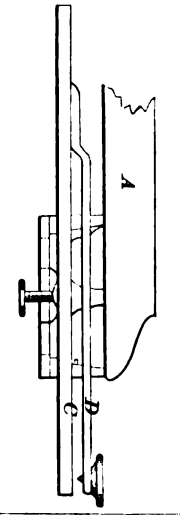

27180

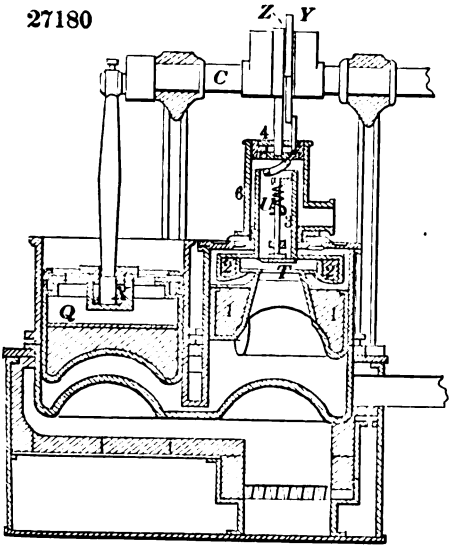

27181

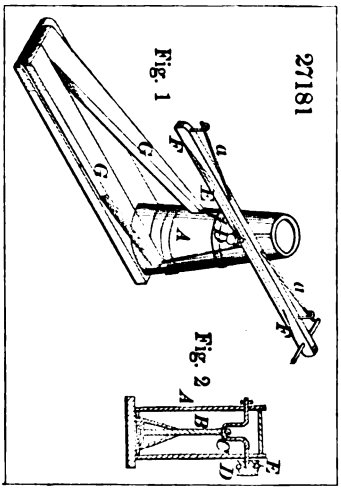

27182

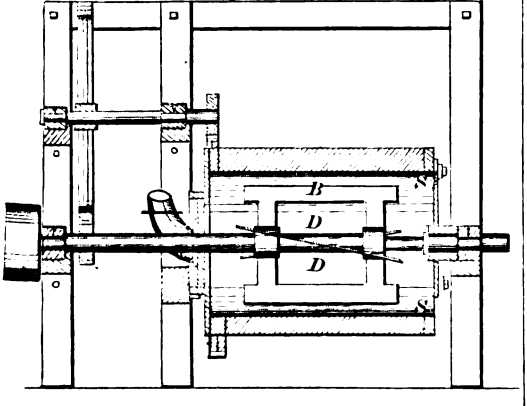

27183

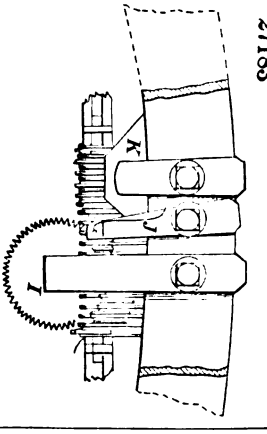

27184

Fig. 1

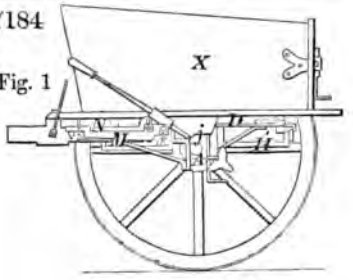

Fig. 2

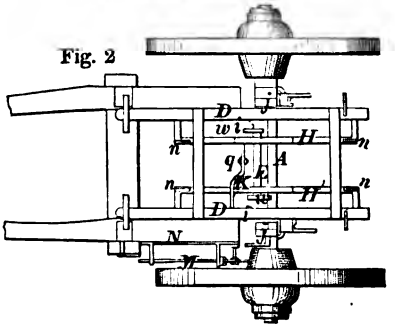

27185

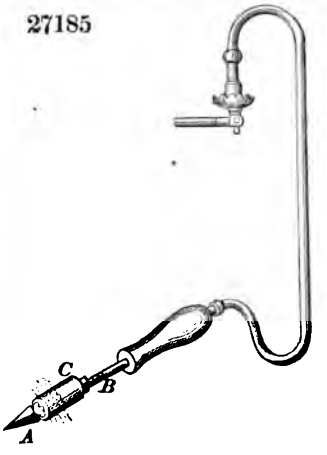

27186

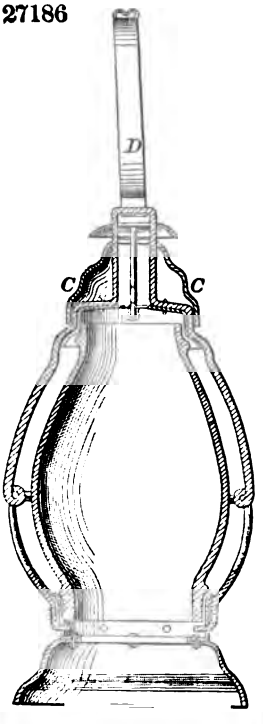

27187

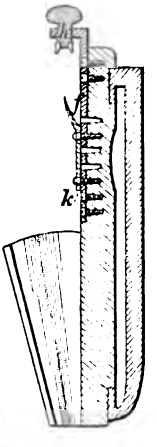

27188

Fig. 1

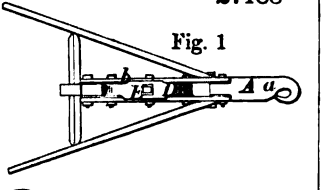

Fig. 2

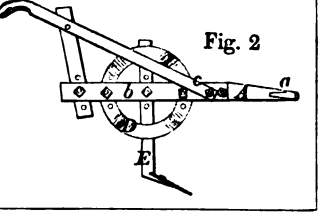

27189

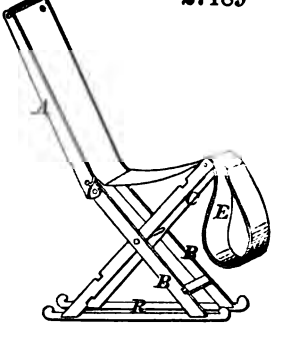

27190

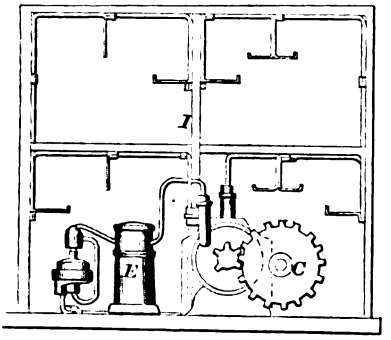

27191

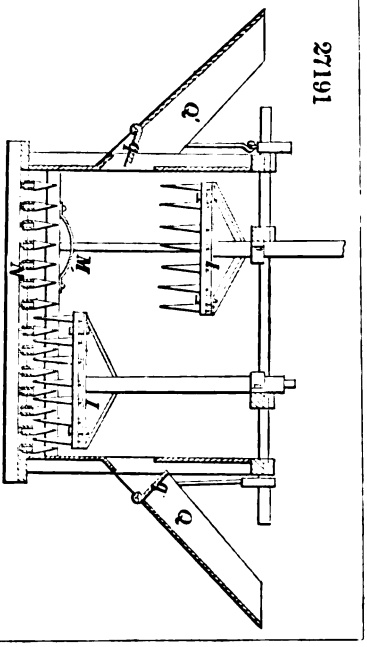

27192

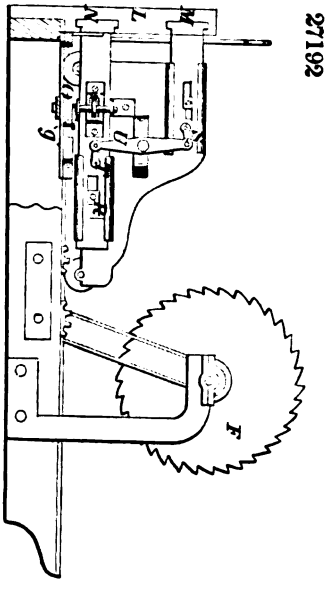

27193

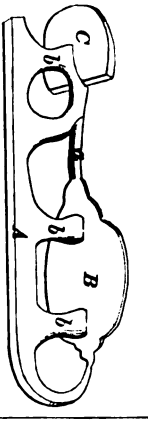

27194

27195

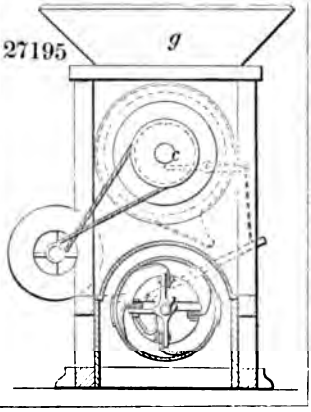

27196

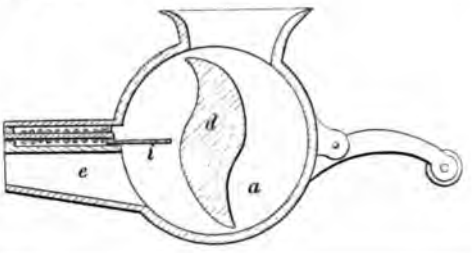

27197

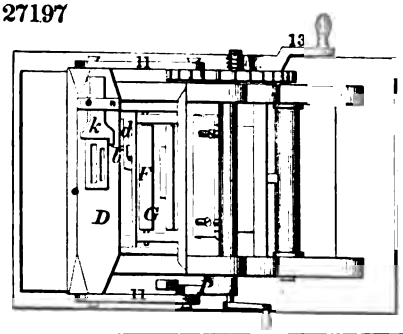

27198

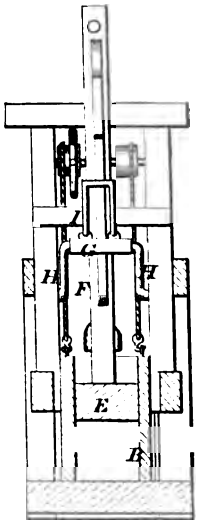

27199

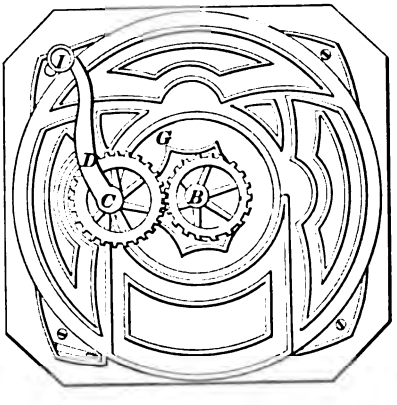

27200

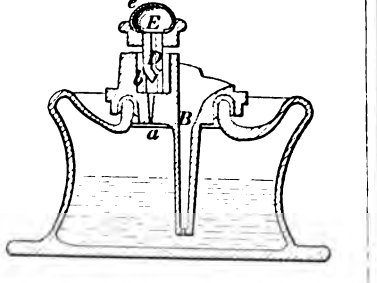

27201

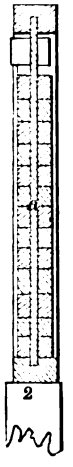

27202

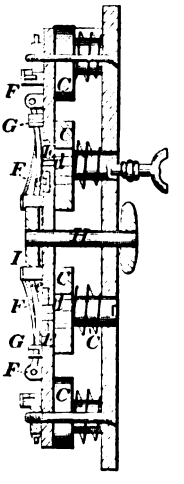

27203

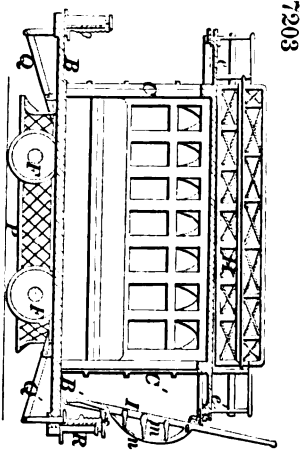

27204

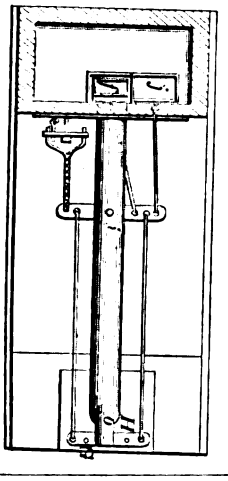

27205

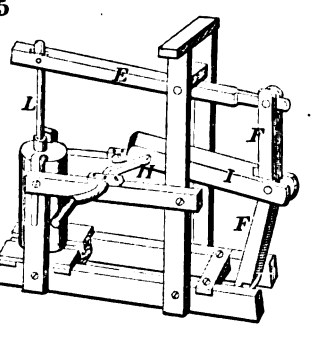

27206

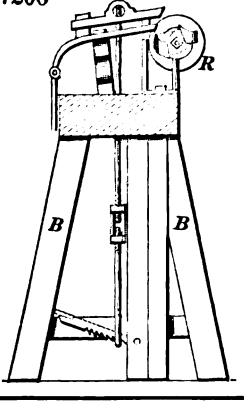

27207

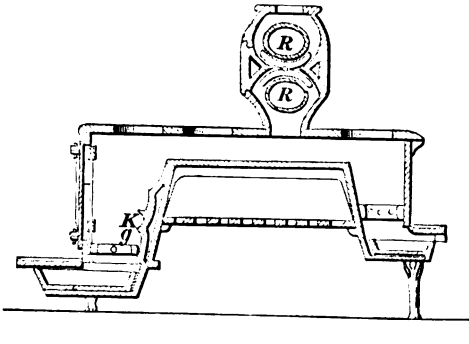

27208

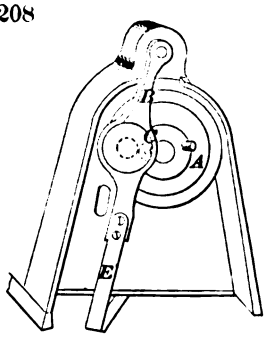

27209

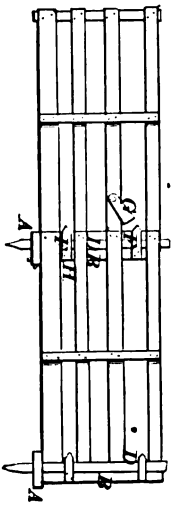

27210

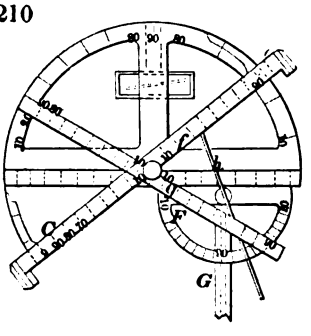

27211

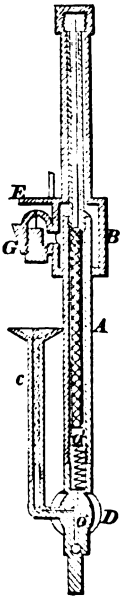

27212

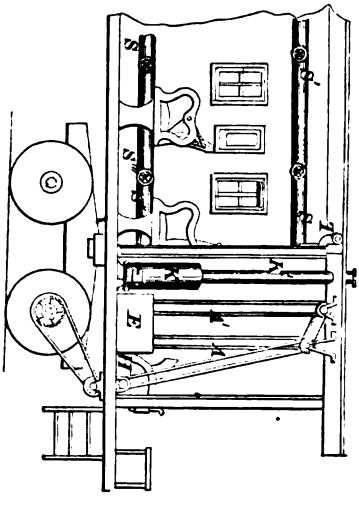

27213

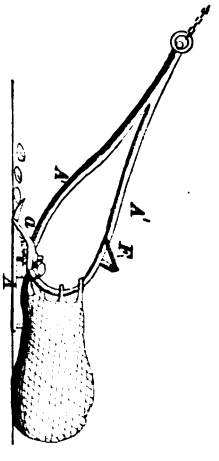

27214

Fig. 1

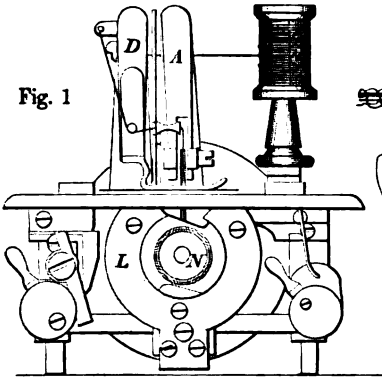

Fig. 2

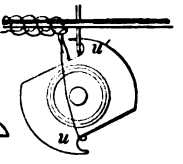

27215

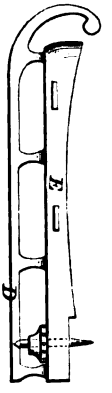

27216

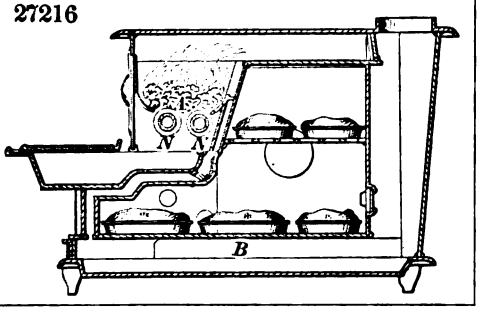

27217

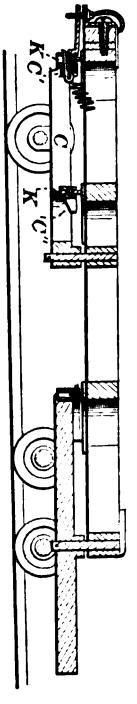

27218

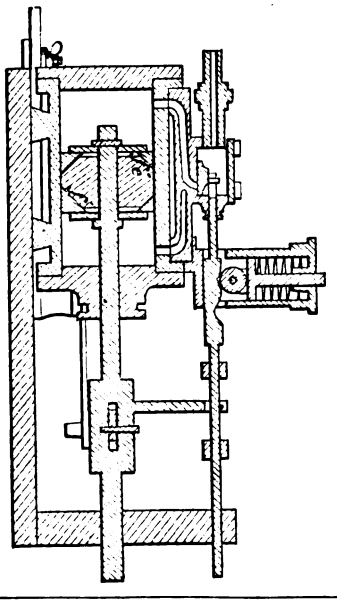

27219

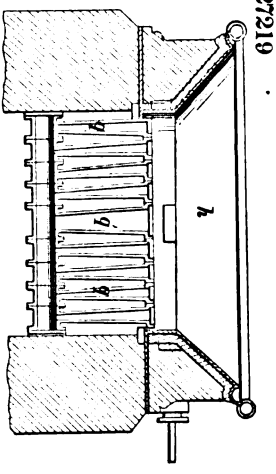

27220

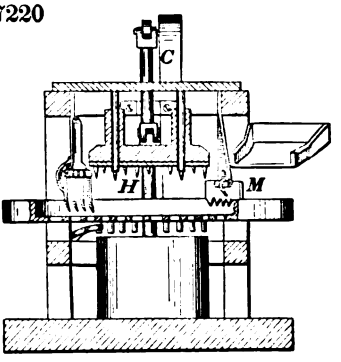

27221

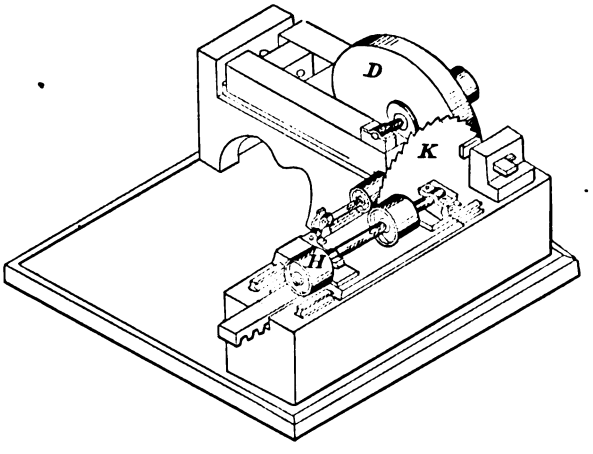

27222

27223

Fig. 1

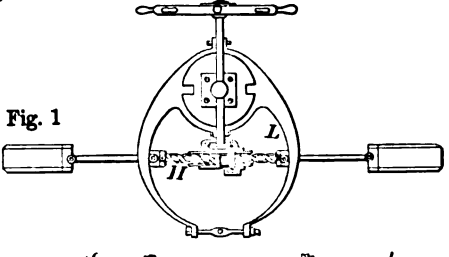

Fig. 2

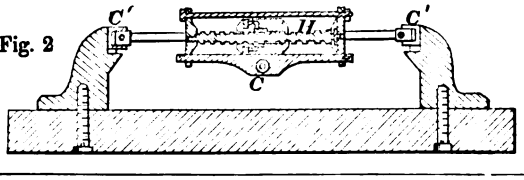

224

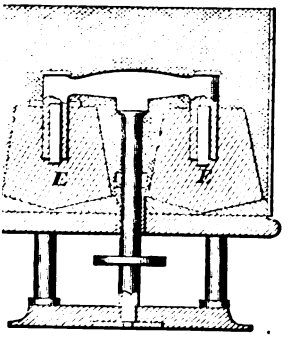

27225

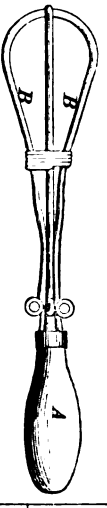

27226

d
e

27228

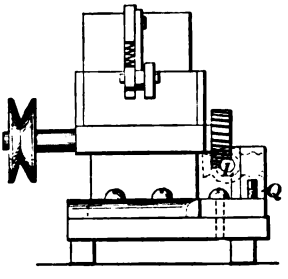

27229

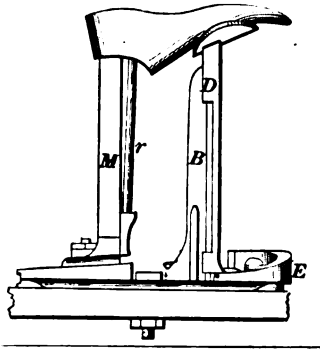

30

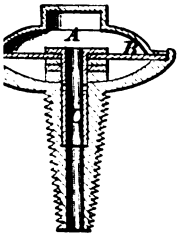

27231

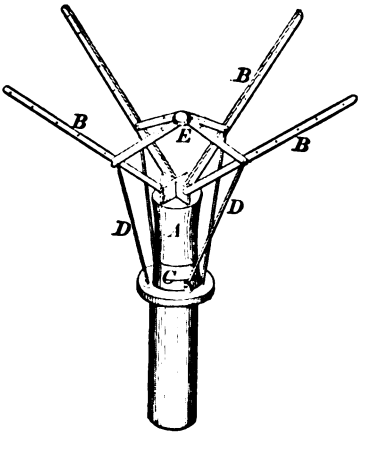

27232

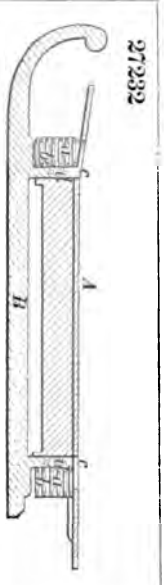

27233

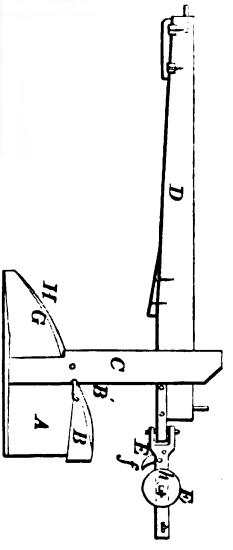

27234

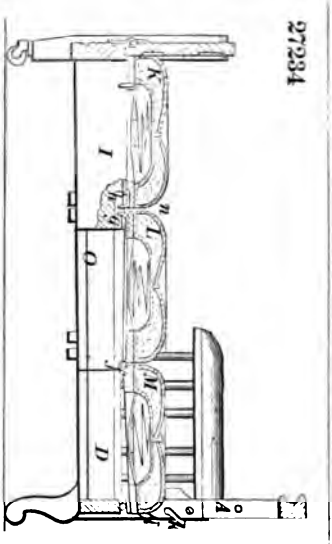

27235

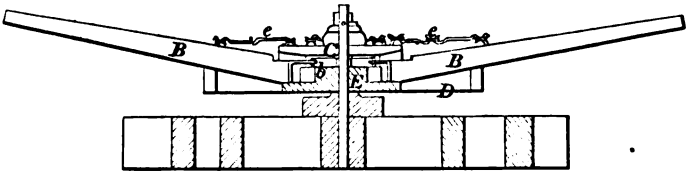

27236

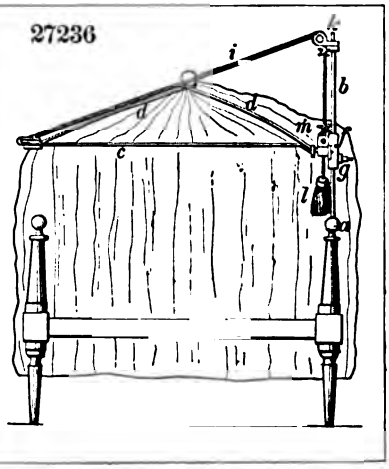

27237

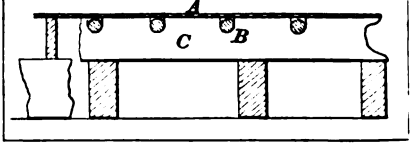

27238

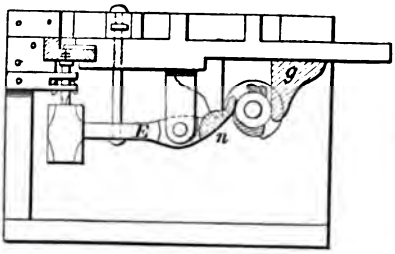

27239

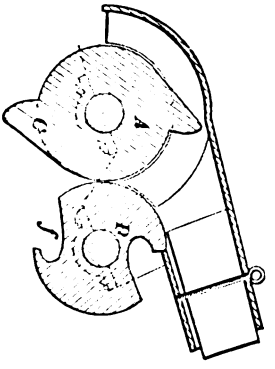

27240

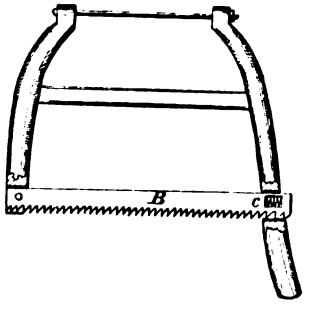

27241

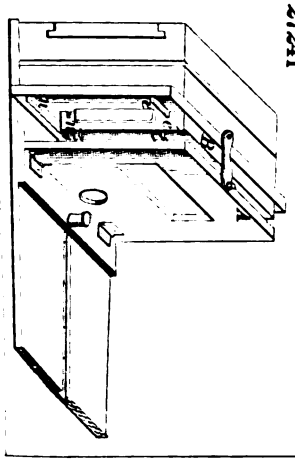

27242

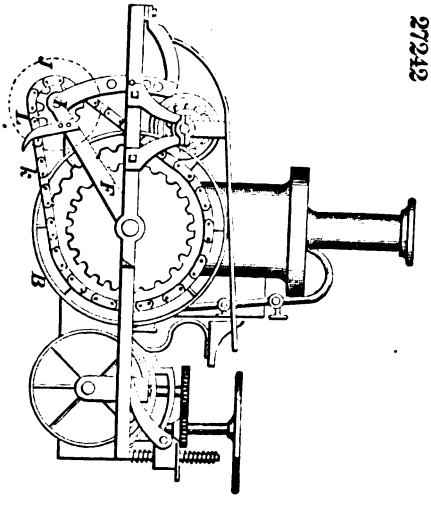

27243

Fig. 1

Fig. 2

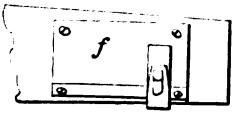

27244

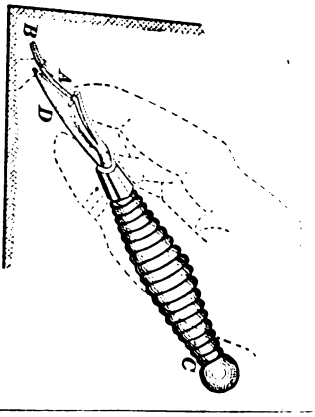

27245

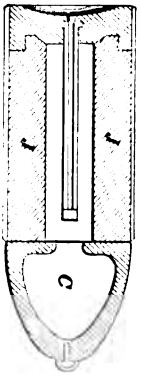

27246

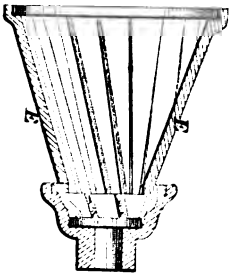

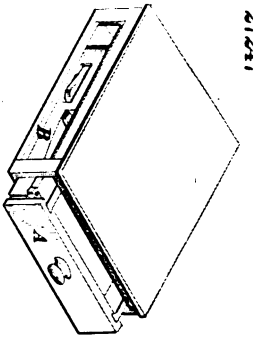

27248

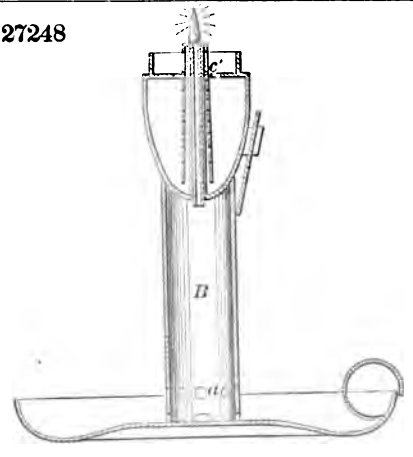

27249

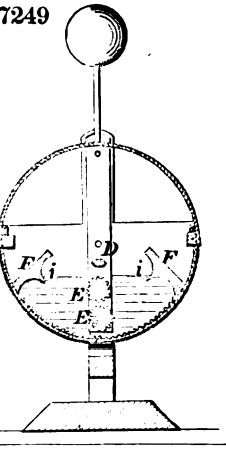

27250

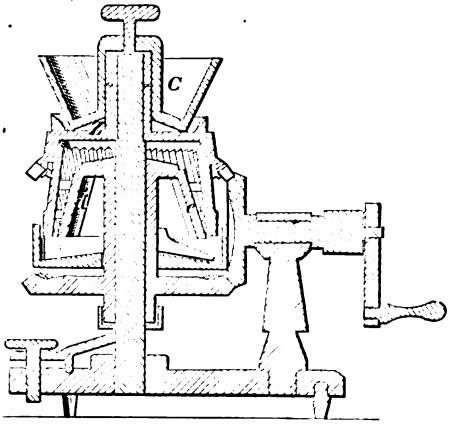

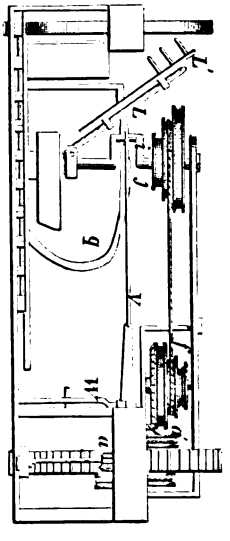

27253

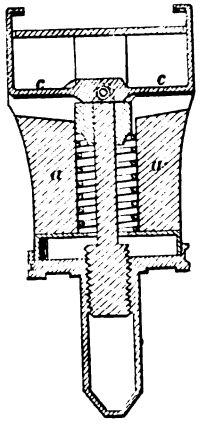

27254

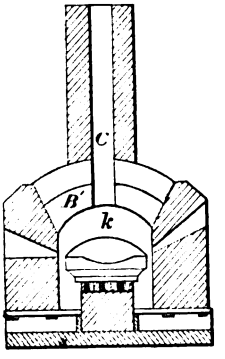

27255

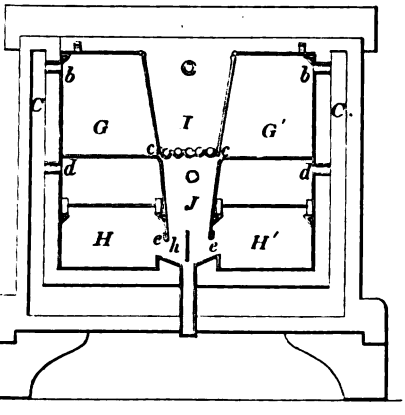

27256

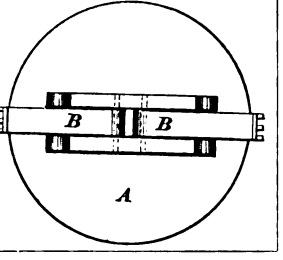

27257

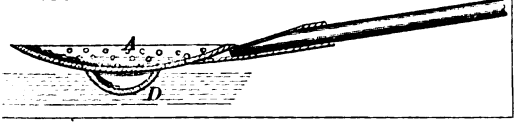

27258

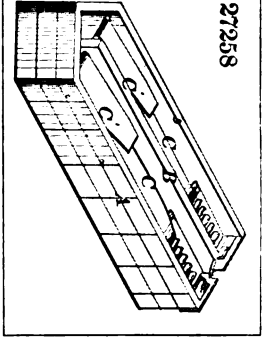

27260

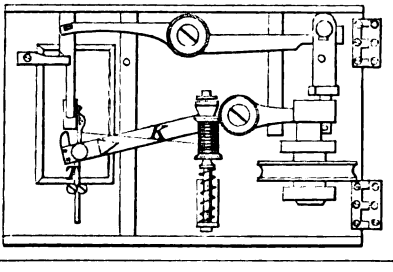

27261

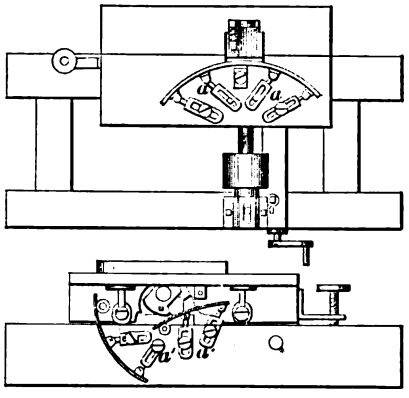

27262

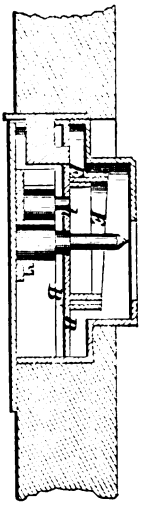

27263

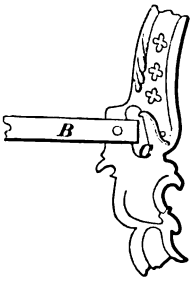

27264

27265

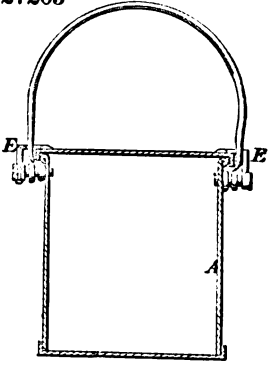

27266

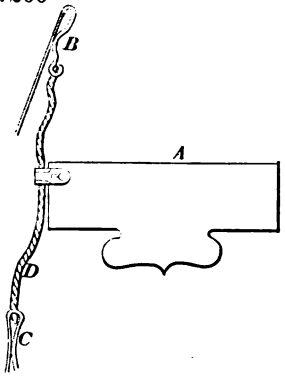

27267

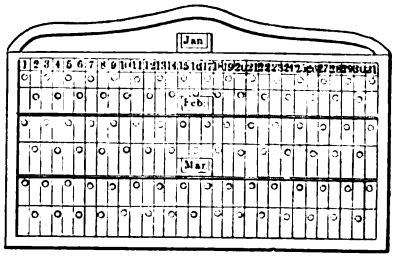

27268

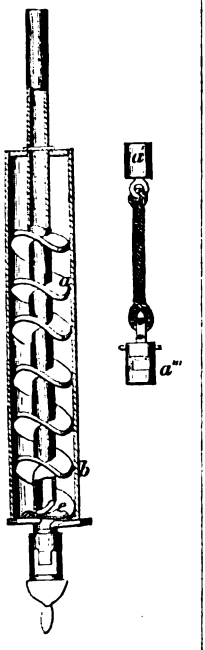

27269

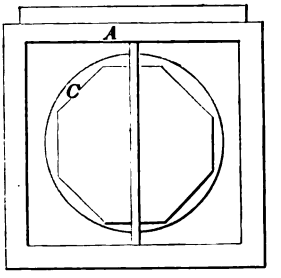

27270

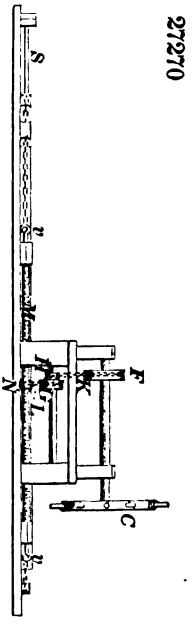

27271

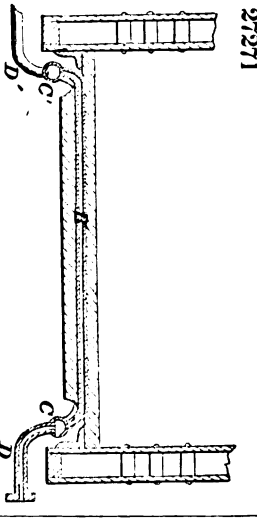

27272

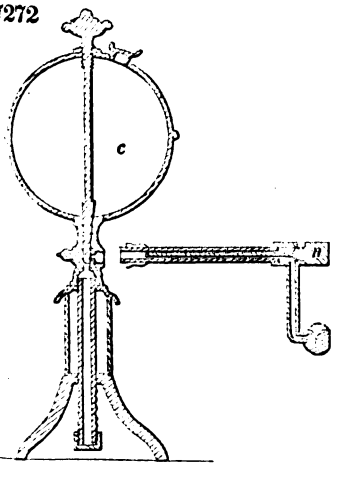

27273

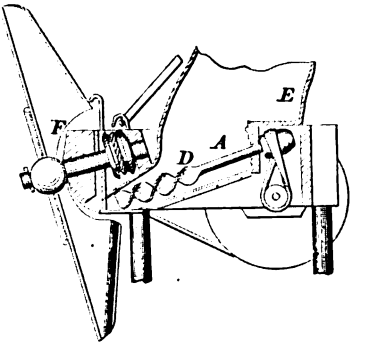

27274

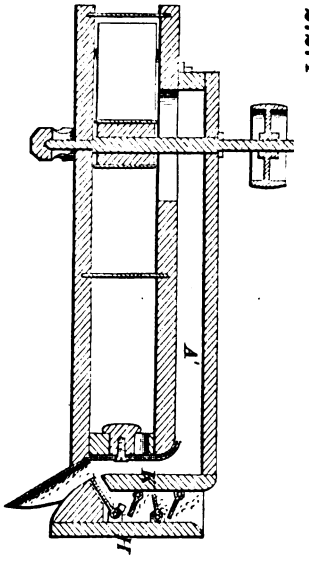

27275

Fig. 1

Fig 2

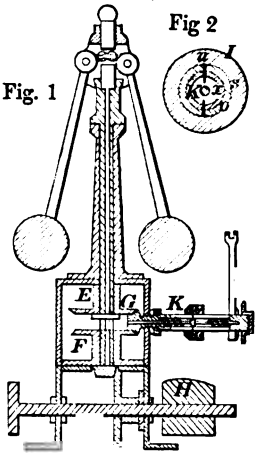

27276

27277

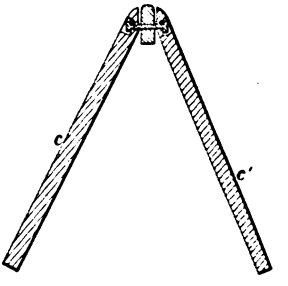

27278

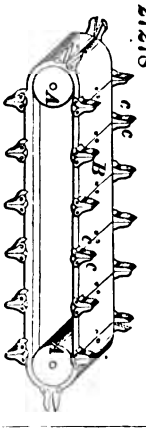

27279

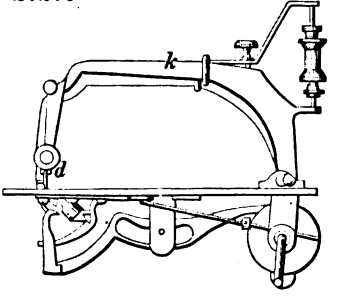

27281

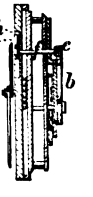

282

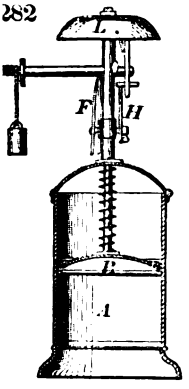

27283

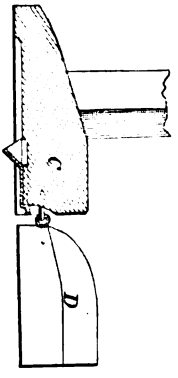

27284

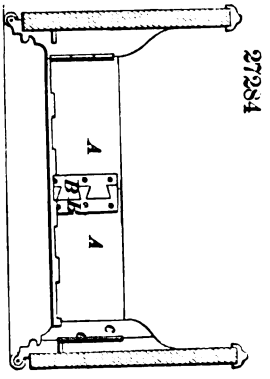

27285

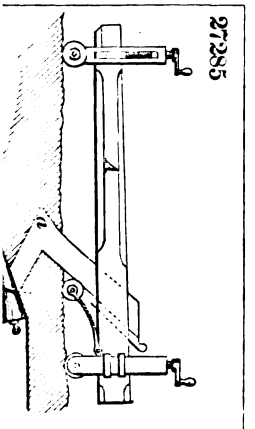

27286

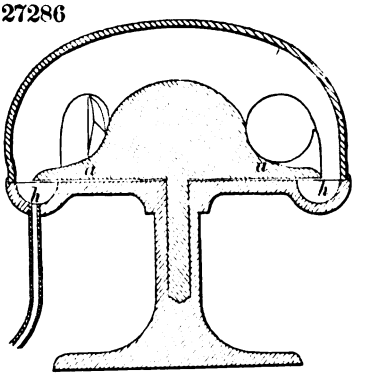

27287

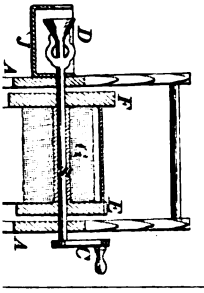

27288

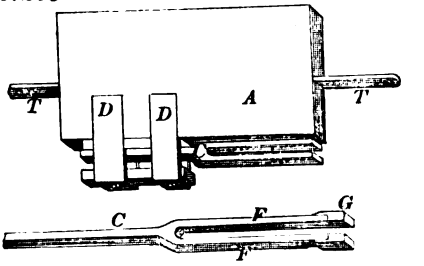

27289

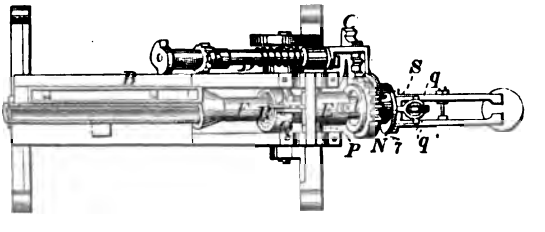

27290

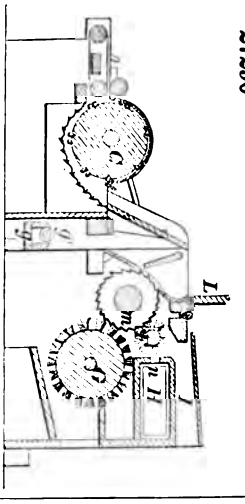

27291

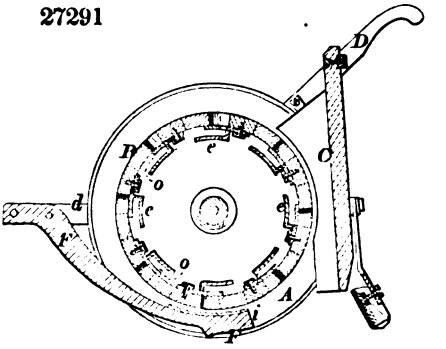

27292

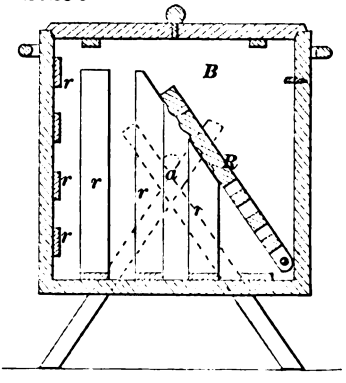

27293

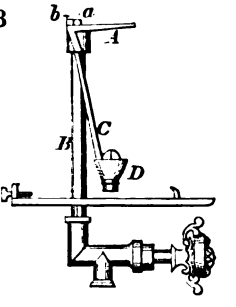

27294

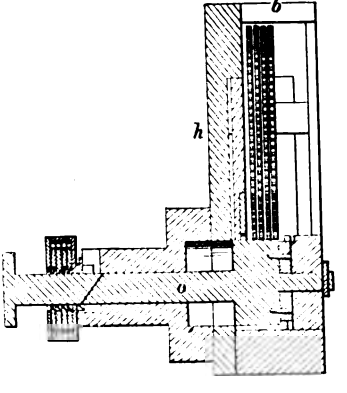

27295

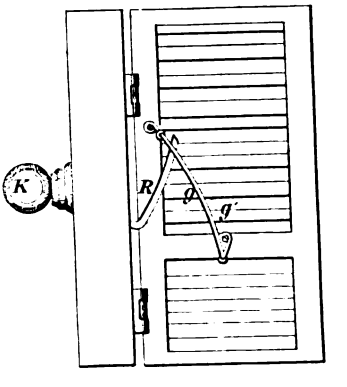

96

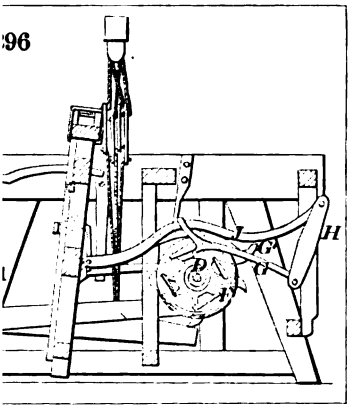

27297

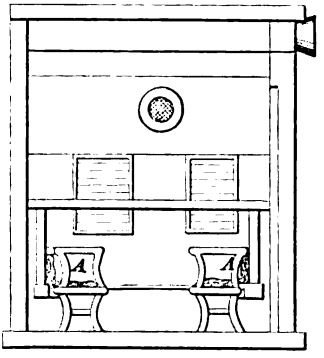

27298

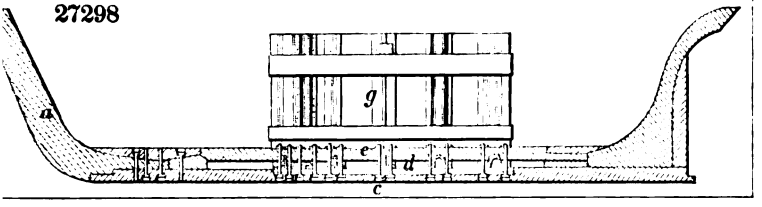

99

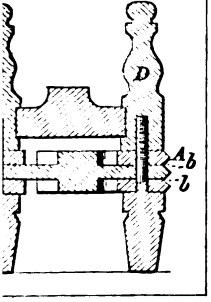

27300

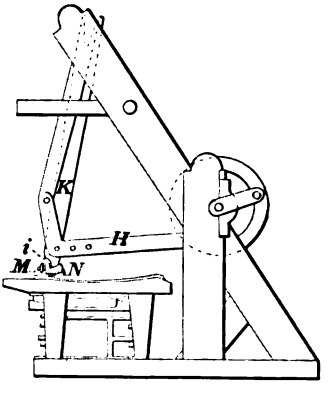

27301

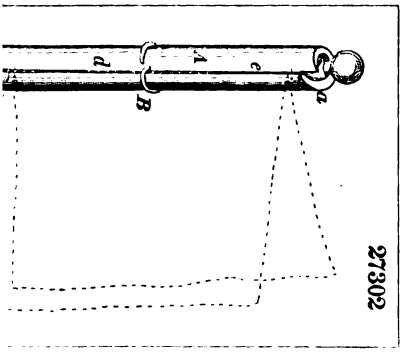

27302

27303

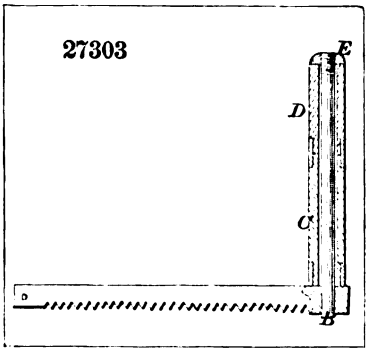

27304

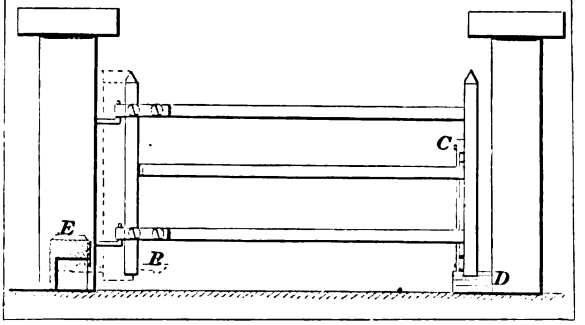

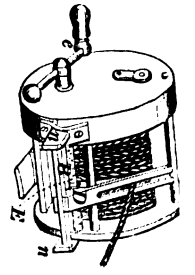

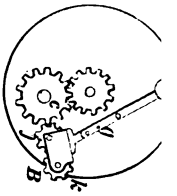

27306

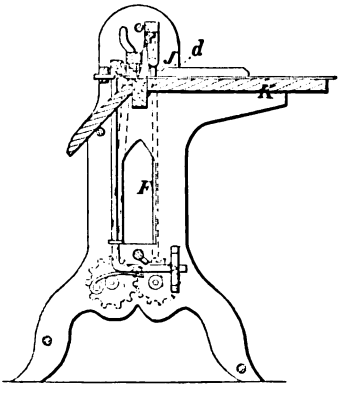

27308

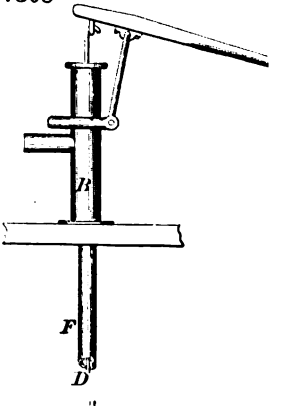

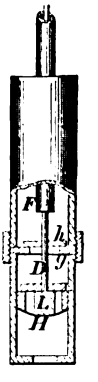

27307

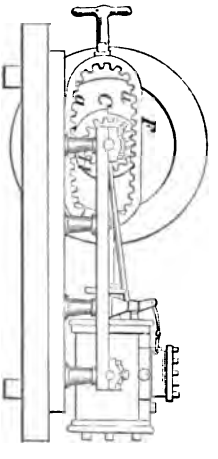

27309

Fig. 1

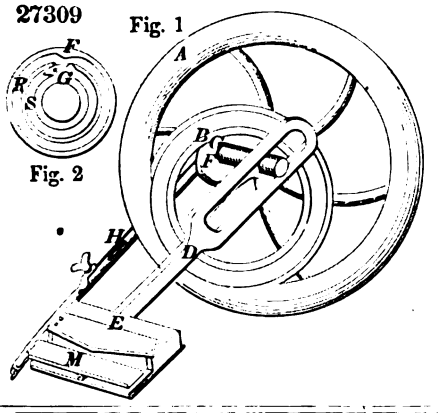

Fig. 2

27312

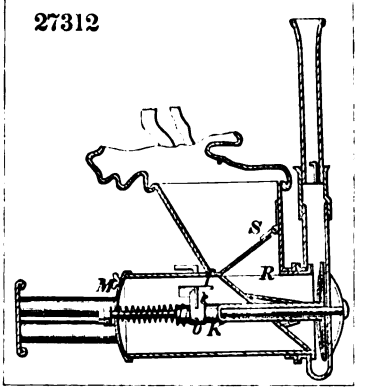

27311

27313

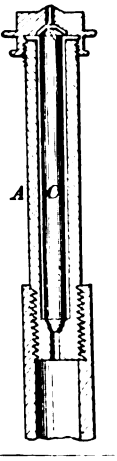

27314

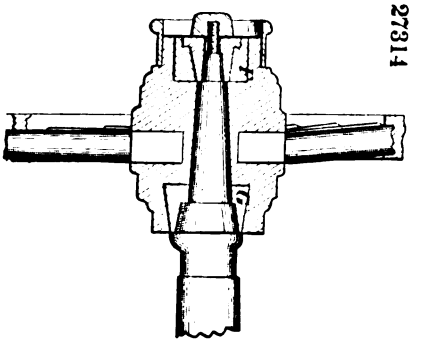

27315

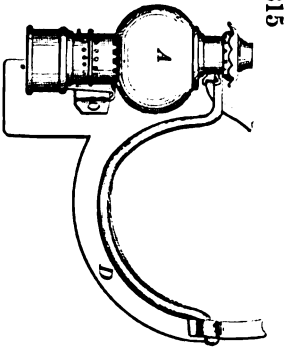

27316

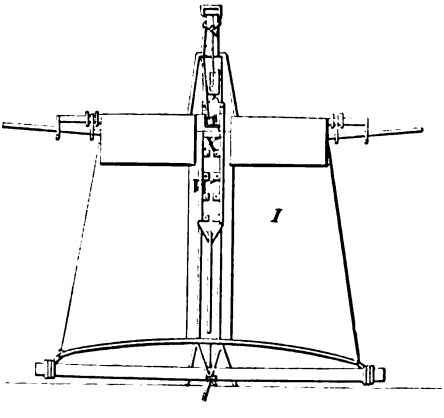

27317

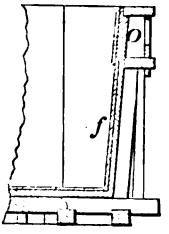

27318

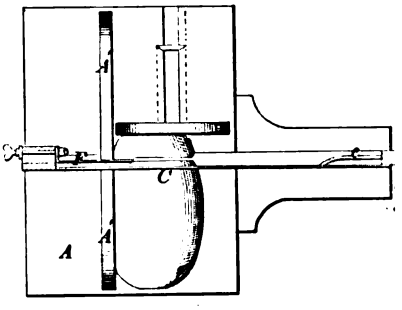

27320

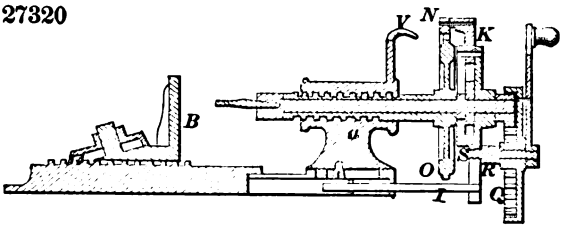

27319

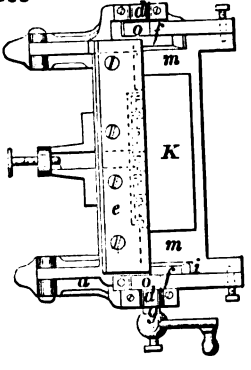

27323

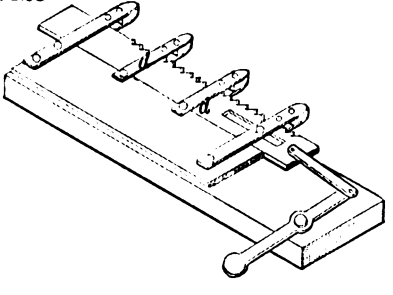

27322

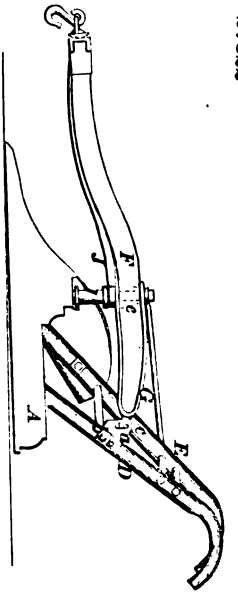

27324

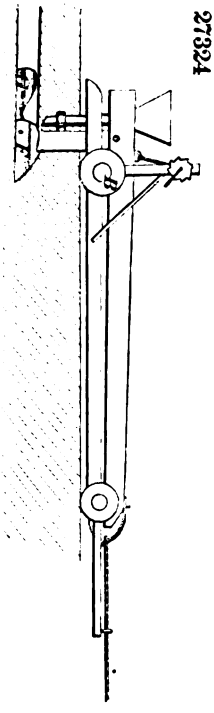

27325

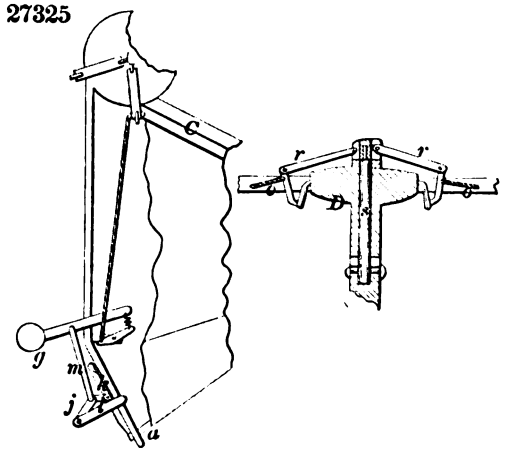

27326

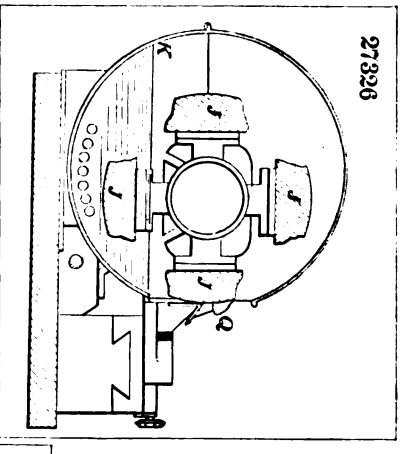

7327

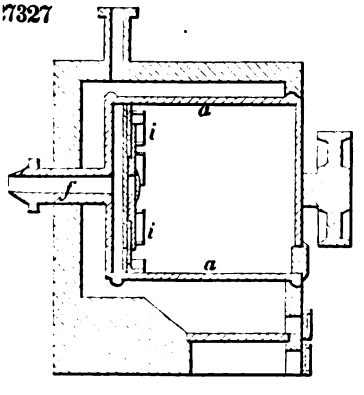

27328

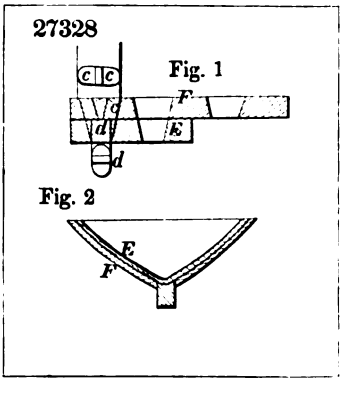

27330

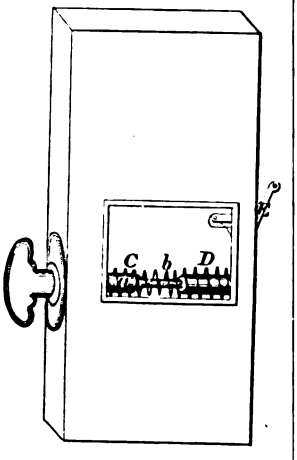

27332

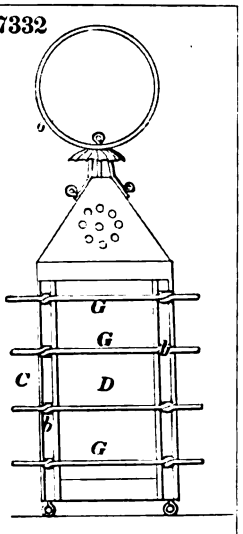

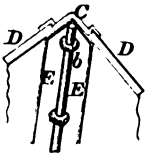

27333

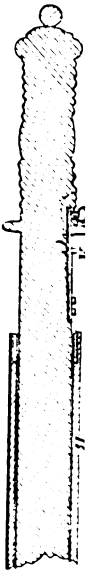

27329

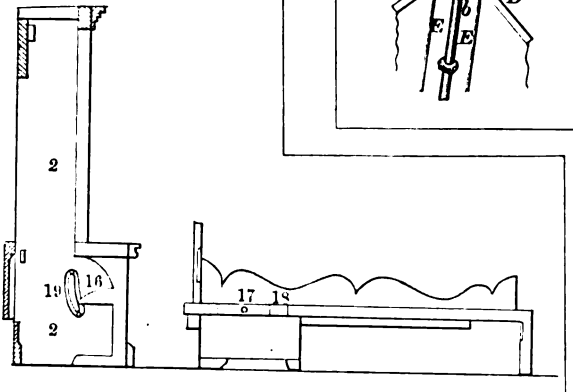

27334

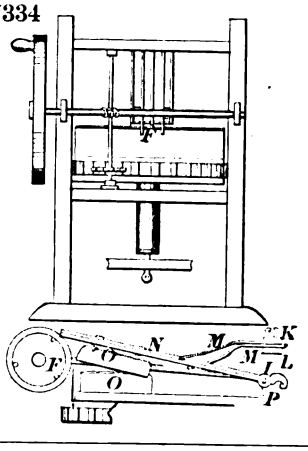

27336

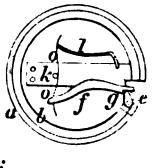

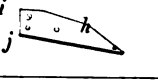

27339

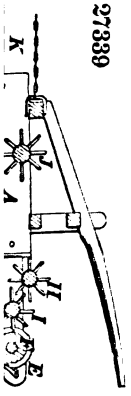

27340

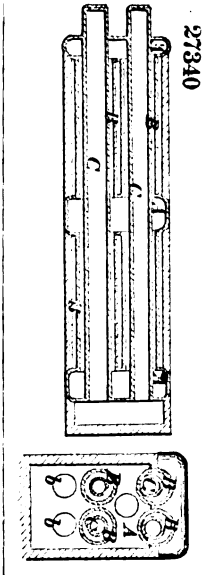

27341

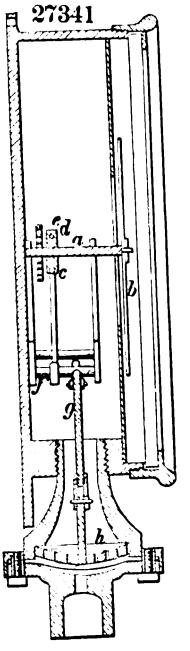

27342

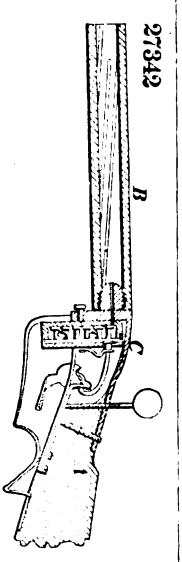

44.

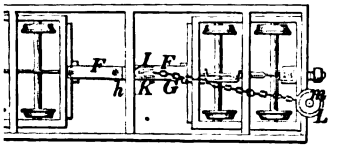

27345

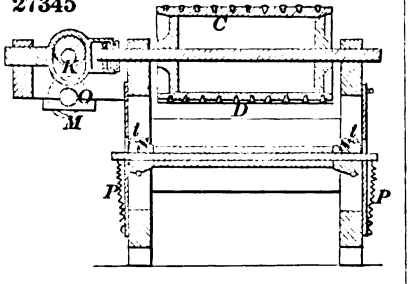

46

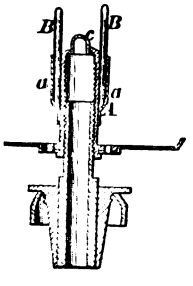

27347

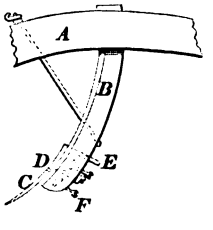

27349

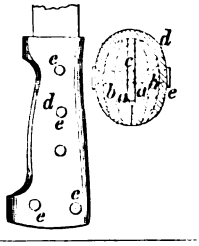

27348

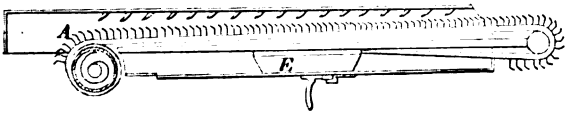

27350

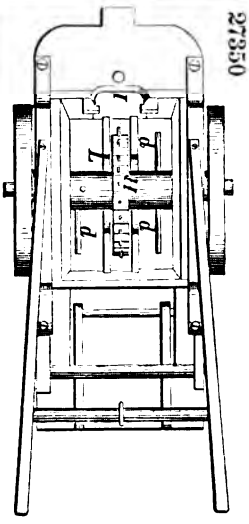

27351

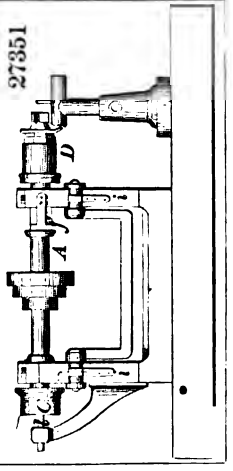

27352

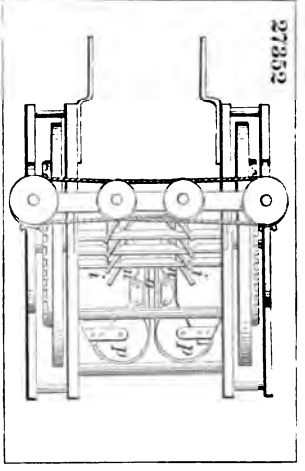

27353

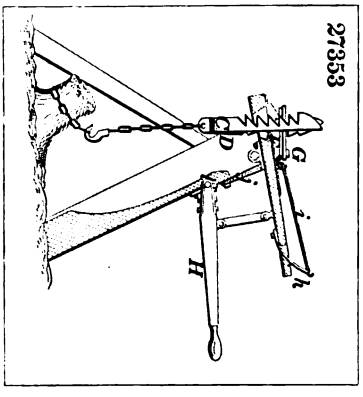

27354

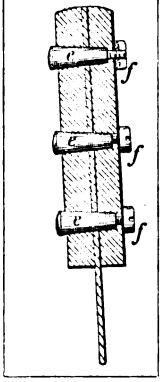

27355

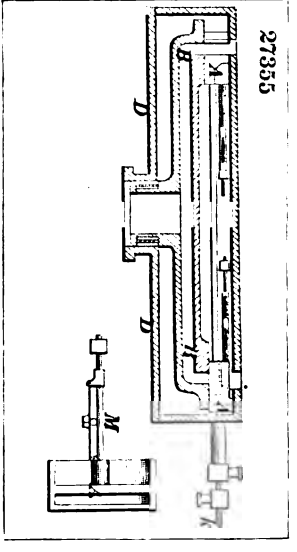

27356

Fig. 1

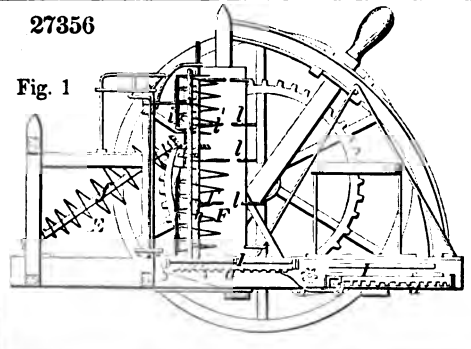

Fig 2

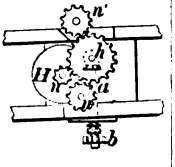

27358

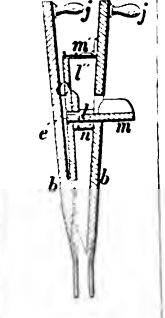

27357

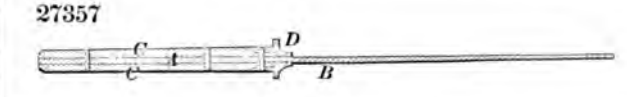

27359

27360

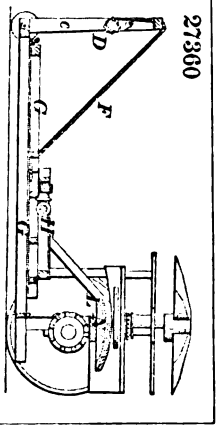

27361 Fig. 1

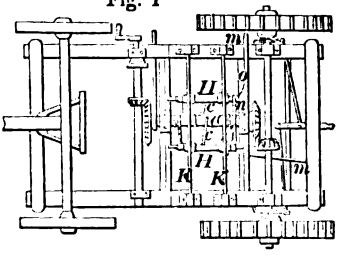

Fig 2

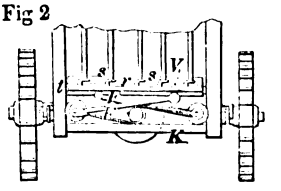

27362

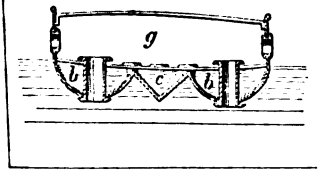

27363

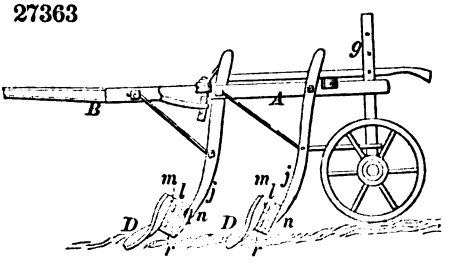

27364

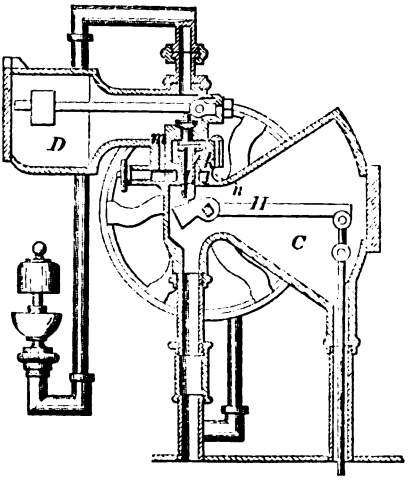

27365

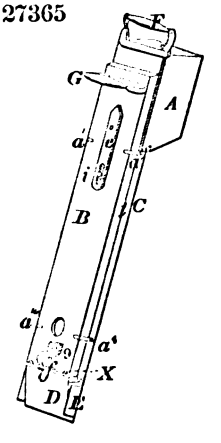

27366

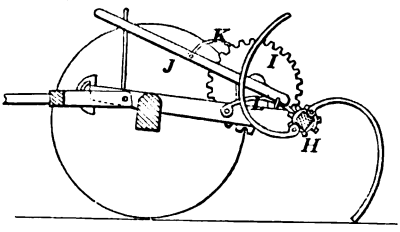

27367

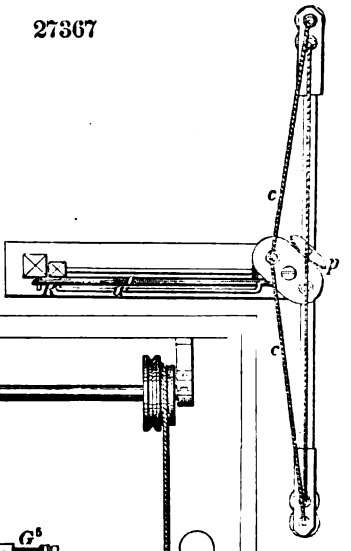

27370

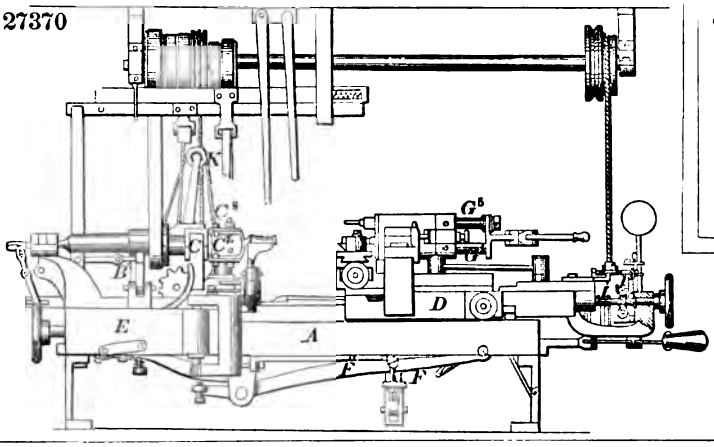

27371

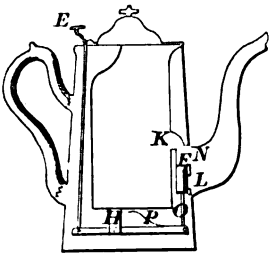

27368

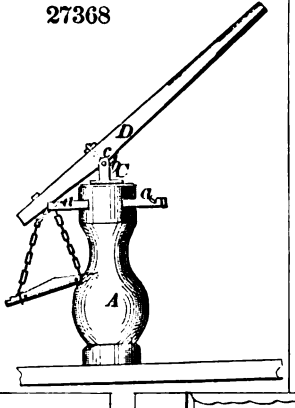

27369

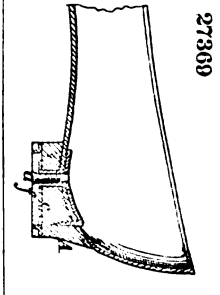

27373

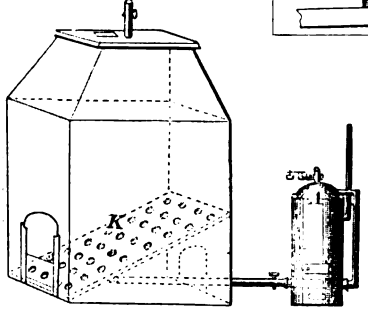

27372

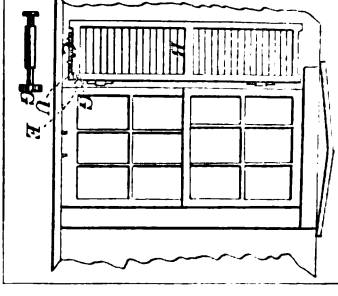

27374

Fig. 1

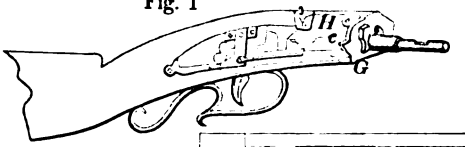

Fig 2

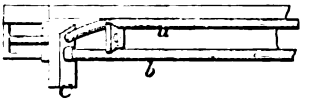

27376

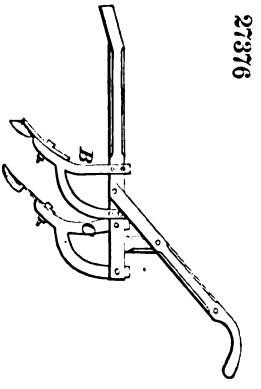

27377

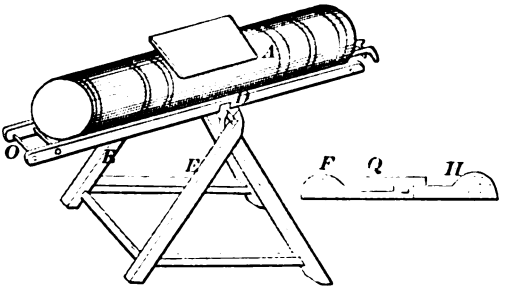

27378

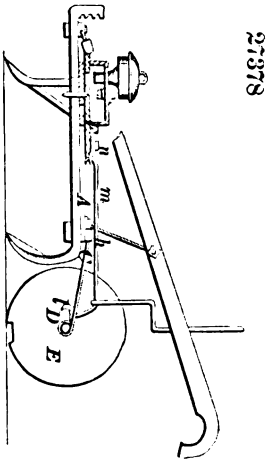

27380

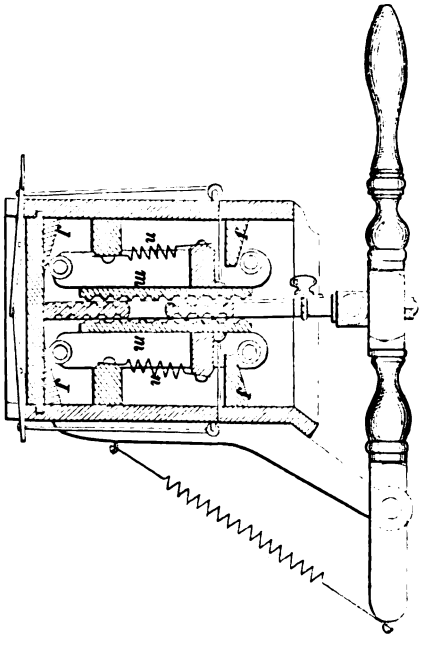

27379

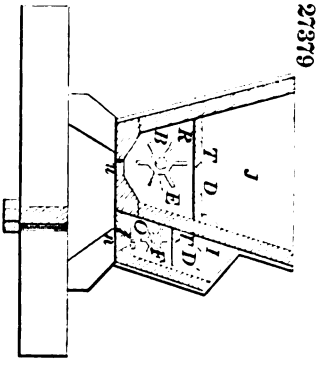

27381

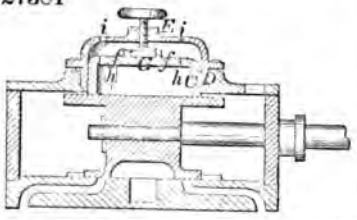

27382

27385

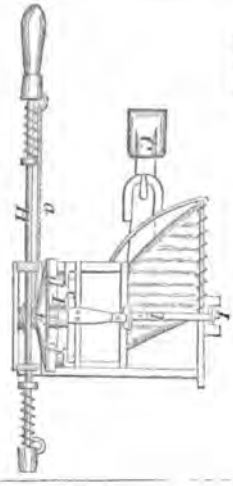

27383

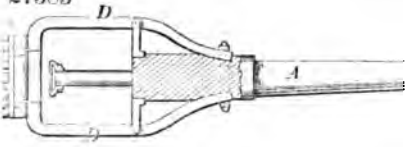

27384

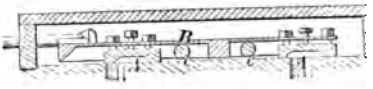

27386

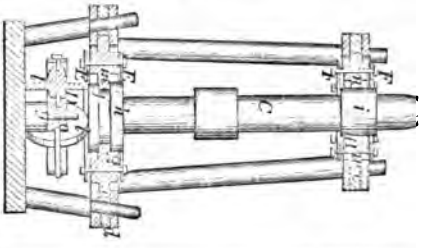

27388

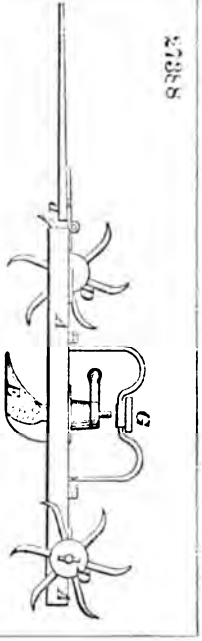

27387

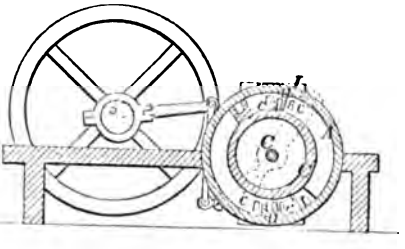

27390

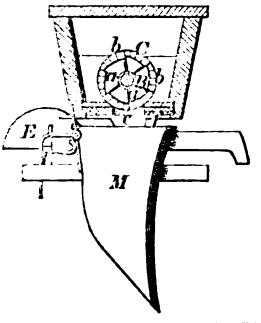

27391

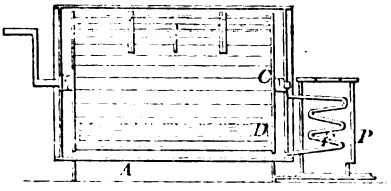

27392

Fig. 1

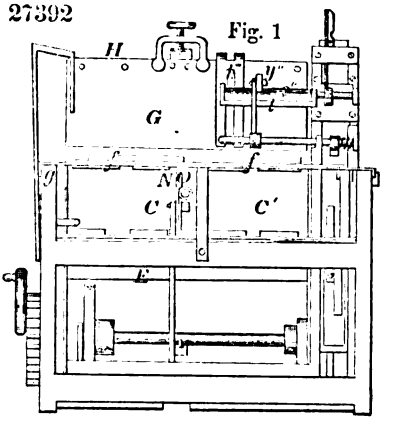

Fig 2

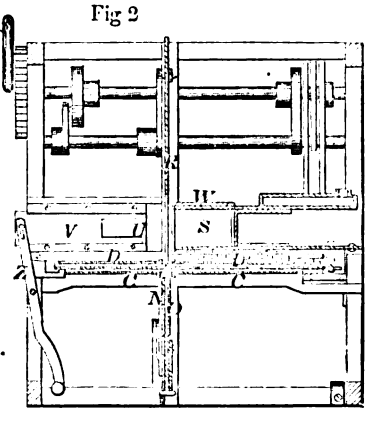

27393

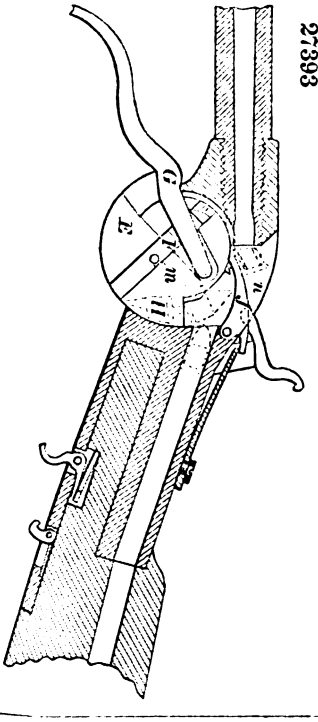

27395

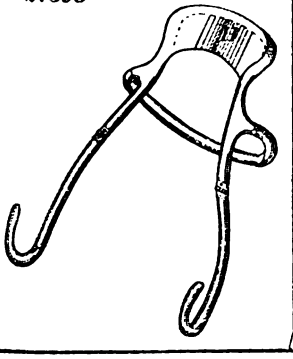

27394

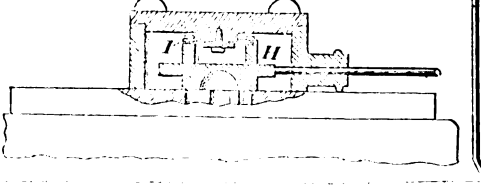

27396

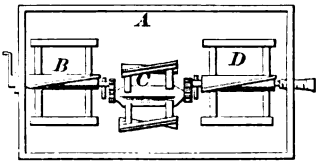

27398

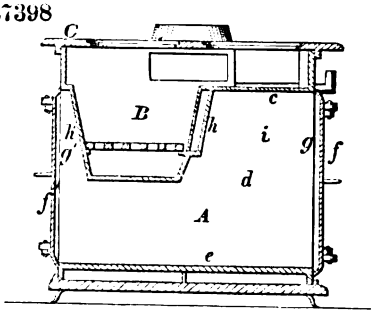

27397

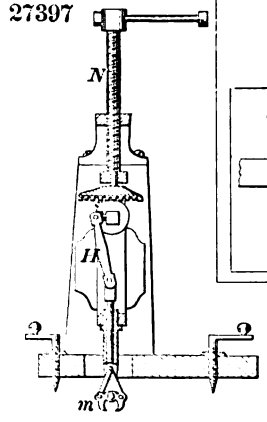

27399

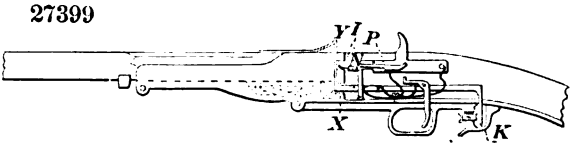

27402

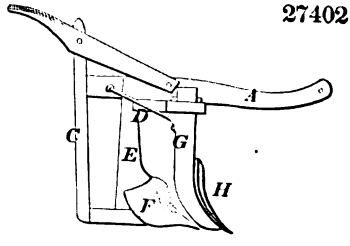

27400

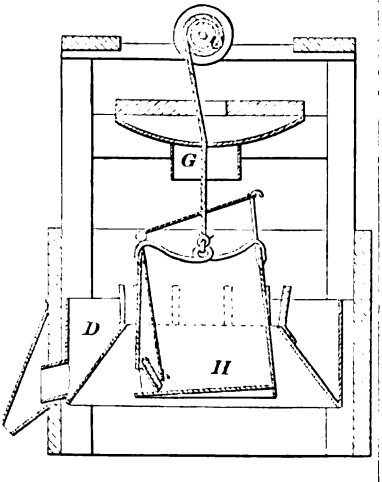

27403

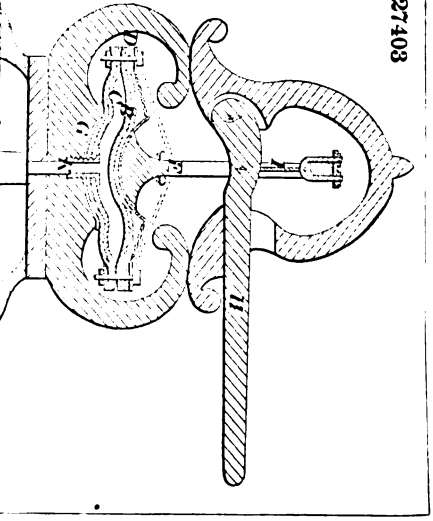

27404

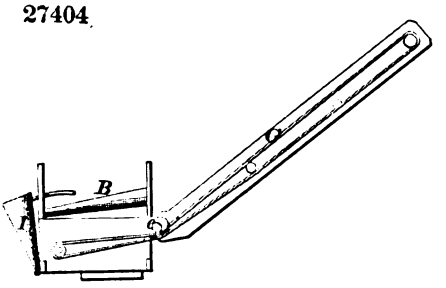

27405

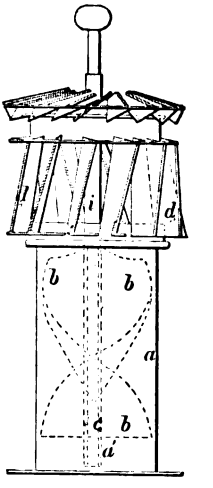

27406 Fig. 1

Fig. 2

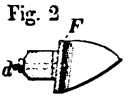

27407

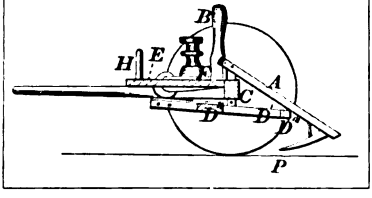

27408

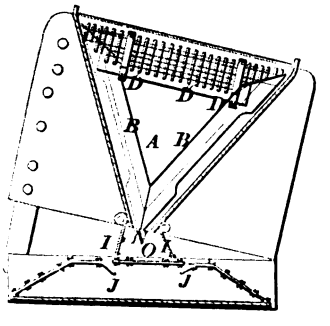

27409

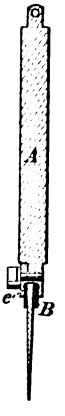

27410

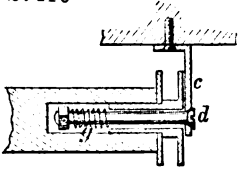

27411

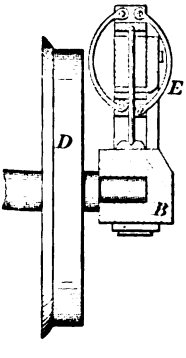

27412

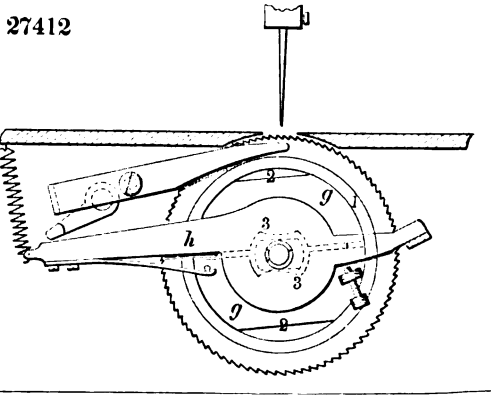

27413

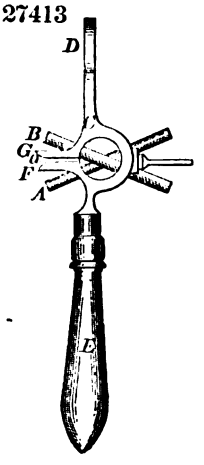

27414

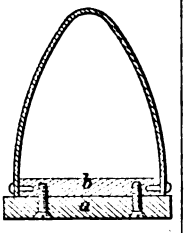

27415

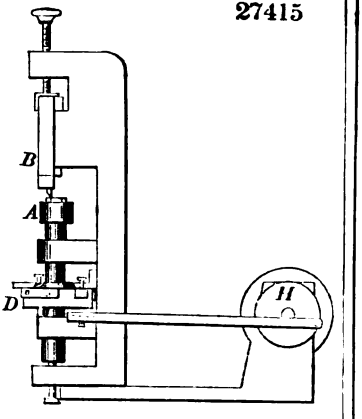

27416

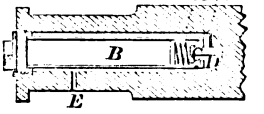

27417

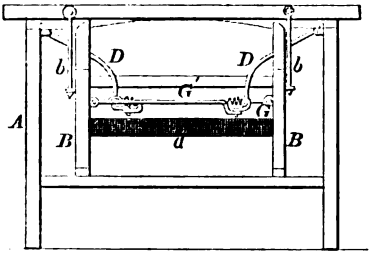

27418

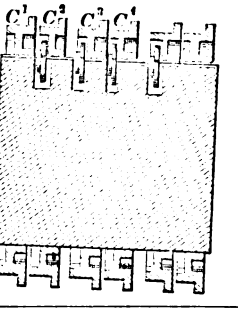

27419

Fig. 1

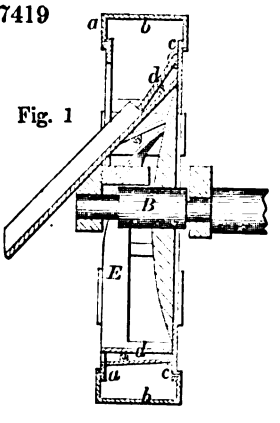

Fig. 2

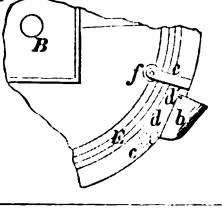

27420

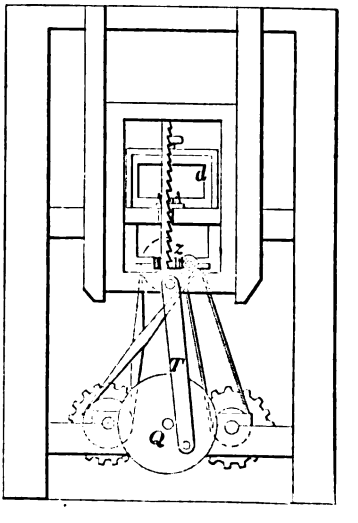

7421

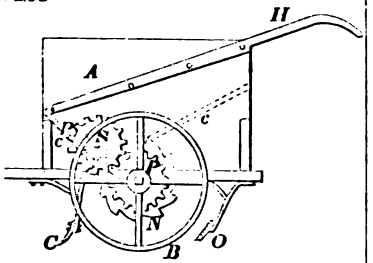

27423

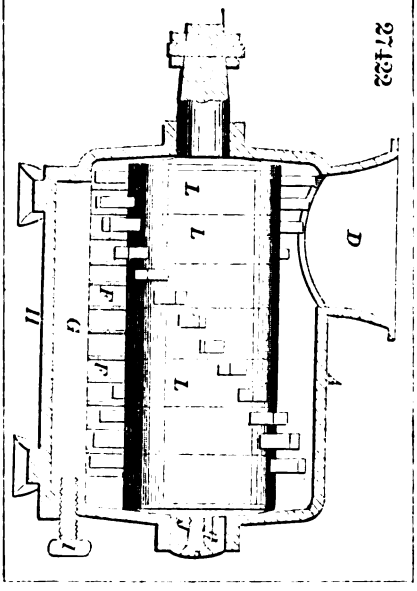

27423

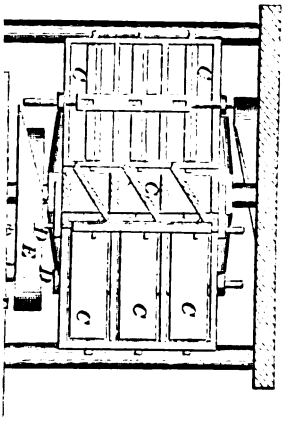

27424

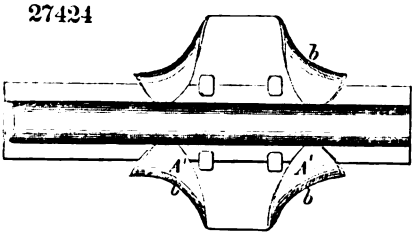

427

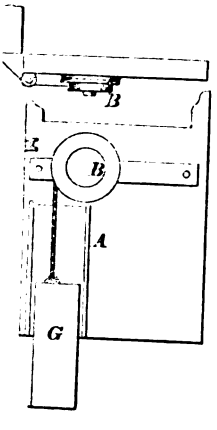

27426

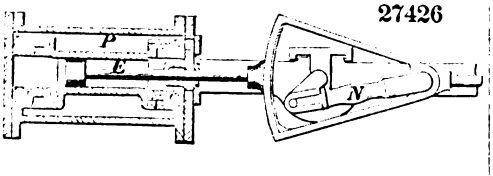

27428

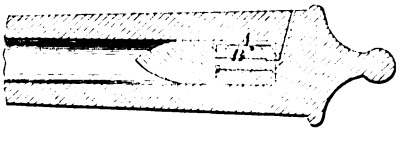

27429

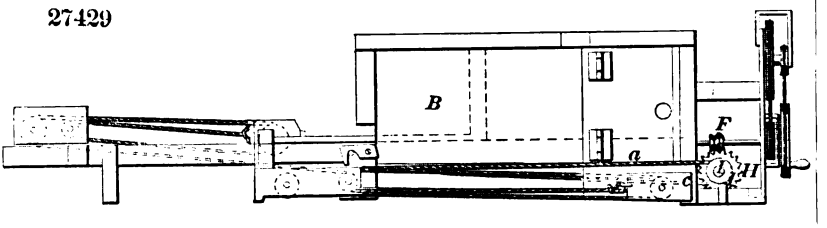

27430

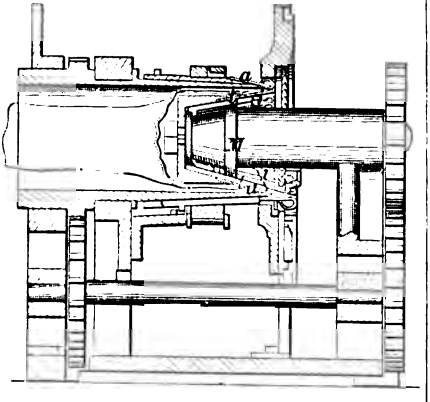

27431

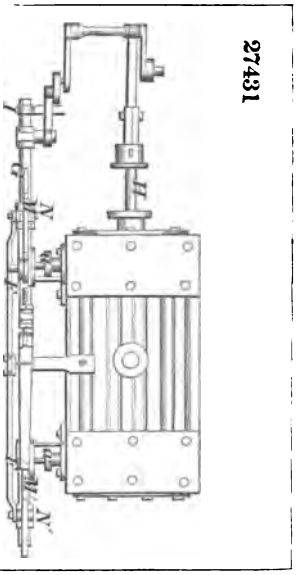

27432

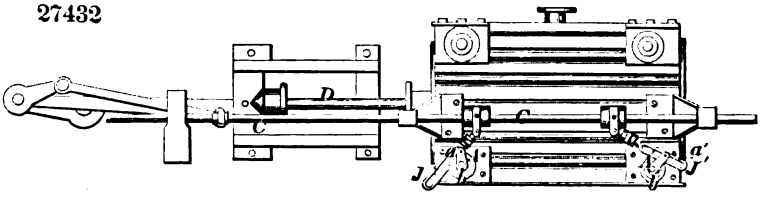

27433

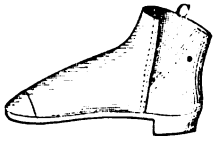

27434

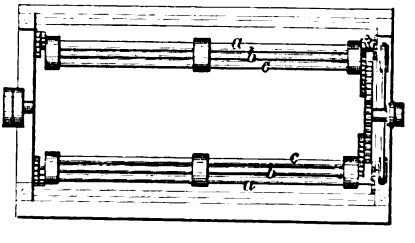

27435

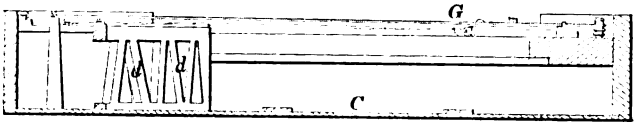

27436

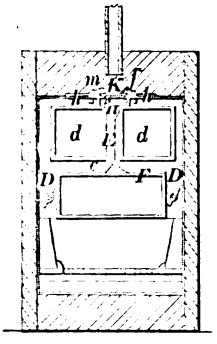

27437

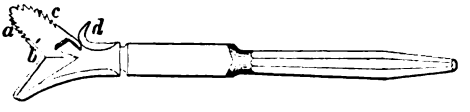

27438

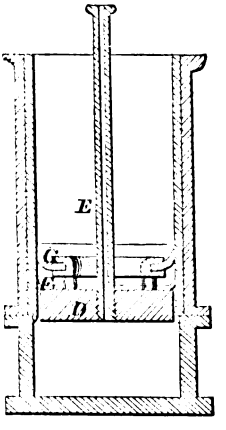

27439

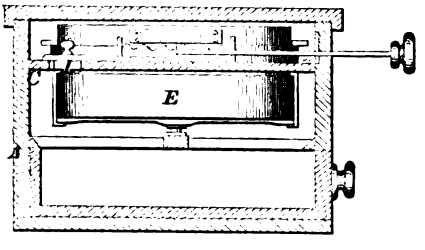

27441

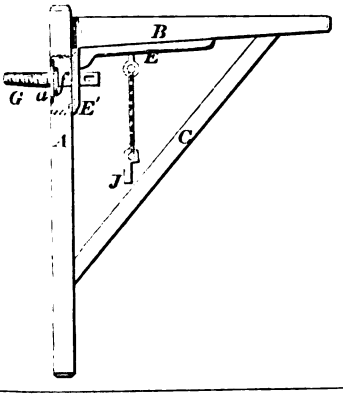

27442

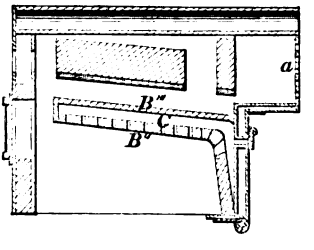

27443

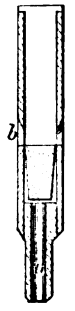

27444

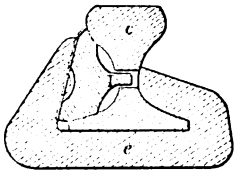

27445

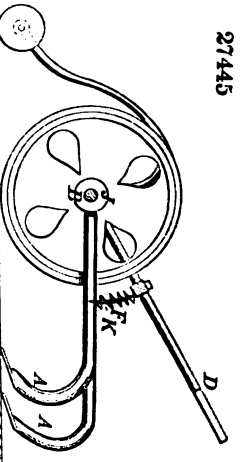

27446

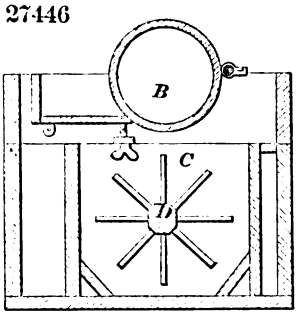

27447

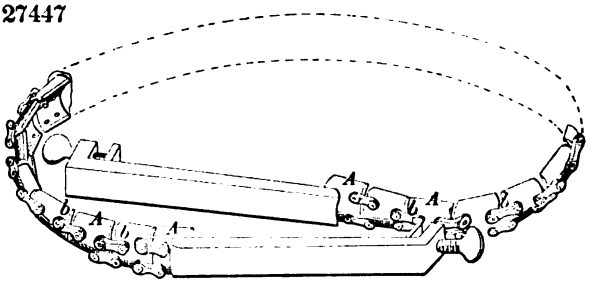

27448

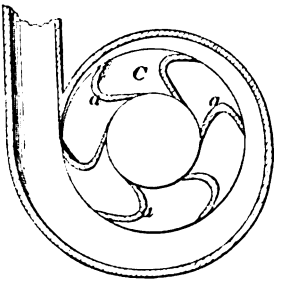

27449

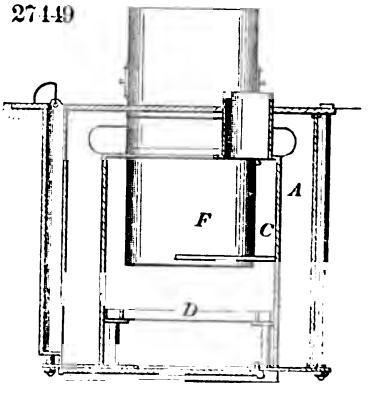

27450

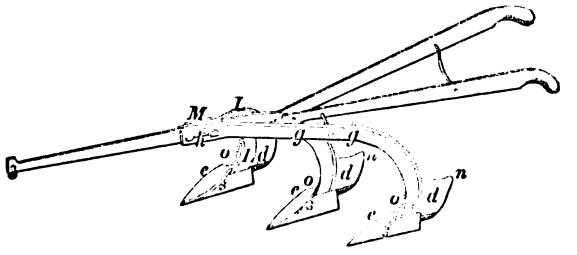

27452

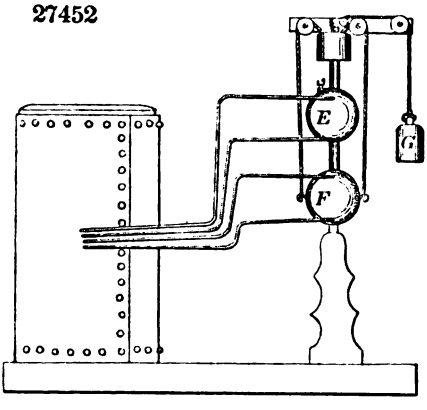

27451

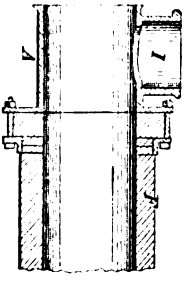

27453

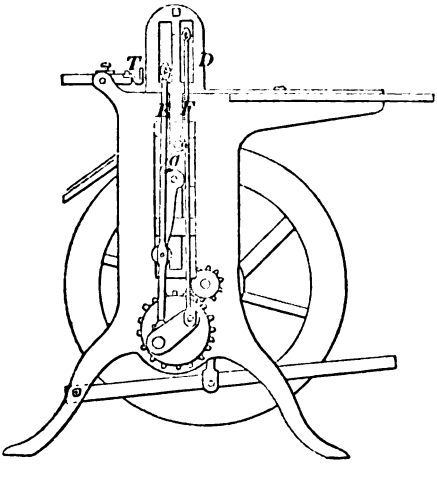

27454

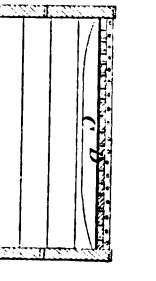

27455

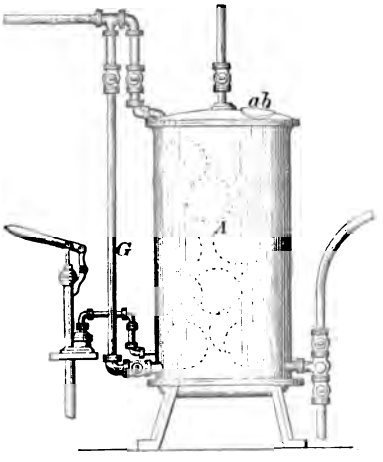

27456

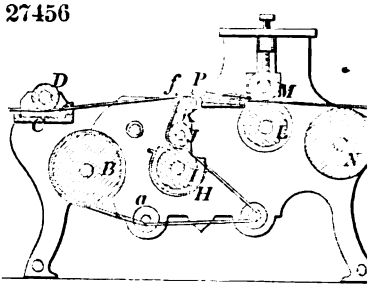

27457

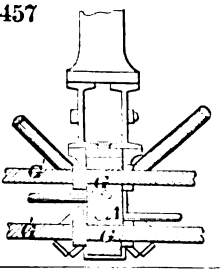

27458

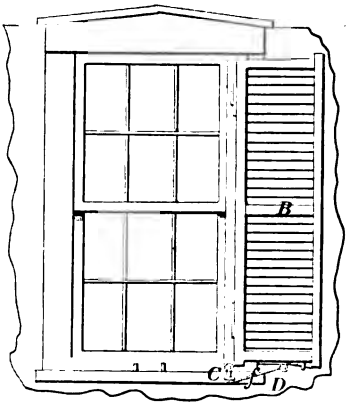

27459

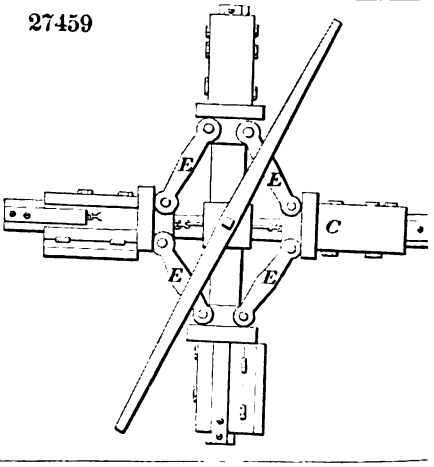

27460

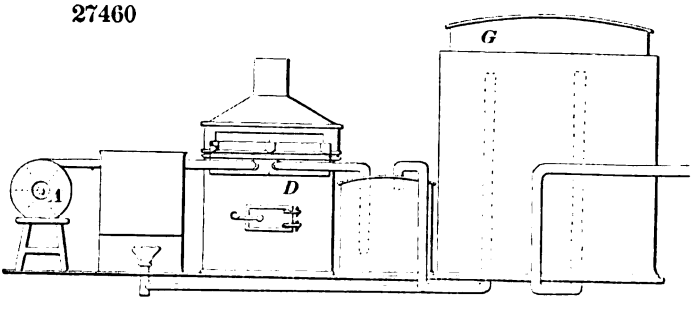

27461

27462

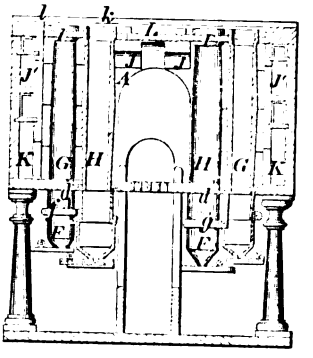

27463

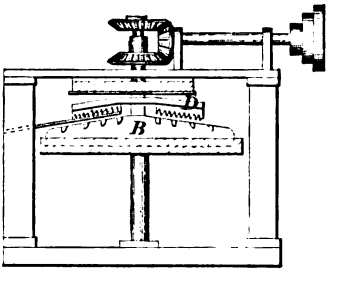

27464

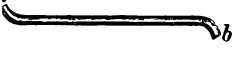

27465

Fig. 1

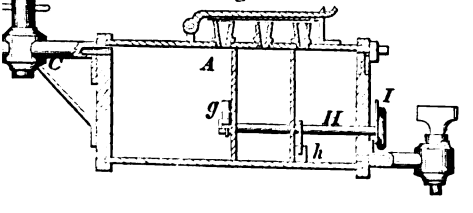

Fig. 2

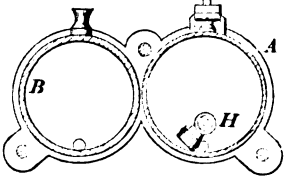

27466

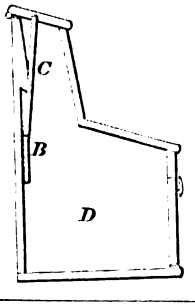

27467

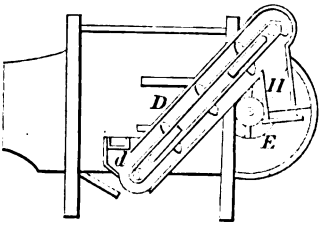

27468

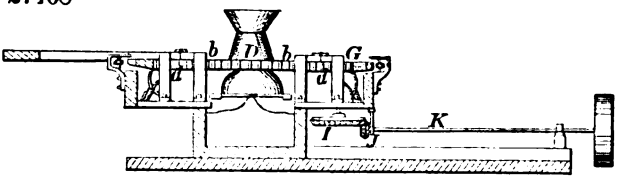

27469

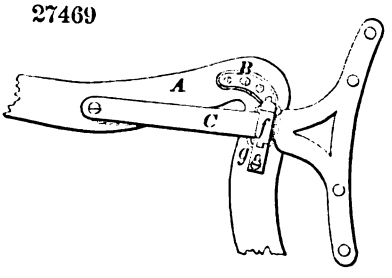

27470

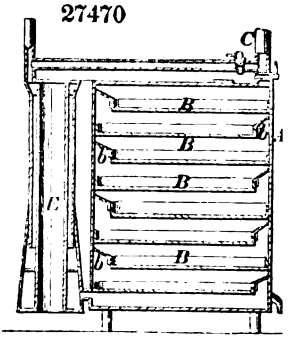

27472

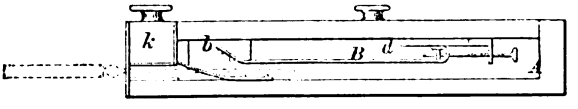

27473

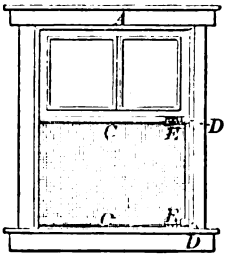

27474

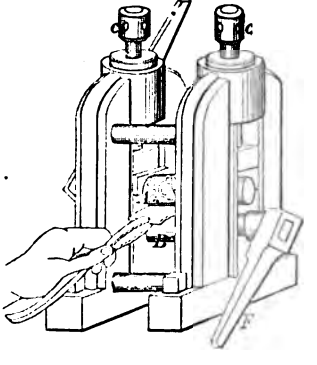

27476

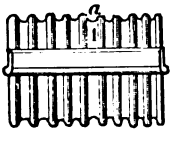

27475

27477

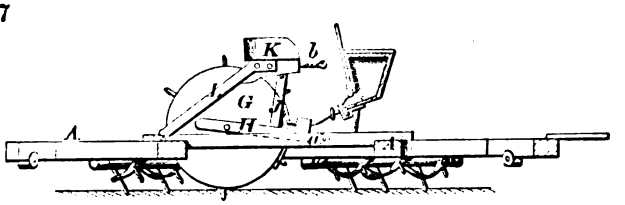

27478

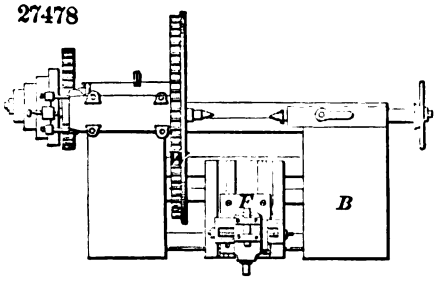

27479

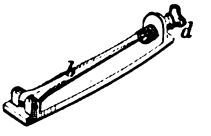

27482

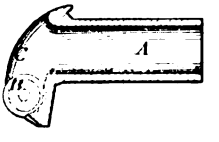

27481

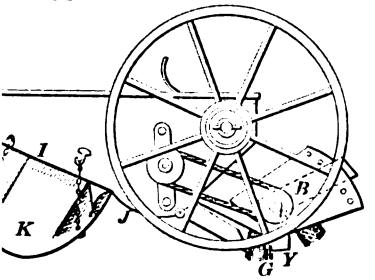

27483

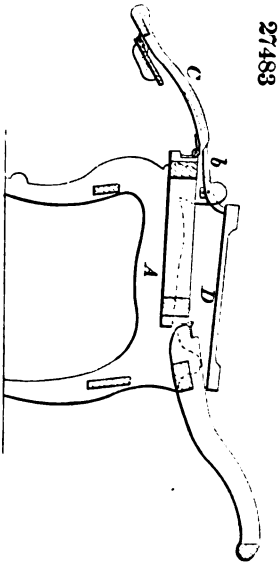

27484

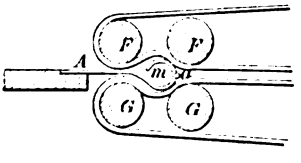

27485

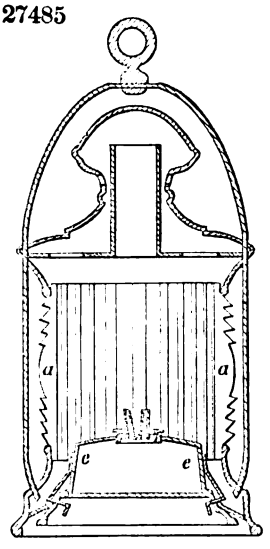

27486

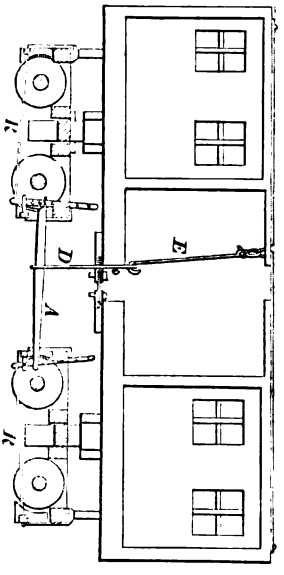

27487 Fig. 1

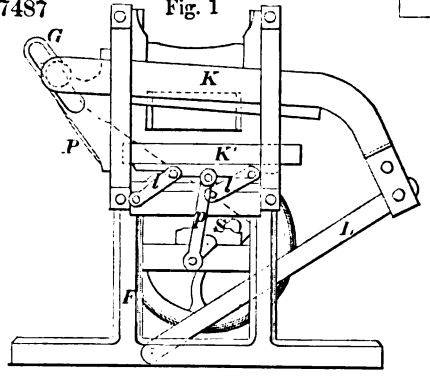

Fig. 2

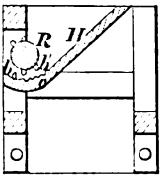

27488

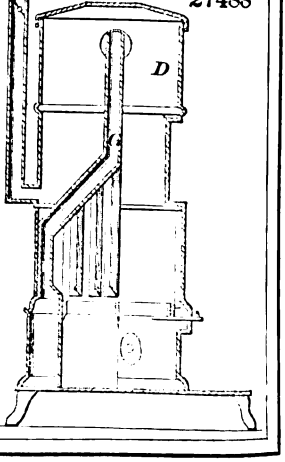

27489

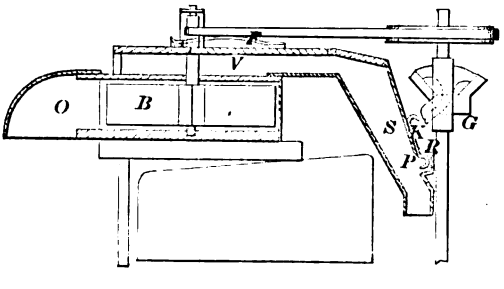

27490

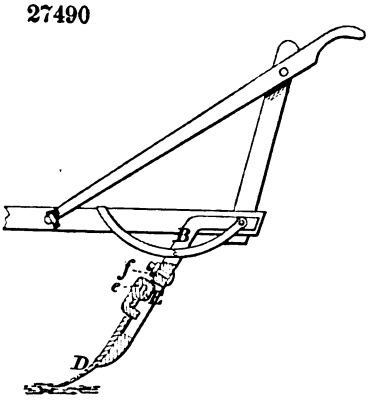

27491

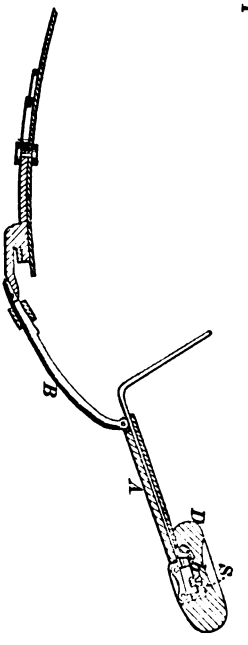

7492

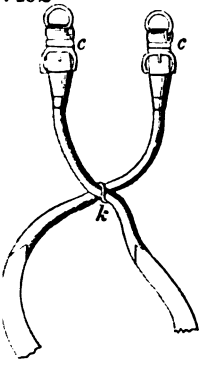

27493

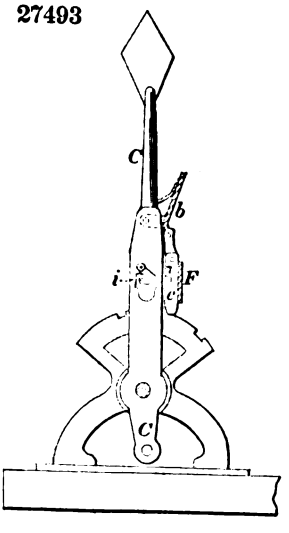

27494

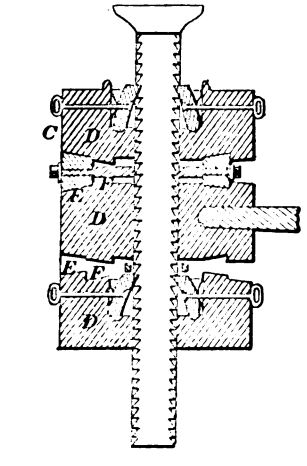

27495

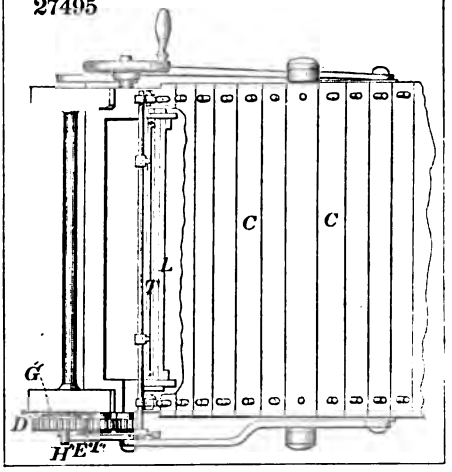

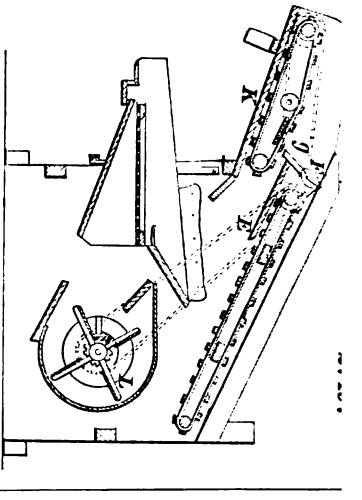

27498

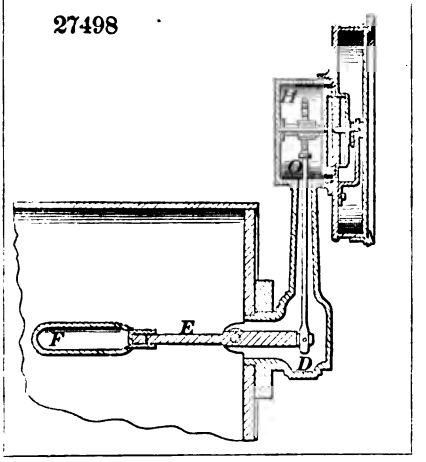

27499

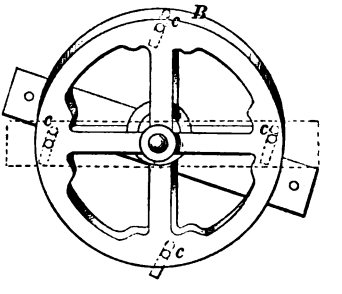

27501

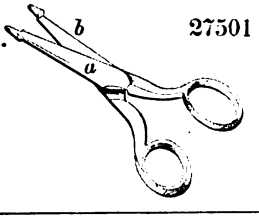

27503

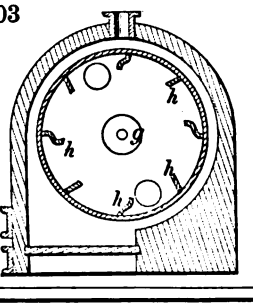

27500

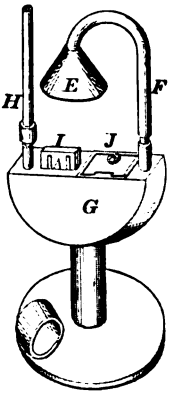

27504

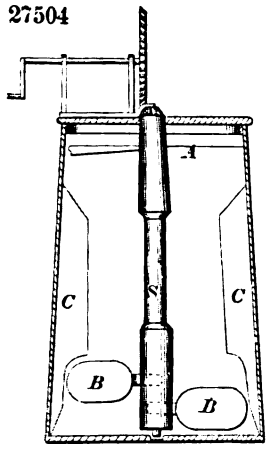

27505

27506

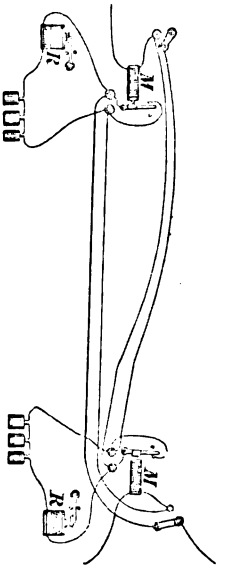

27507

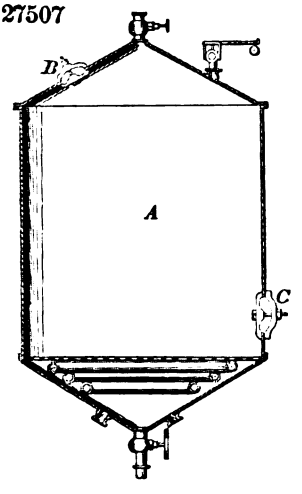

27508

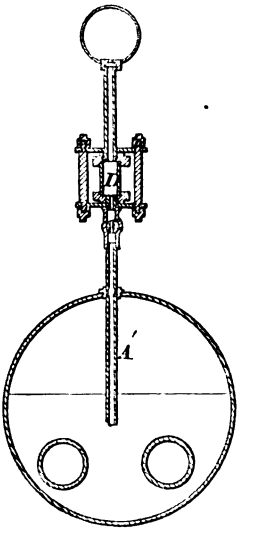

27509

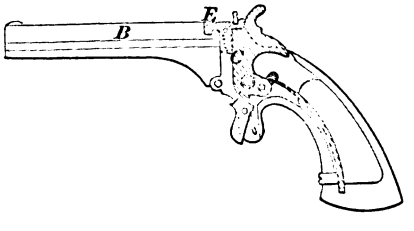

27510

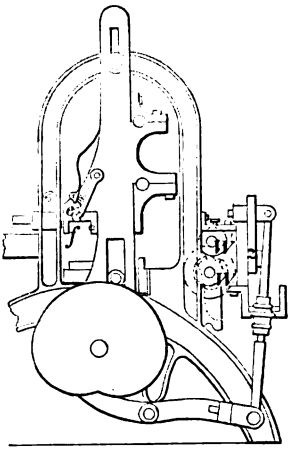

27511

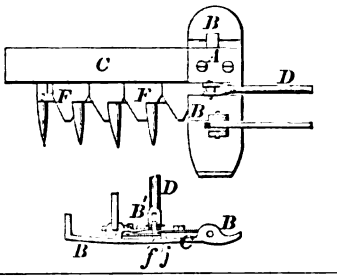

27512

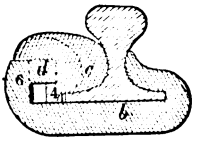

27513

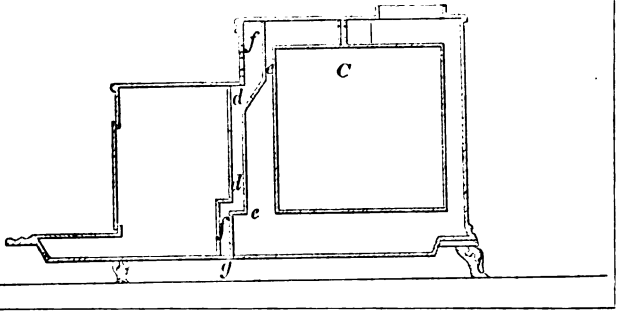

27514

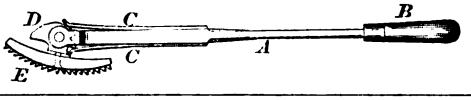

27516

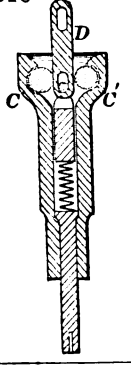

27515

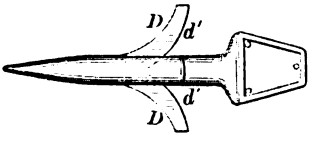

27517

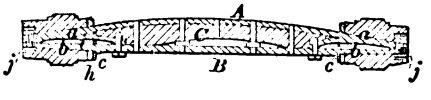

27518

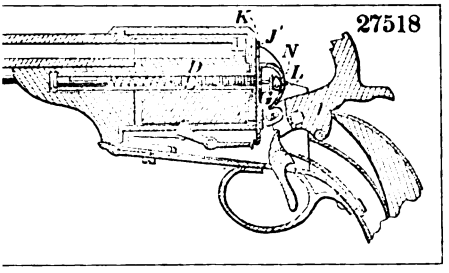

27519

27521

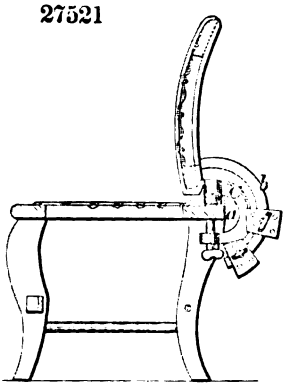

27522

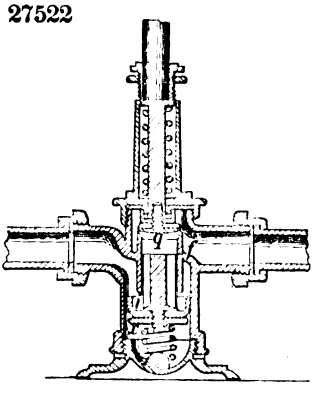

27524

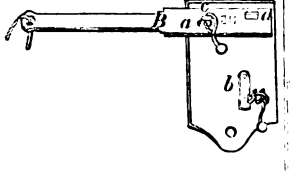

27523

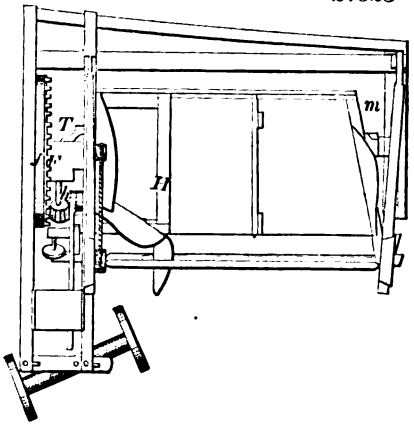

27525

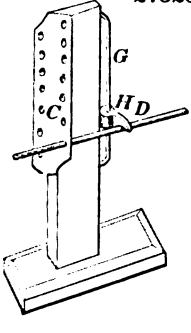

27526

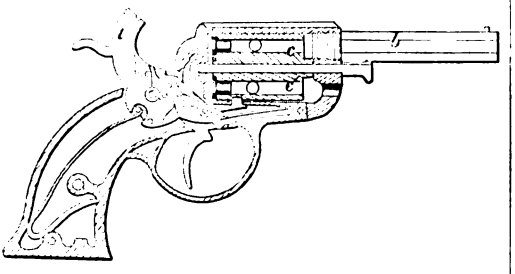

27527

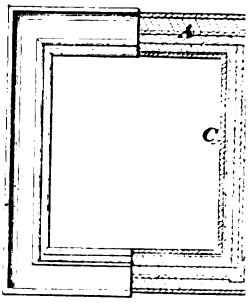

27529

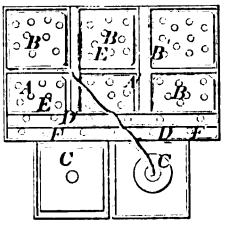

27530

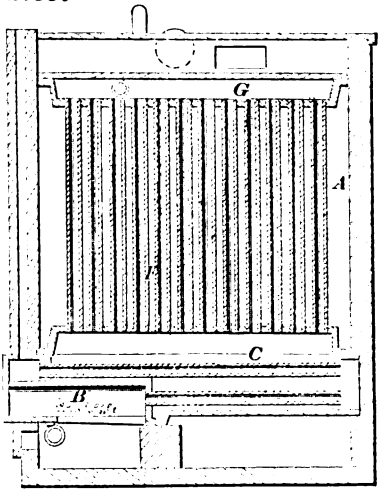

27528

27531

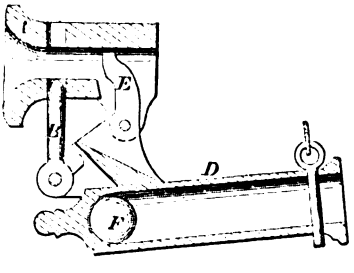

27532

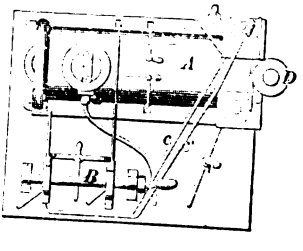

27533

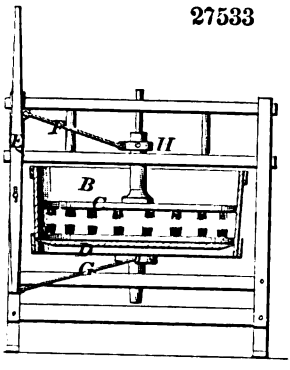

27534

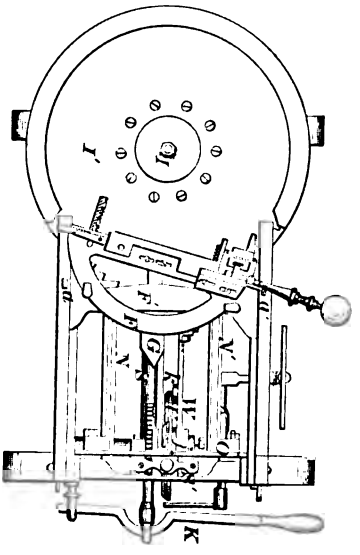

35 Fig. 1

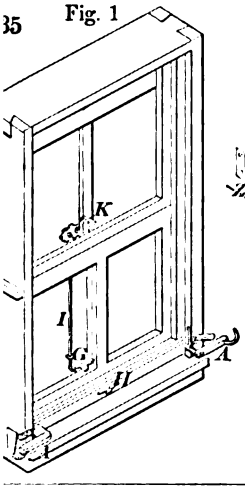

Fig. 2

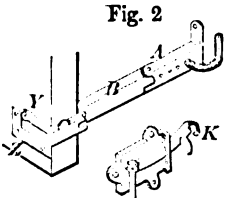

Fig. 3

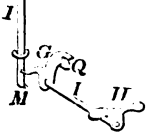

27536

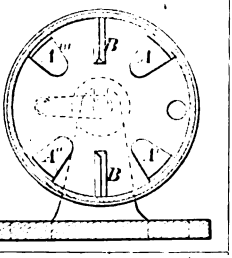

27537

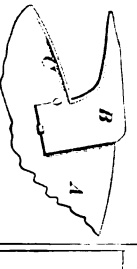

38

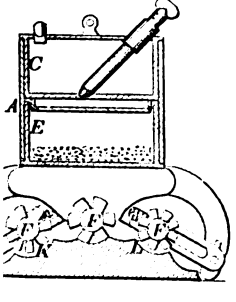

27539

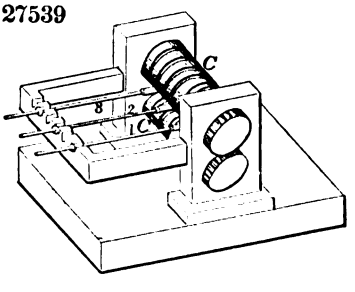

27541

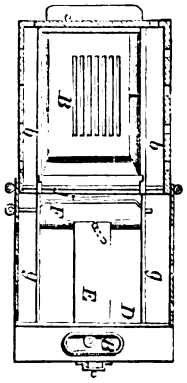

27542

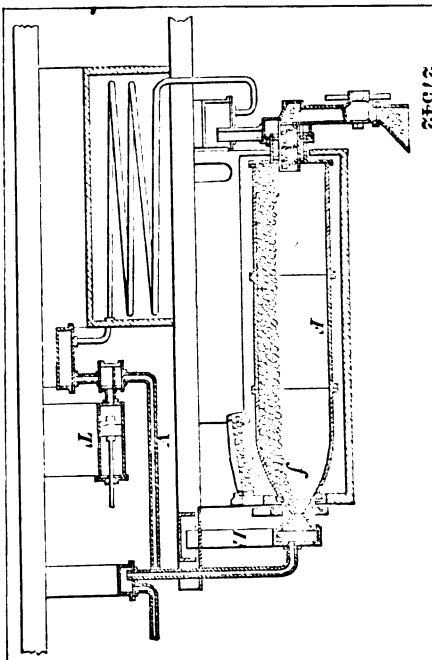

27543

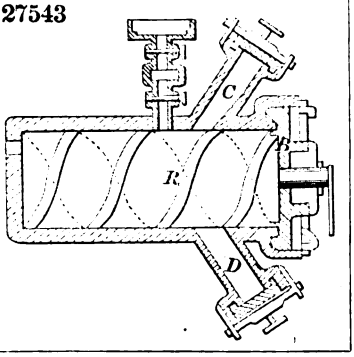

27544

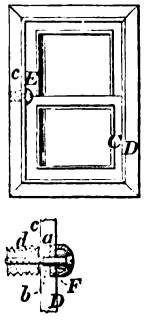

27545

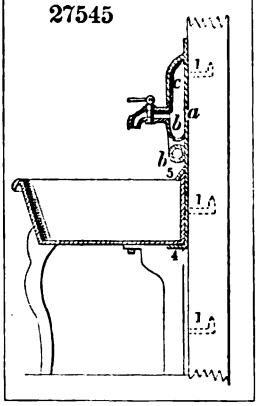

27546

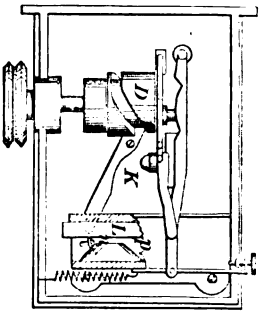

27547

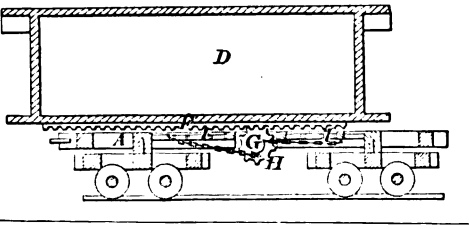

27548

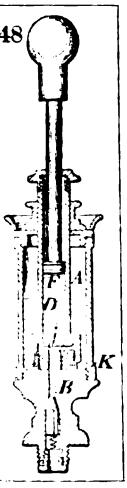

27549

27550

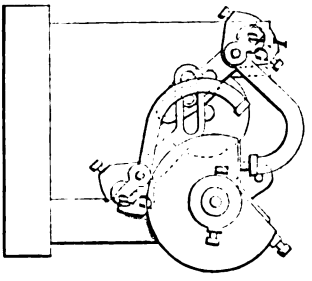

27551

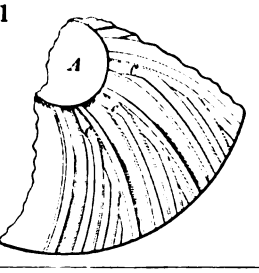

27552

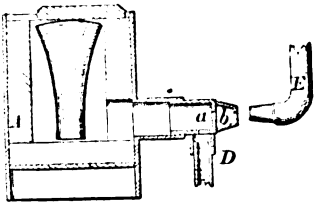

27553

27555

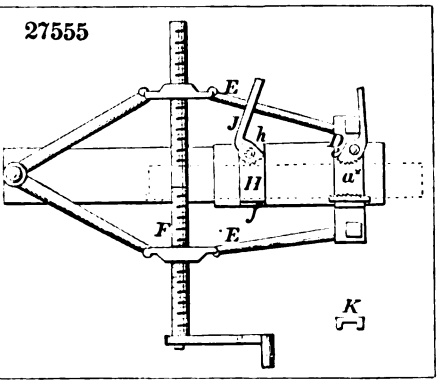

27556

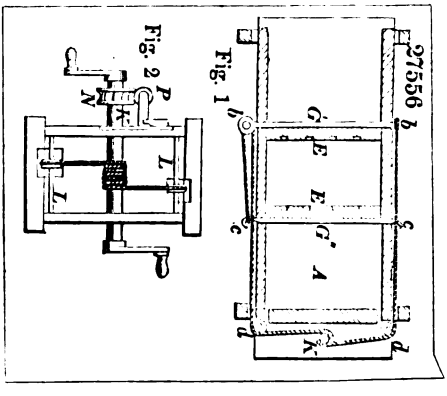

27557

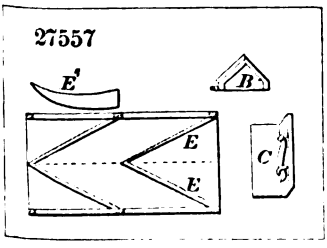

27558

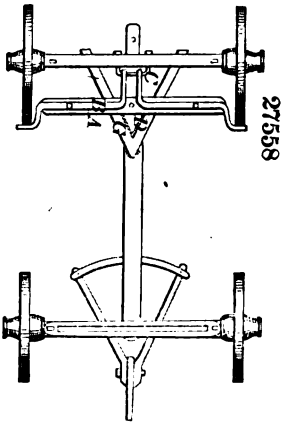

27559

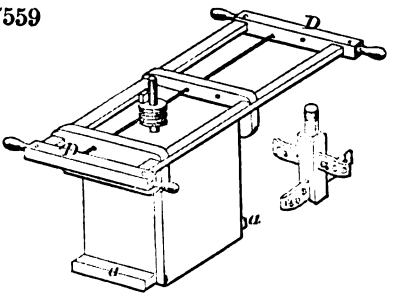

27560

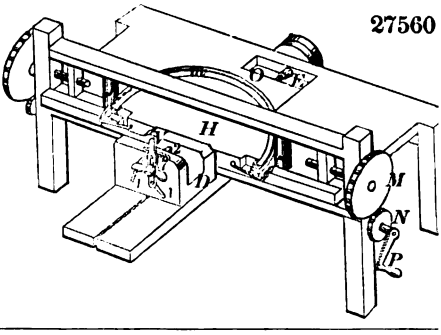

27561

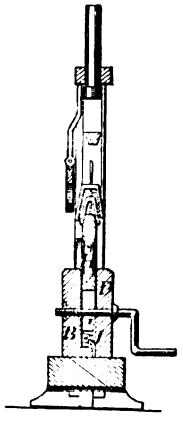

27562

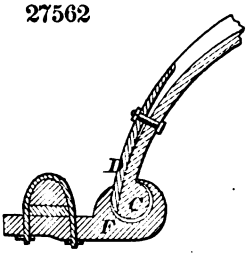

27565

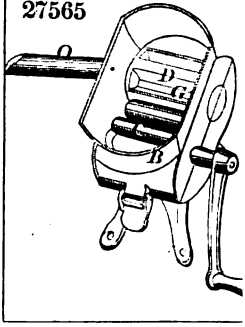

27567

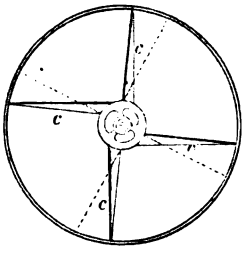

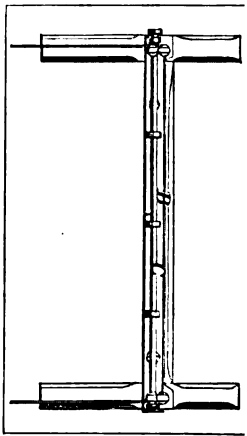

27568

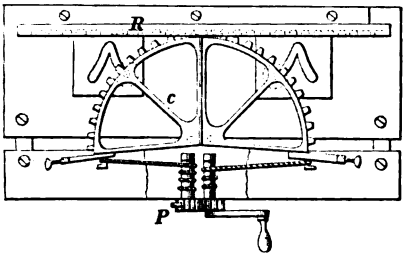

27570

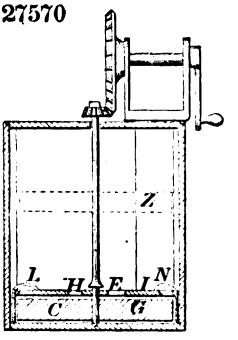

27571

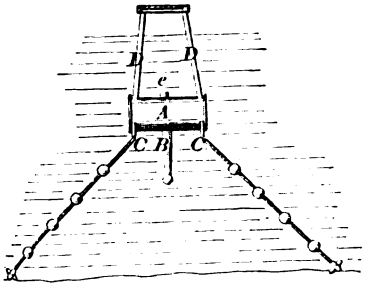

27572

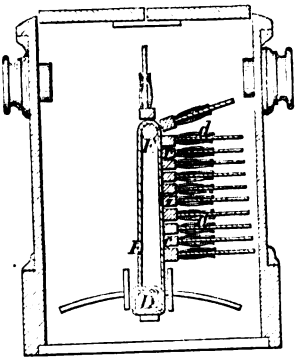

27573

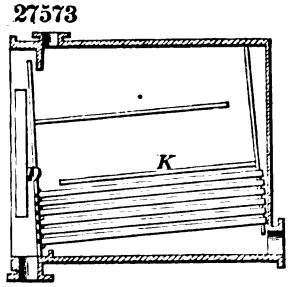

27574

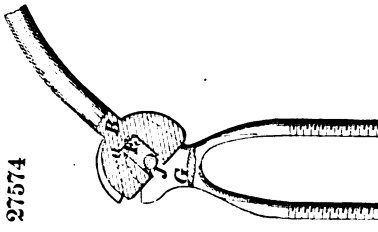

27575

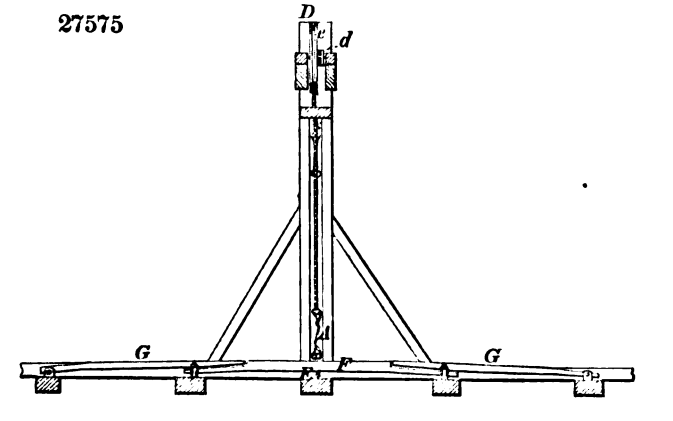

27576

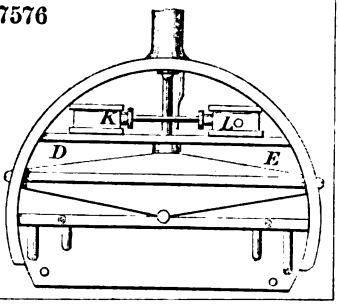

27577

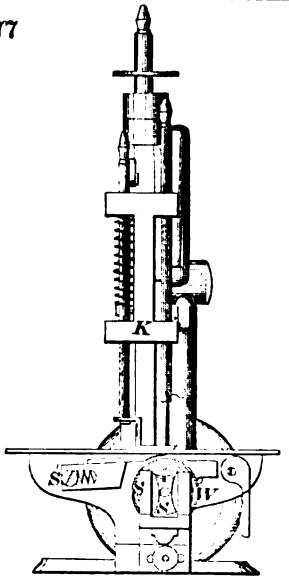

27578

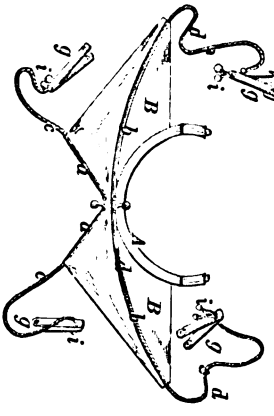

27579

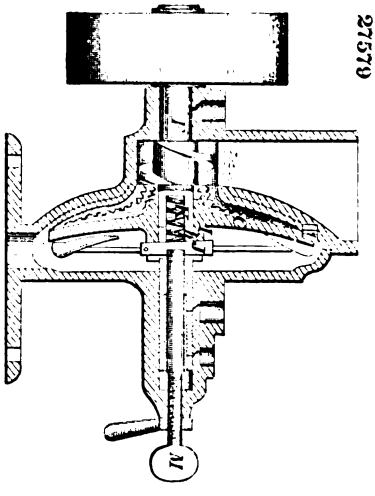

27580

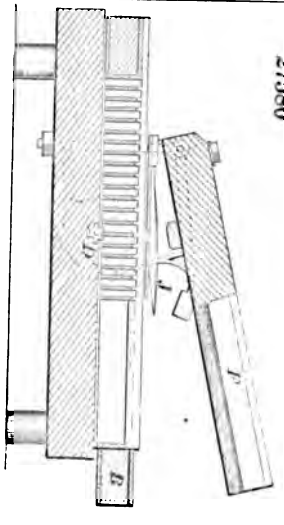

27581

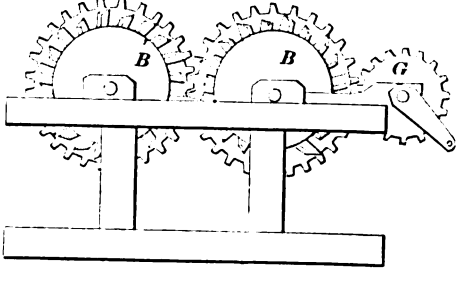

27582

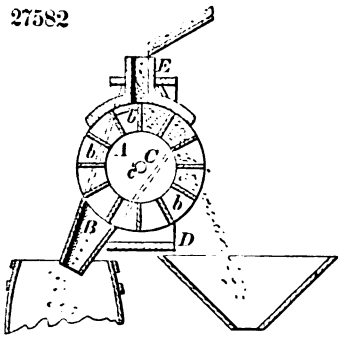

27583

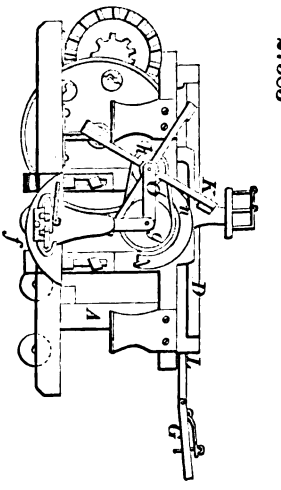

27584

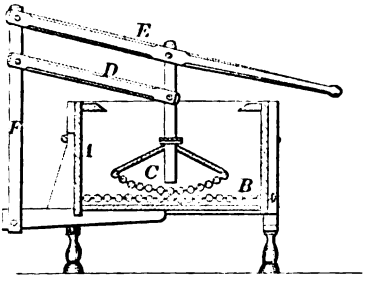

27585

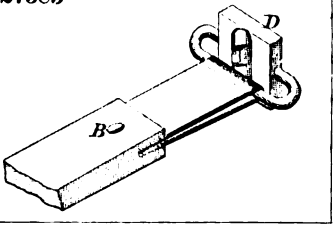

27586

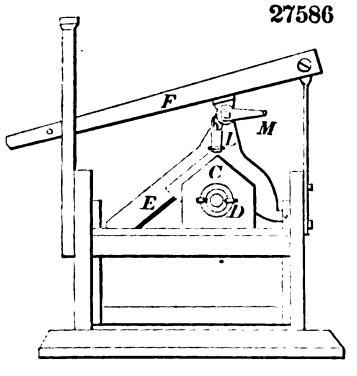

27587

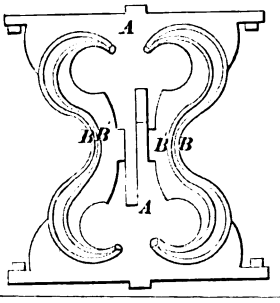

27588

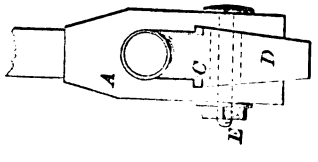

27589

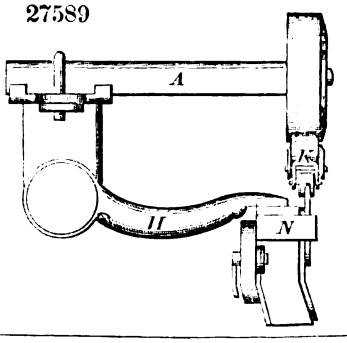

27591

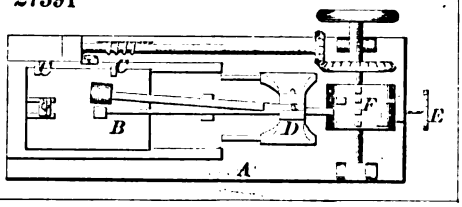

27592

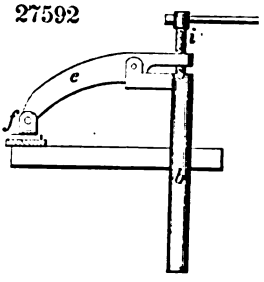

27593

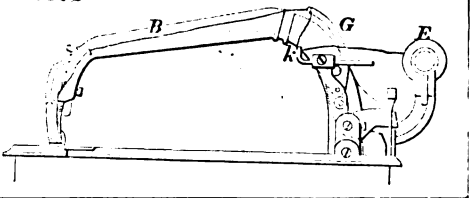

27594

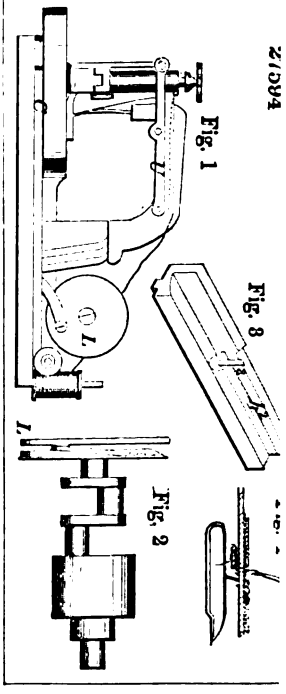

27595

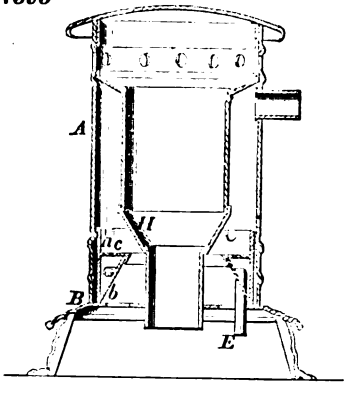

27596

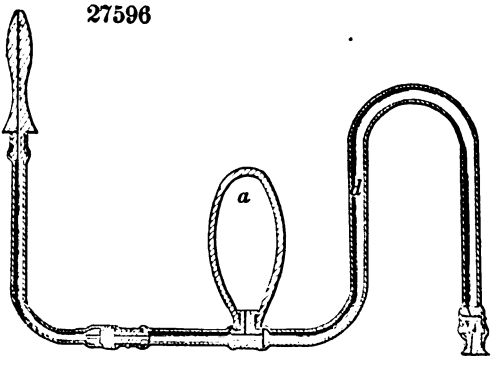

27597

27598

27599

27600

27601

27602

27603

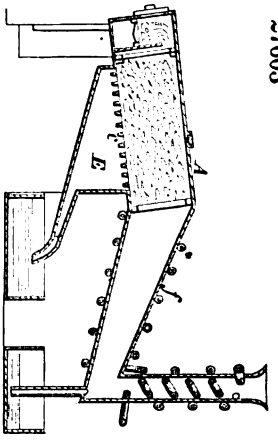

27604

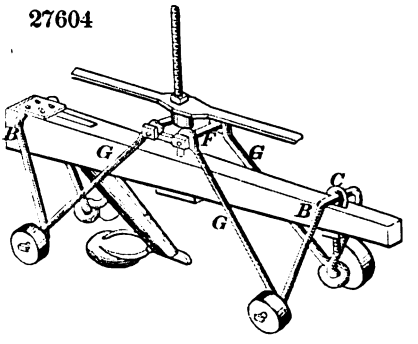

27606

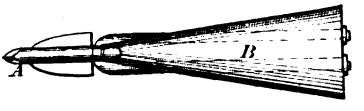

27607

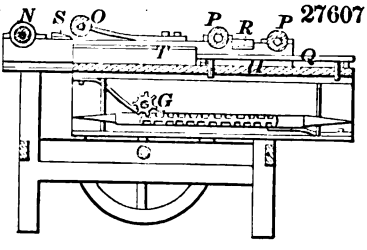

27608

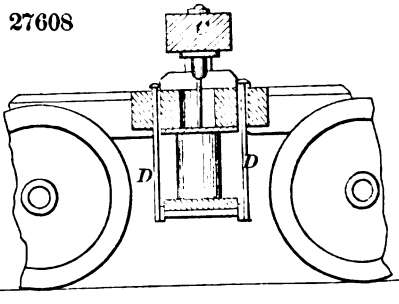

27609

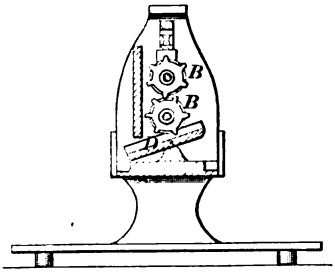

27610

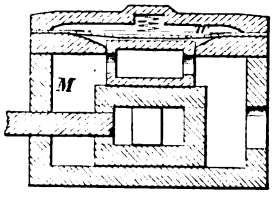

27611

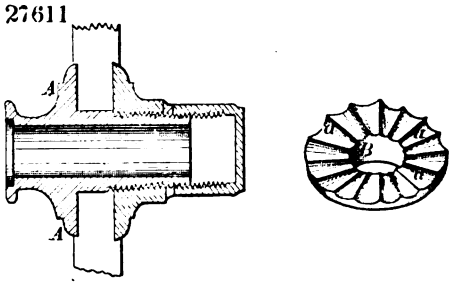

27612

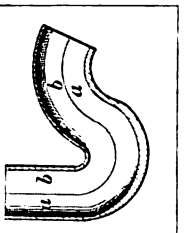

27613

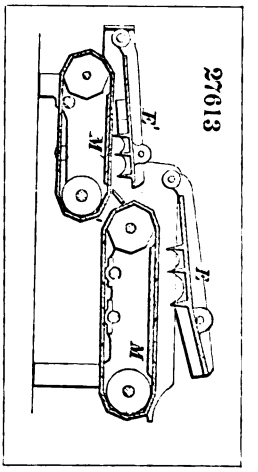

27614

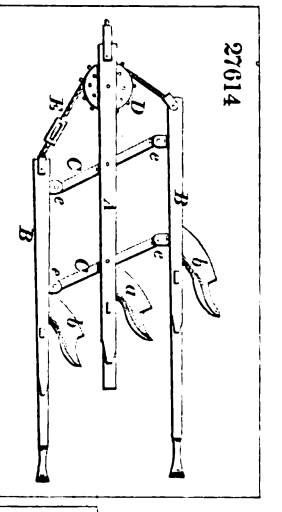

27615

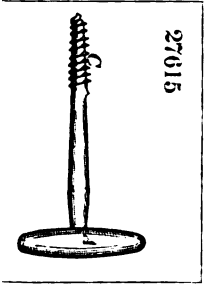

27616

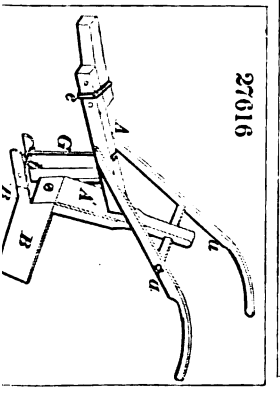

27617

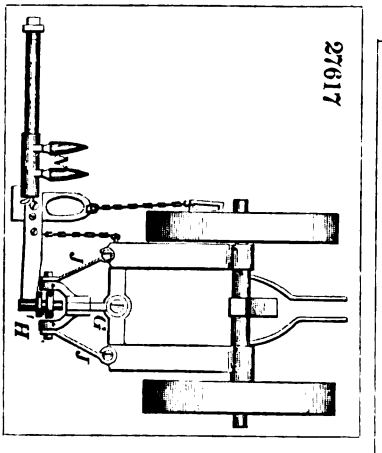

27618

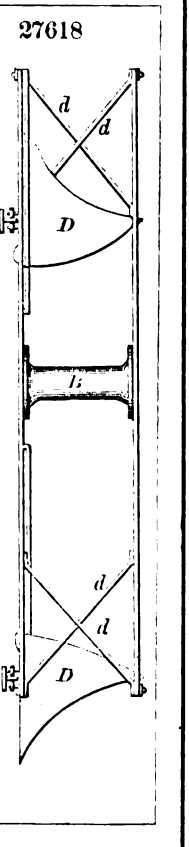

27619

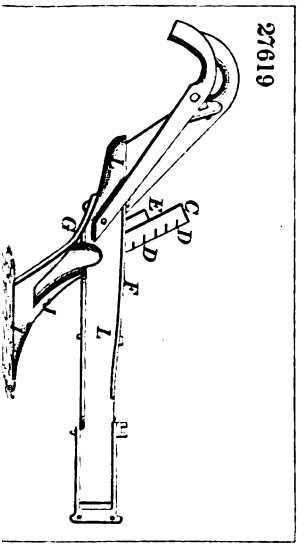

27620

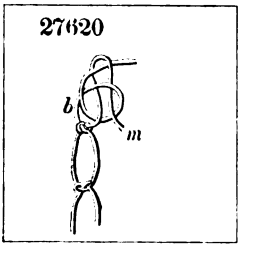

27621

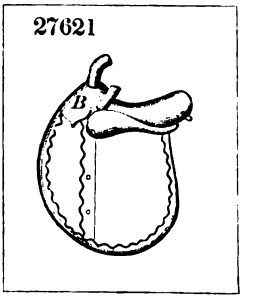

27622

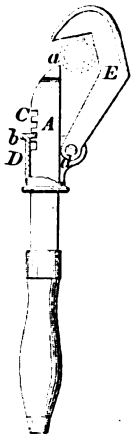

27623

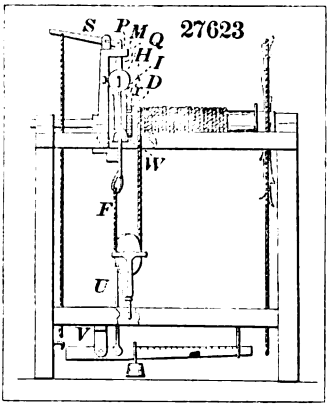

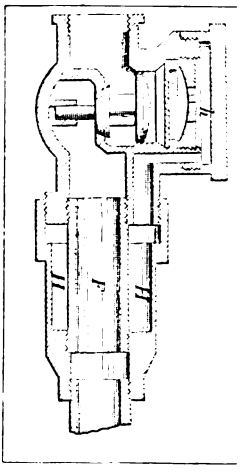

27626

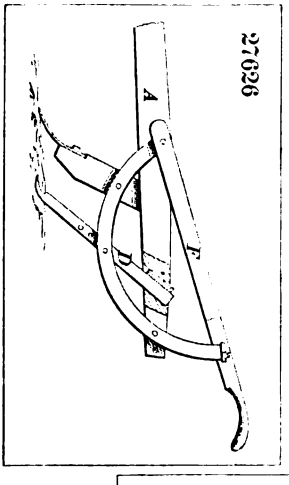

27627

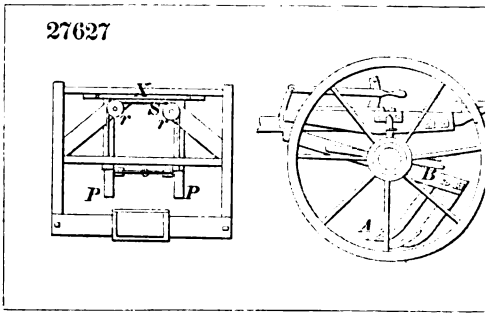

27628

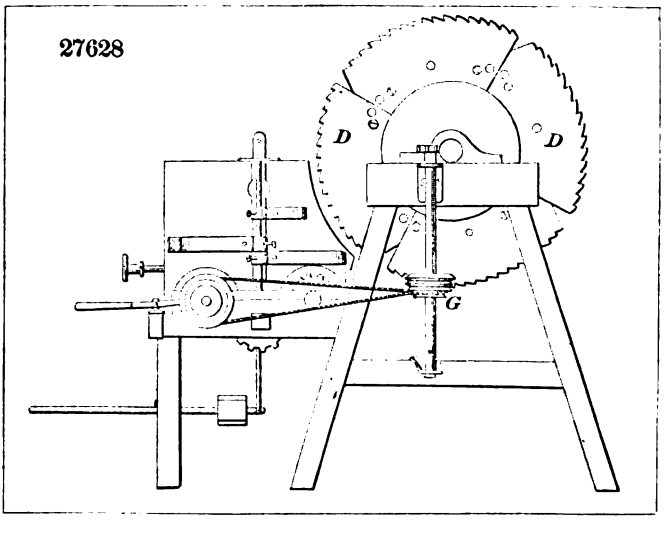

Fig. 1

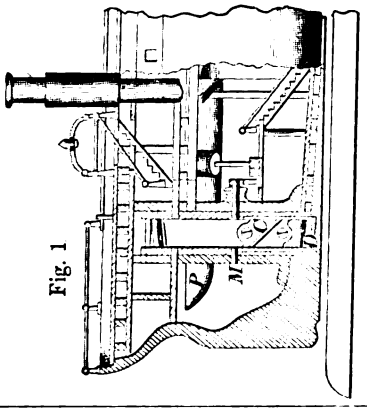

Fig. 2

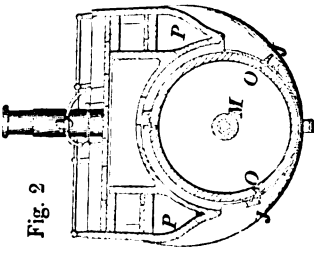

630

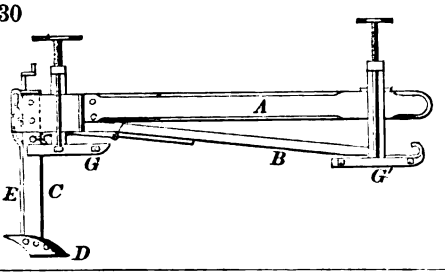

27631

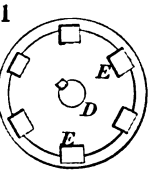

27632

Fig. 1

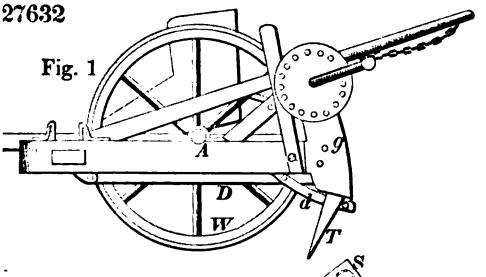

Fig. 2

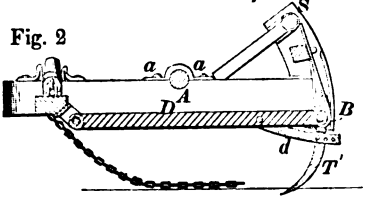

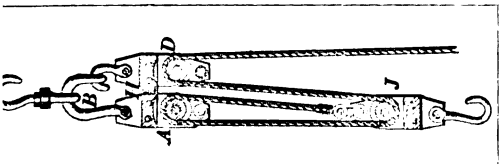

27634

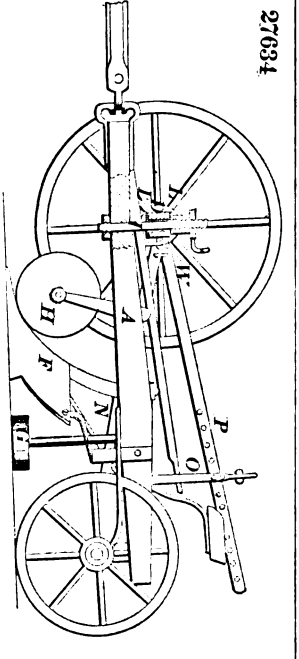

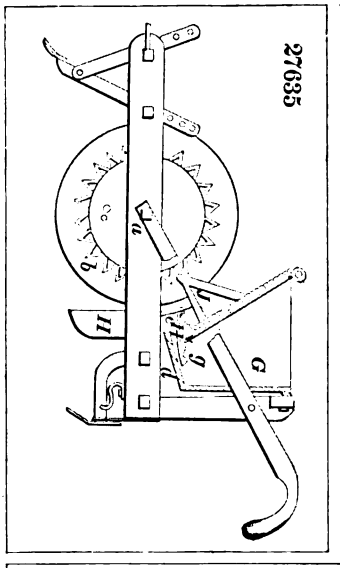
27635

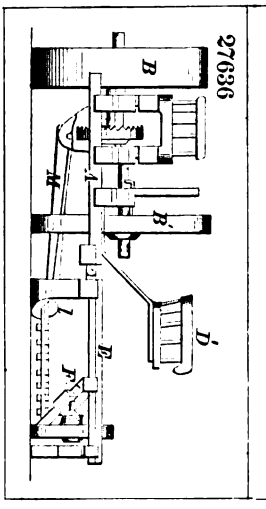
27636

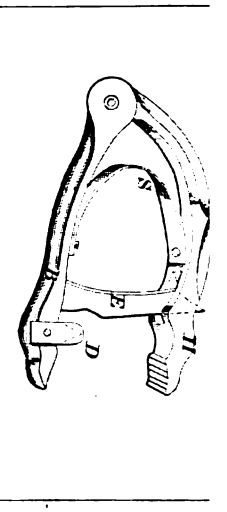

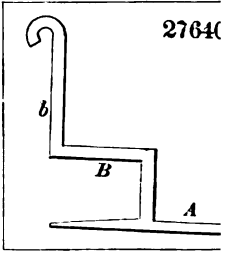
27640

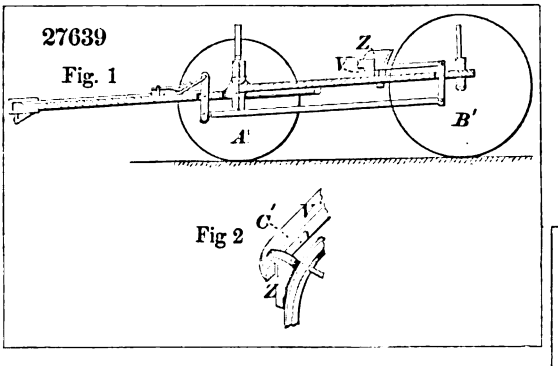
27639
Fig. 1
Fig 2

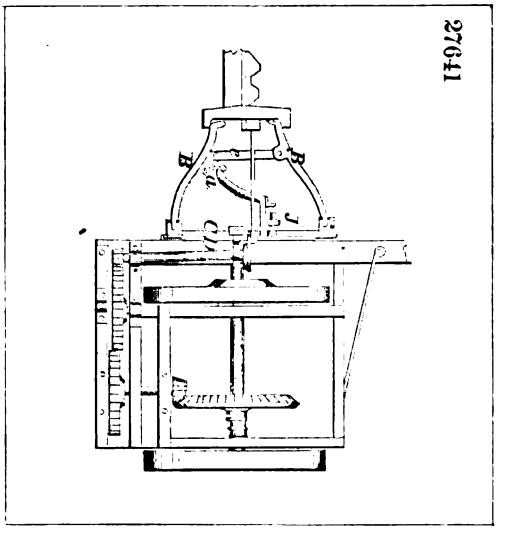
27641

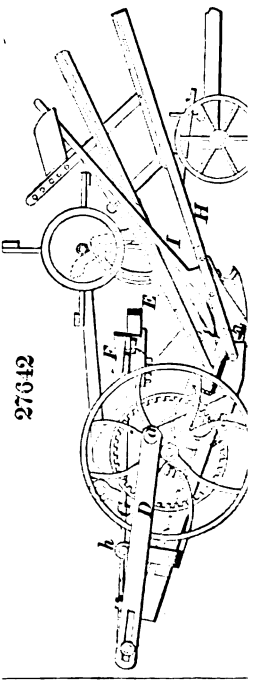
27642

27643

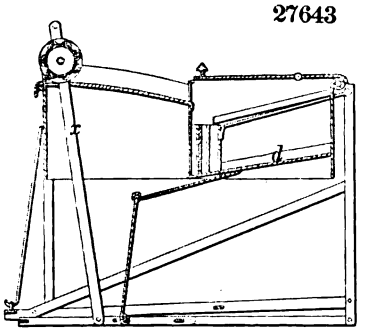

27644

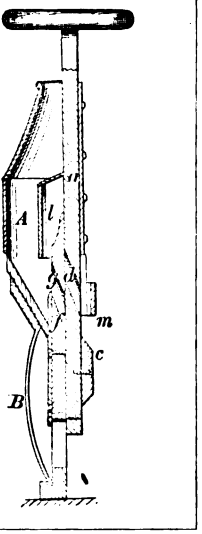

27645

Fig. 1

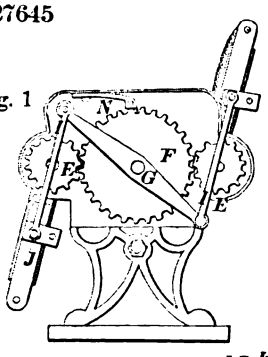

Fig. 2

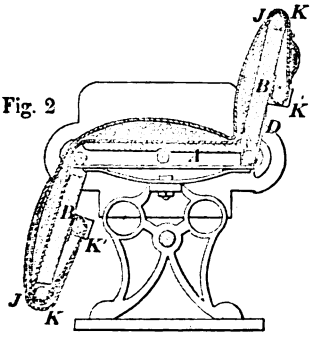

27647

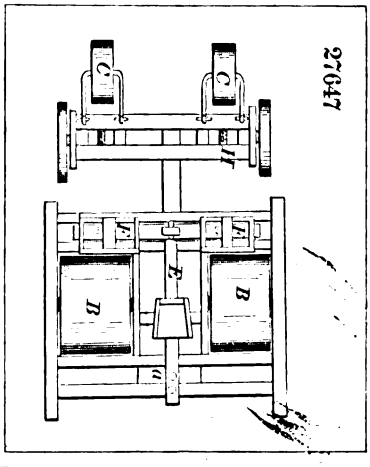

27649

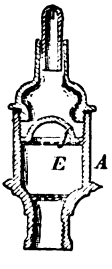

27650

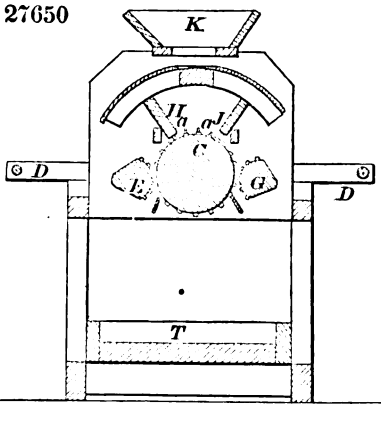

27651

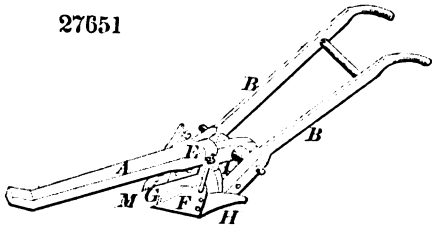

27654

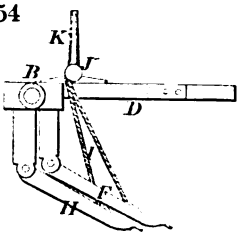

27652

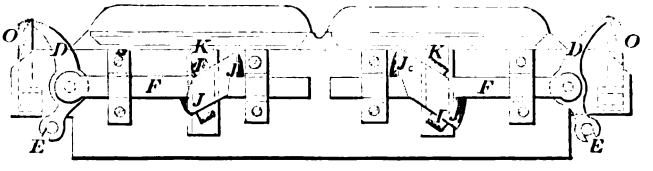

27655

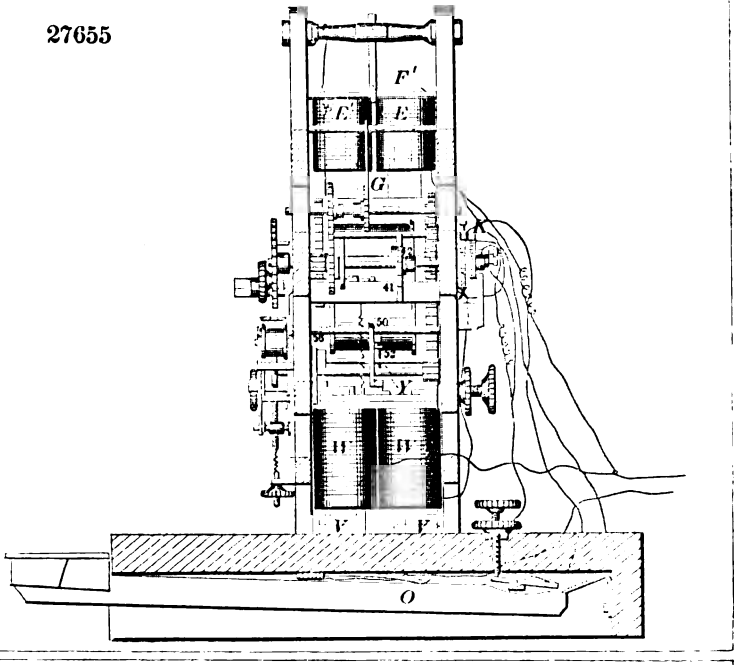

27656

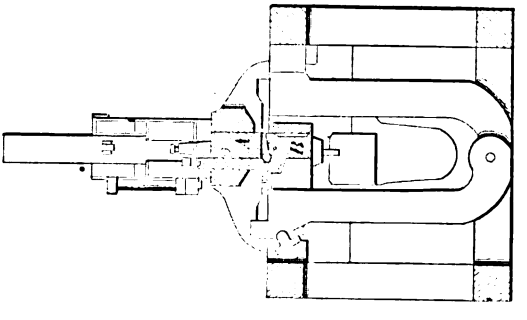

27657

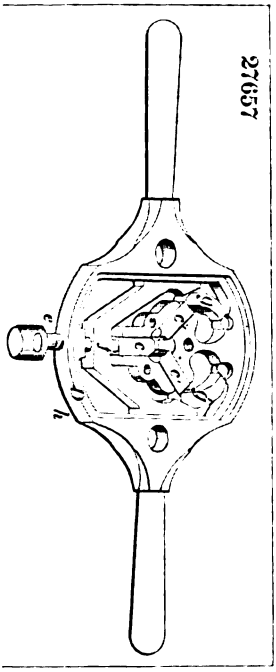

27658

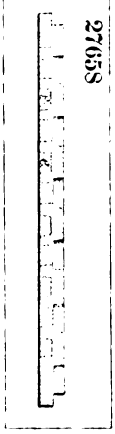

27659

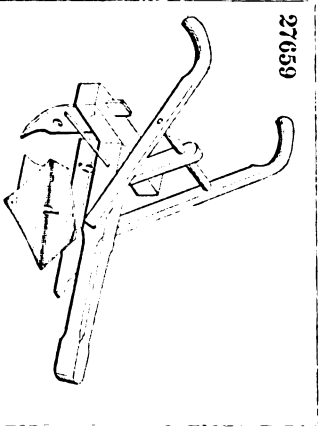

27660

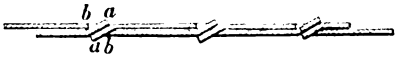

27661

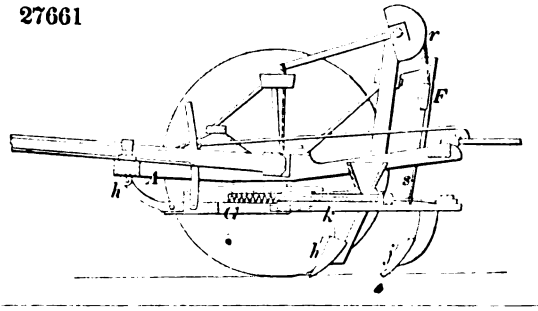

27663

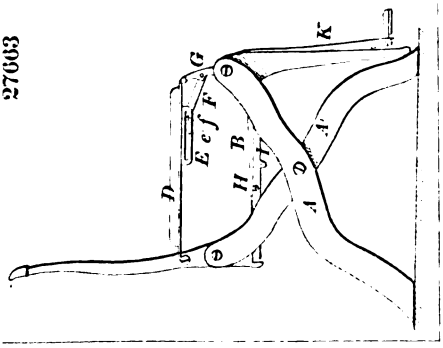

27662

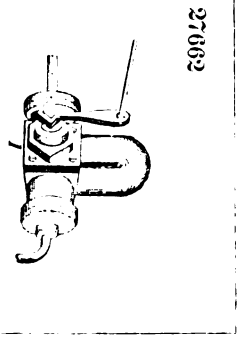

27664

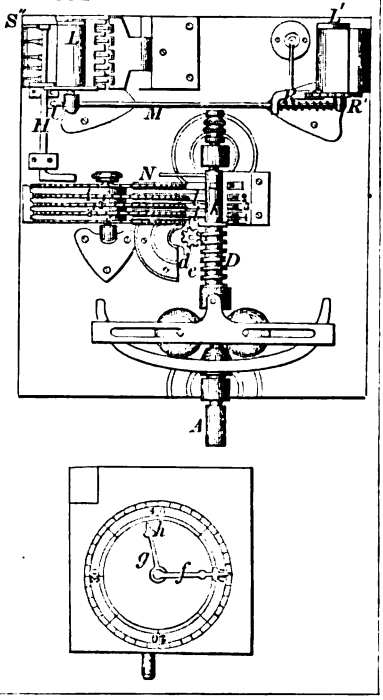

27665

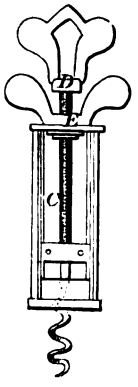

27666

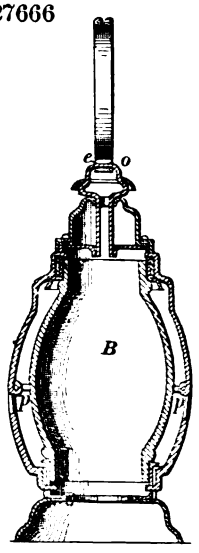

27667

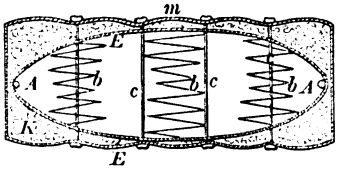

27668

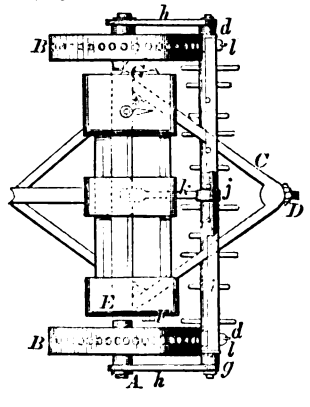

27670

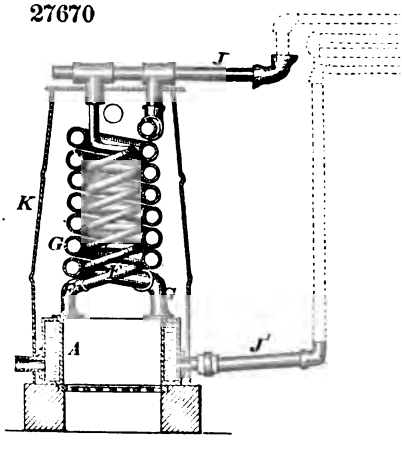

27669

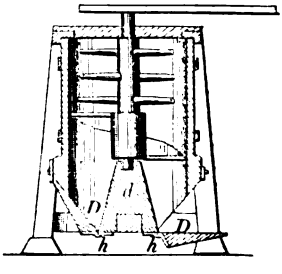

27671

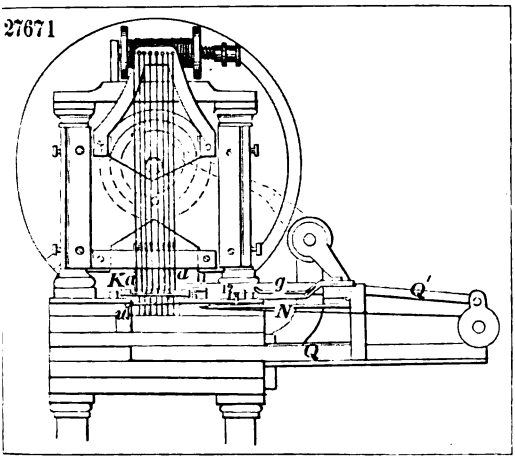

27672

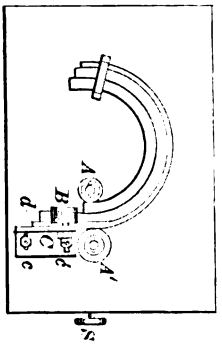

27673

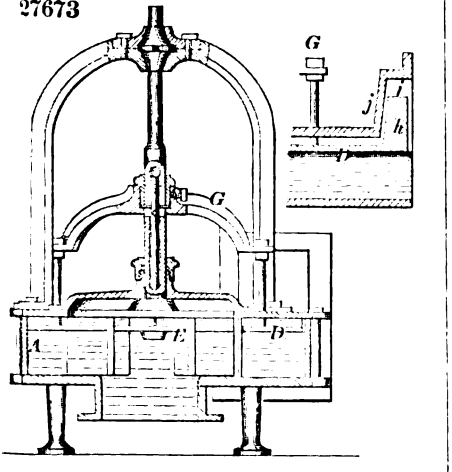

27674

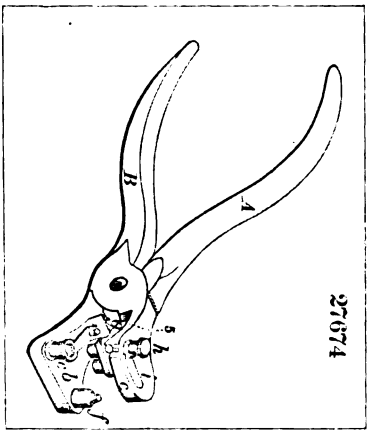

27675

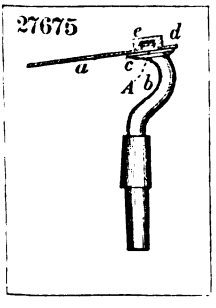

27676

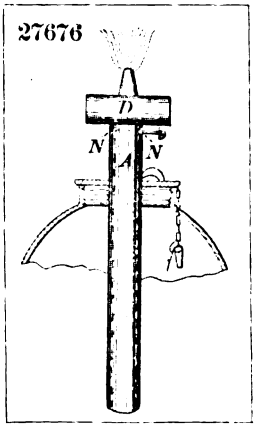

27677

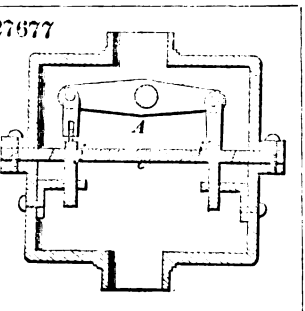

27678

27679

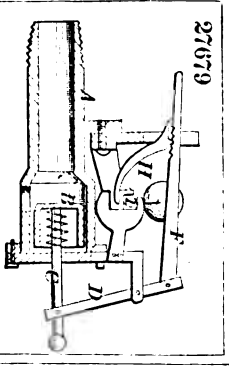

27680

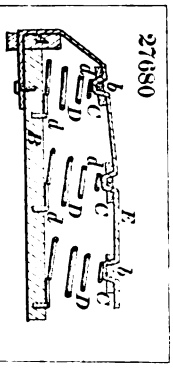

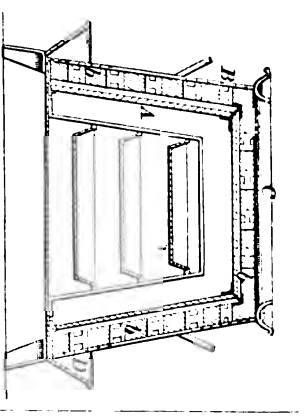

27682

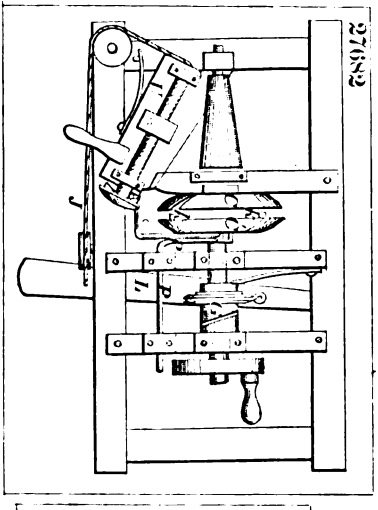

27683

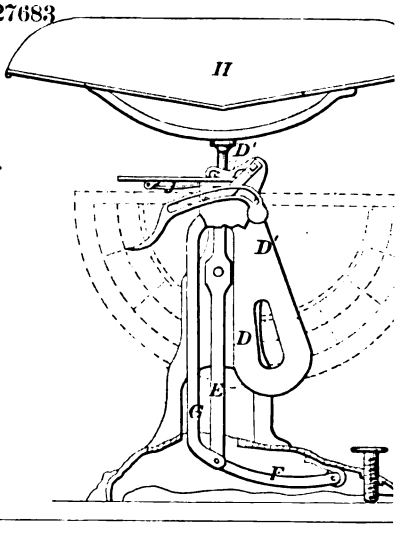

27684

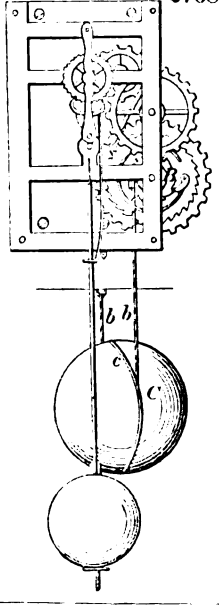

27685

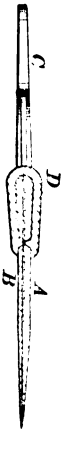

27686

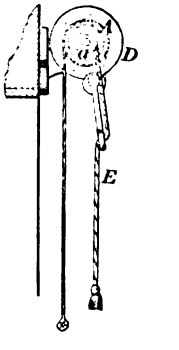

27687

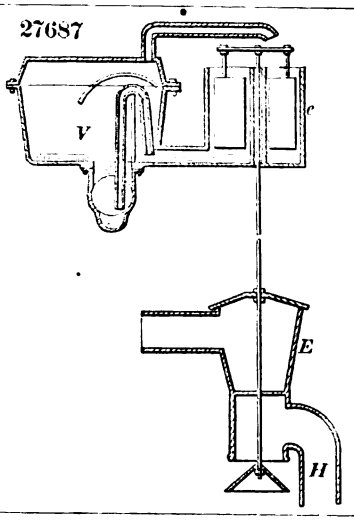

27688

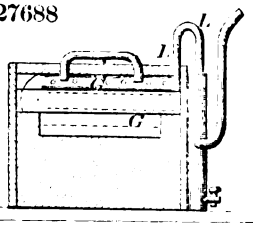

27690

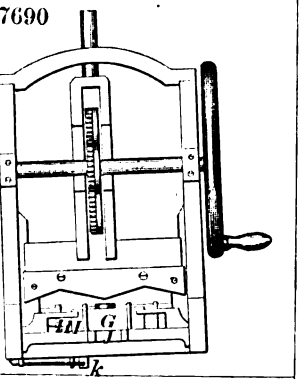

27691

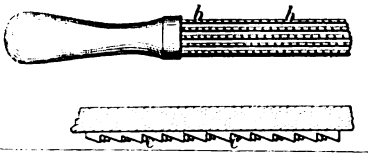

27694

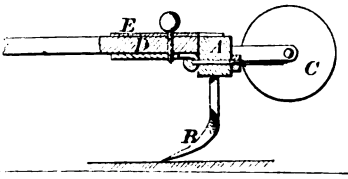

27695

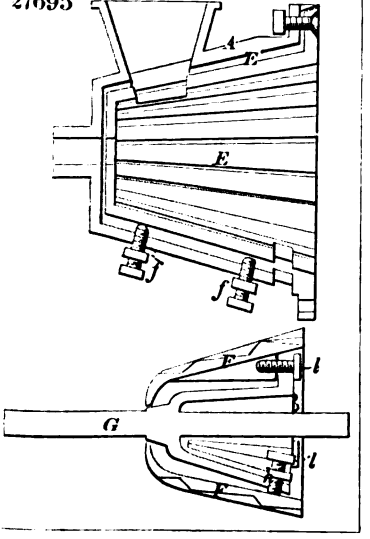

27693

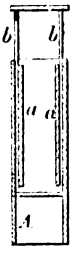

27692

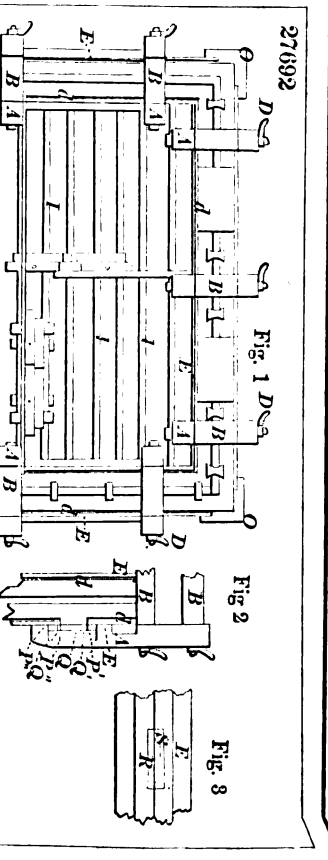

27696

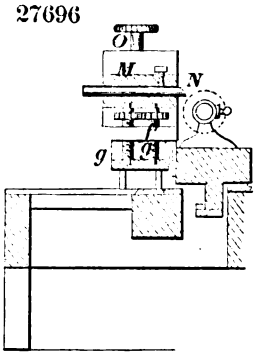

27697

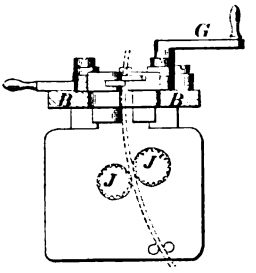

27698

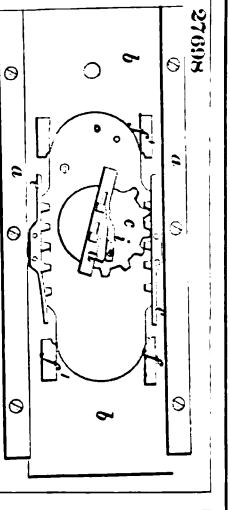

27699

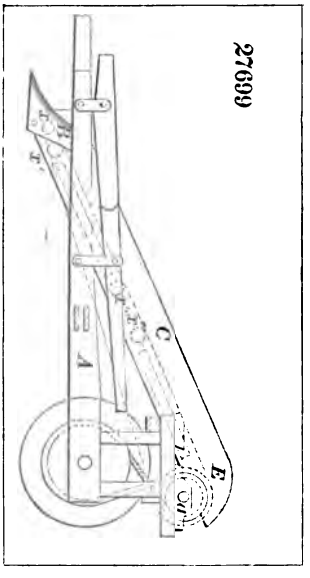

27700

27701

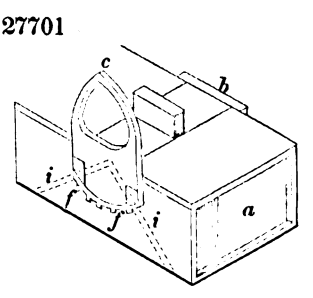

27702

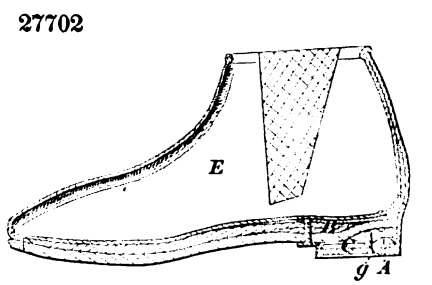

27703

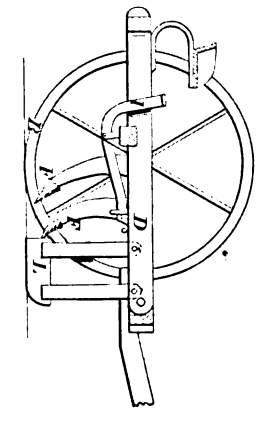

27704

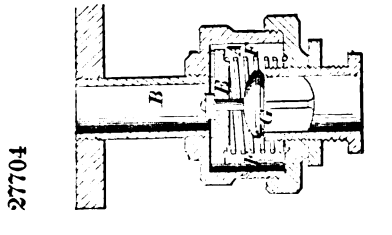

'705

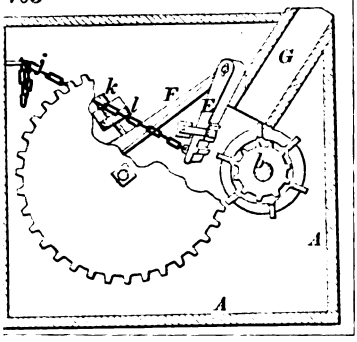

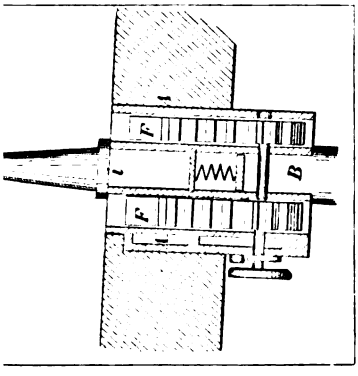

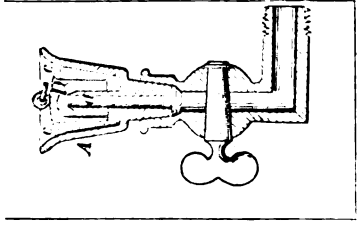

'713

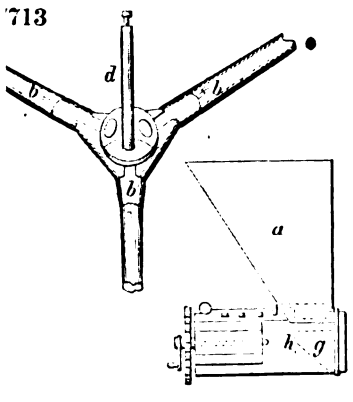

27708

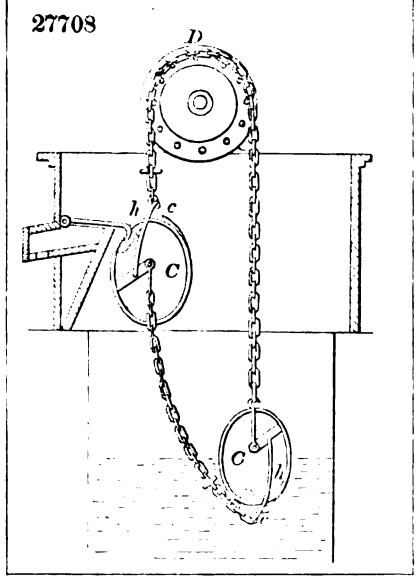

27710

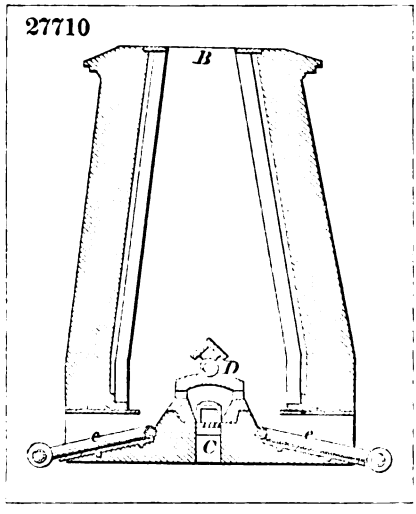

27712

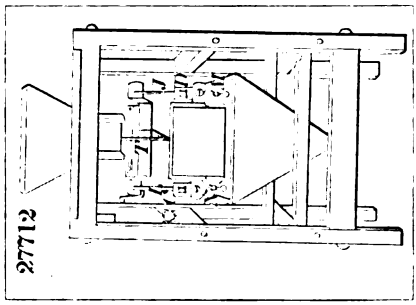

27714

27715

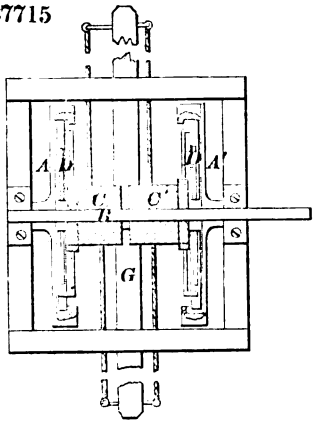

27718

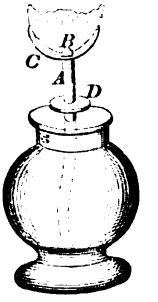

27720

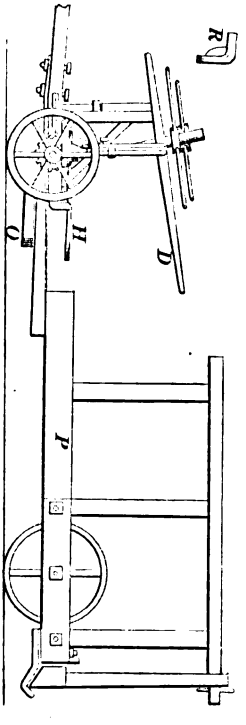

27719

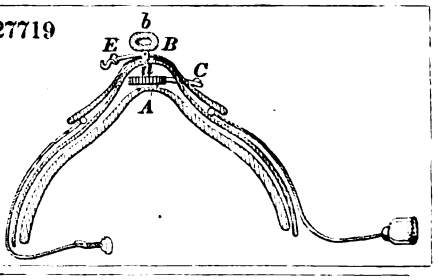

27721

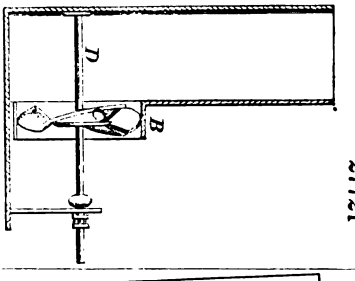

27722

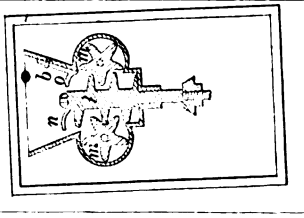

27723

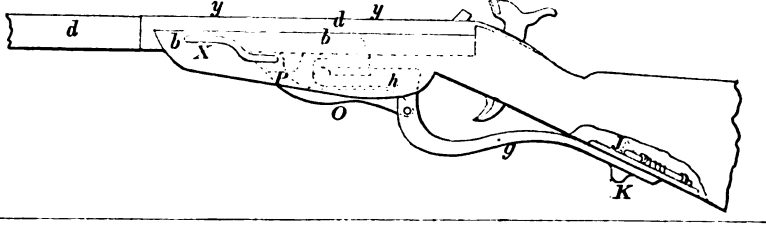

27724

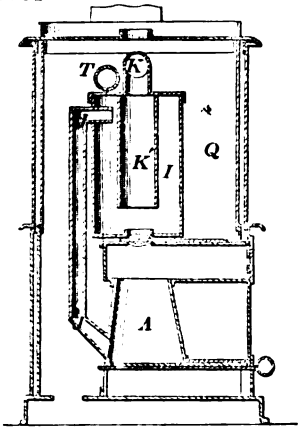

27725

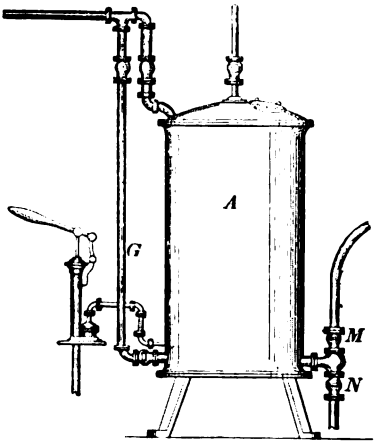

27726

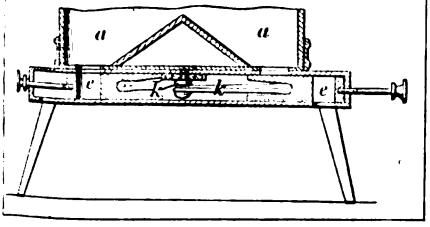

27728

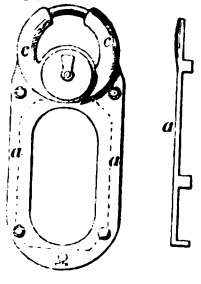

27729

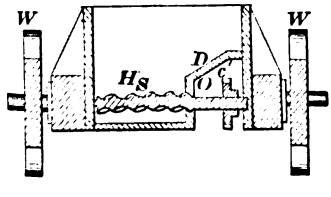

27727

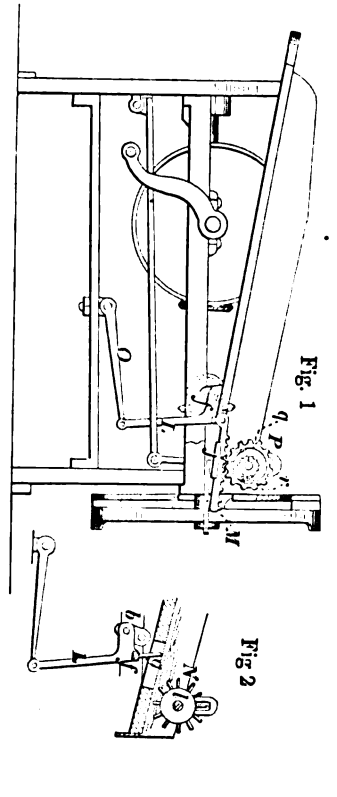

Fig. 1

Fig. 2

27730

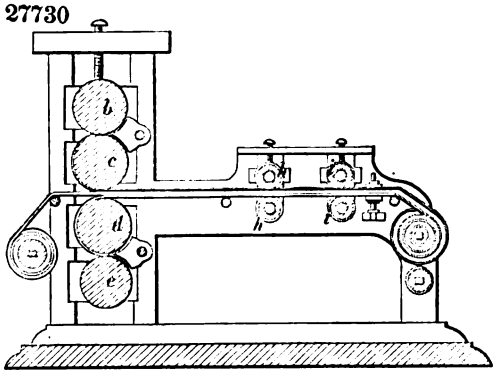

27731

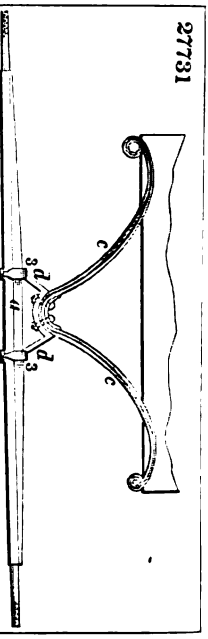

27732

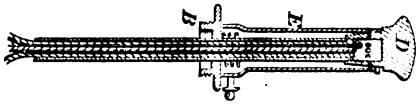

27733

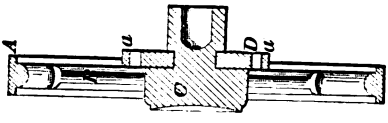

27734

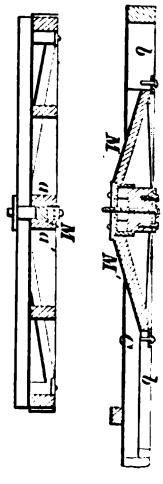

27735

Fig. 1

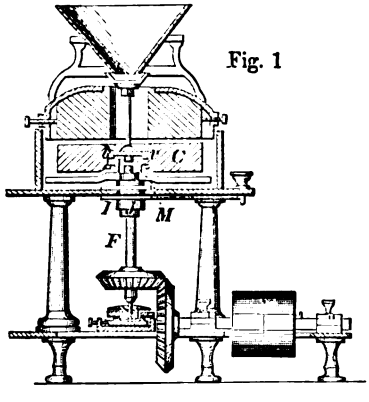

Fig 2

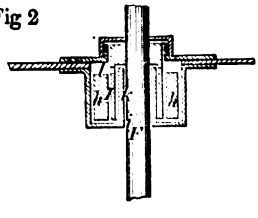

27736

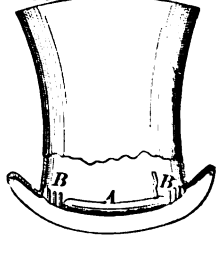

737

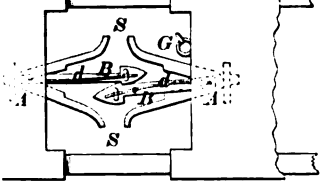

27738

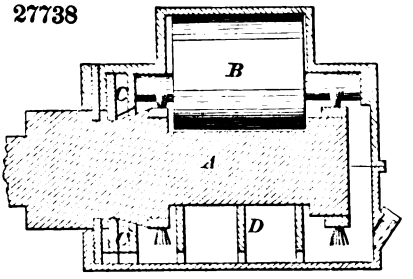

7741

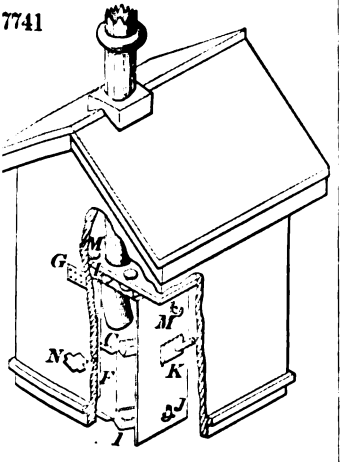

27740

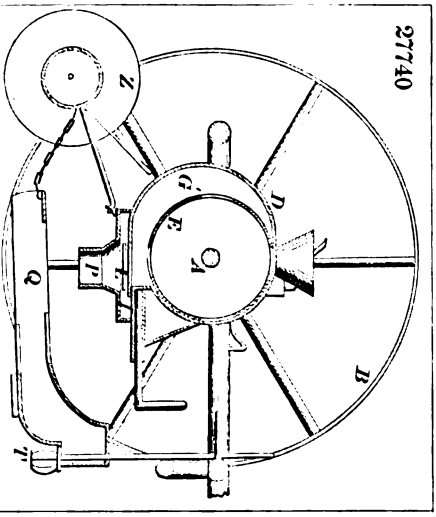

27742

Fig. 1

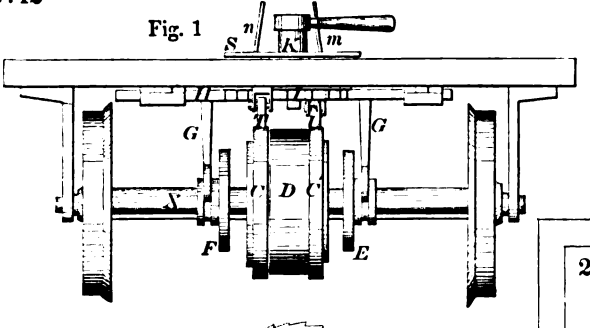

Fig 2

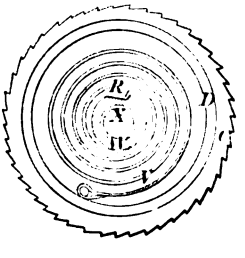

27739

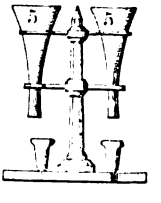

27743

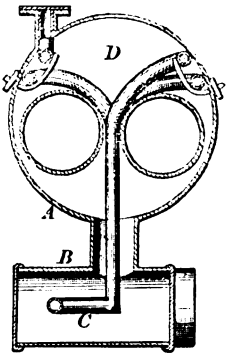

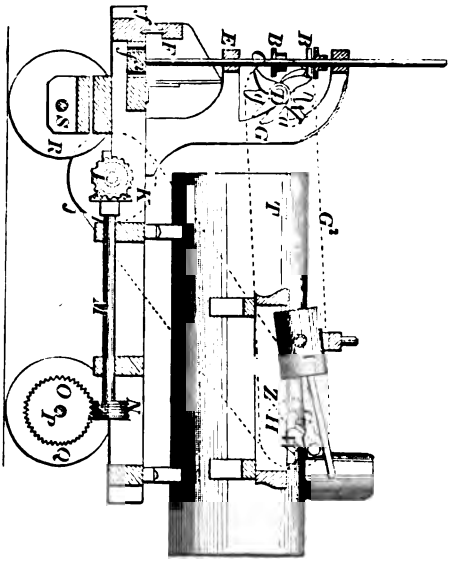

27745

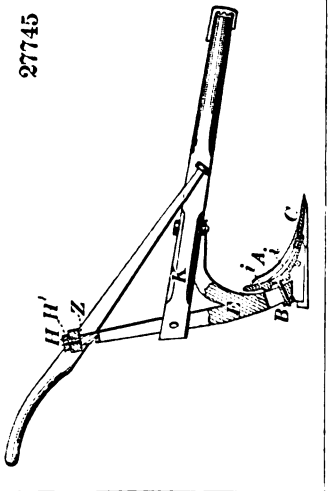

27746

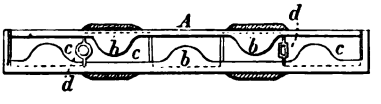

27747

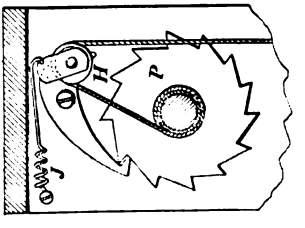

27749

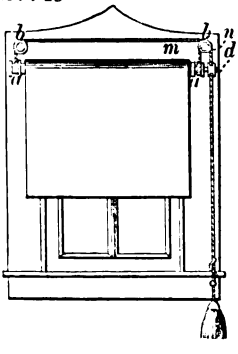

27748

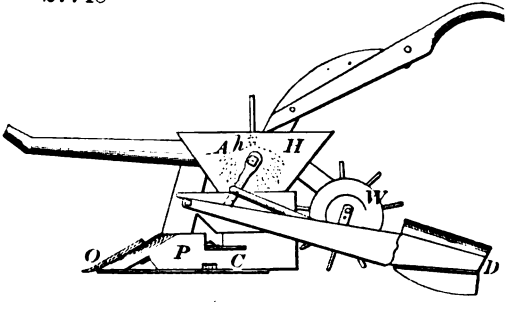

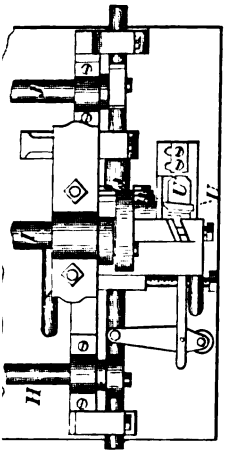

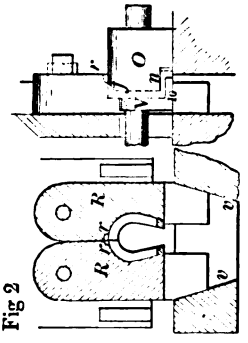

Fig 2

27751

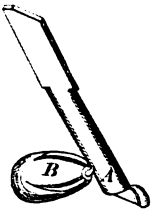

752

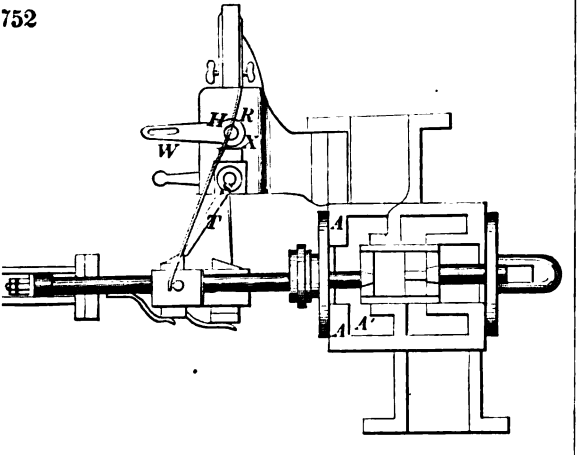

27755

27753

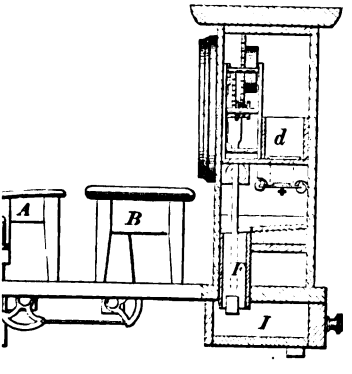

Fig 2

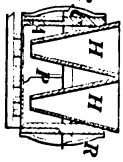

27754

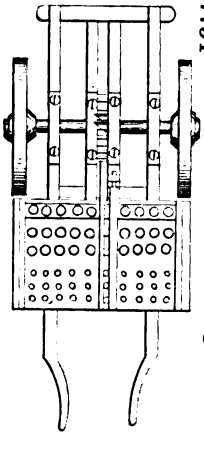

Fig. 1

27756

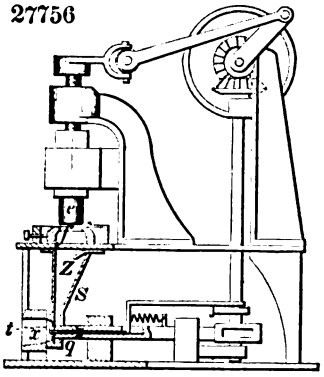

27757

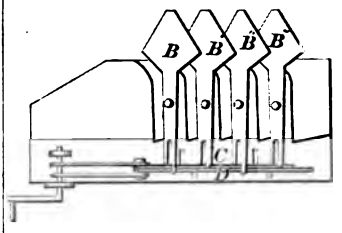

27758

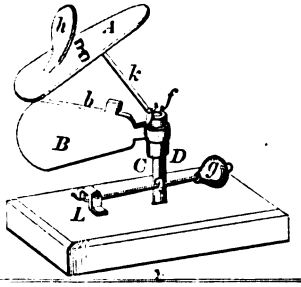

27759

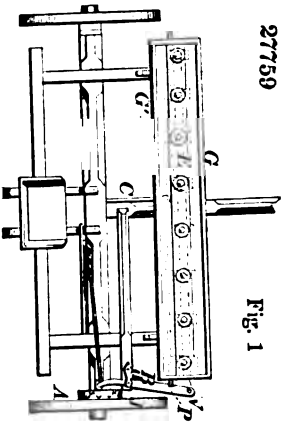

Fig. 1

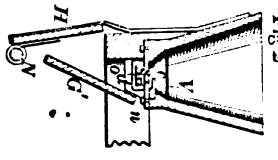

Fig. 2

27760

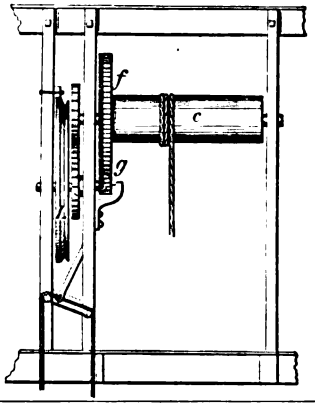

27761

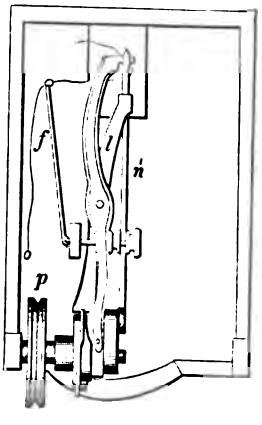

27762

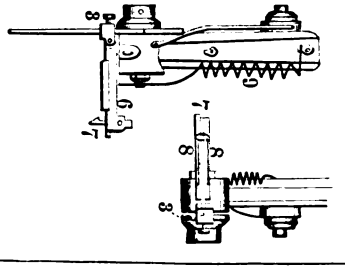

27763

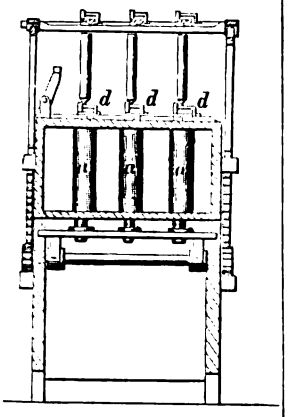

27764

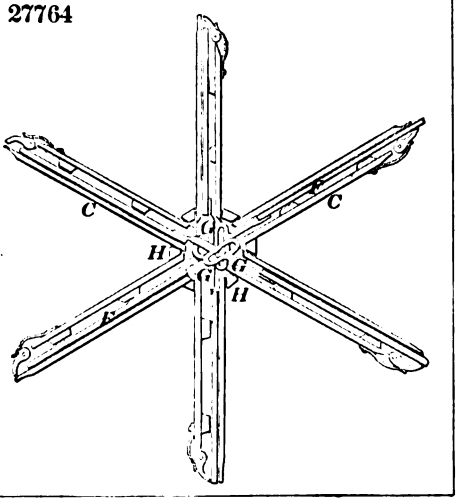

27765

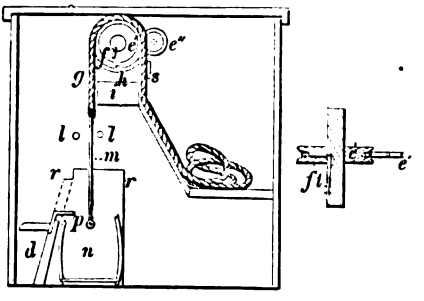

27767

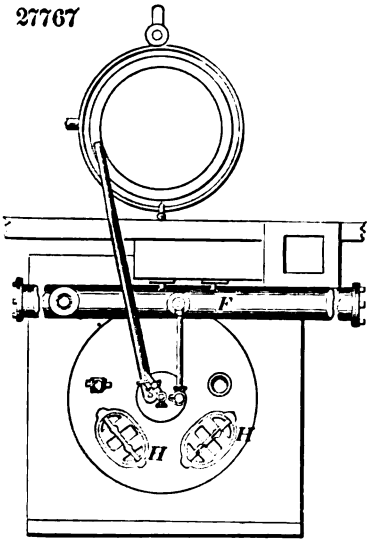

27766

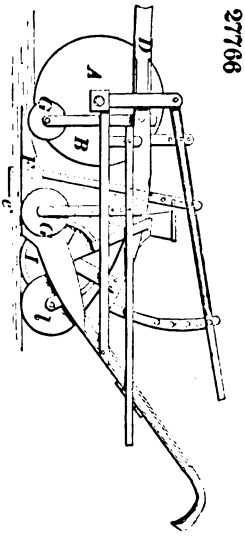

27768

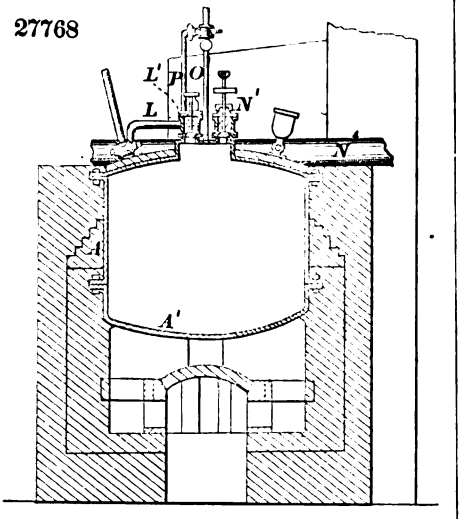

27769

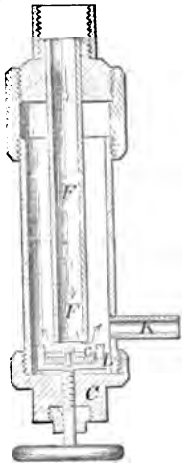

27771

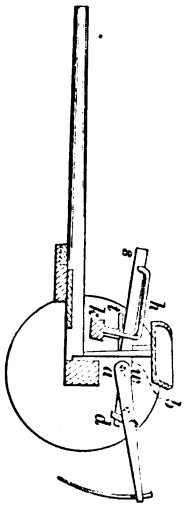

27772

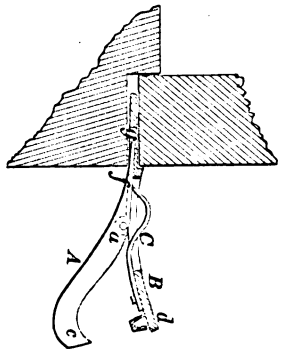

27773

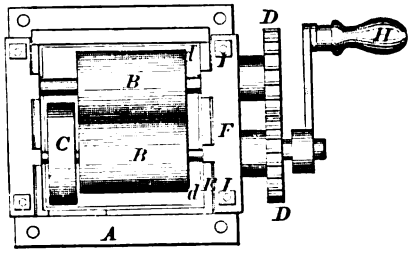

27774

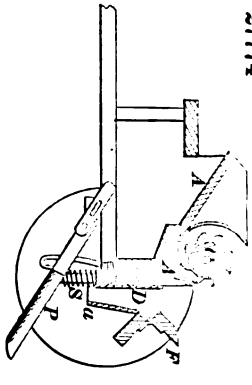

7775

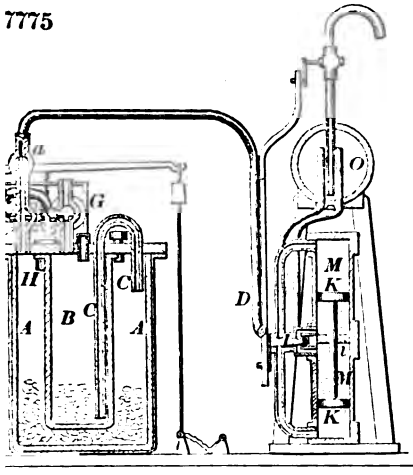

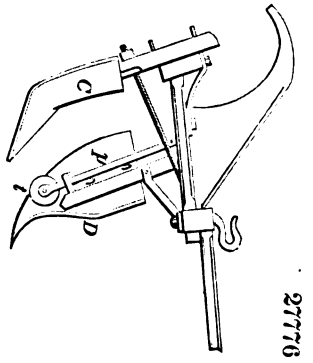

27777

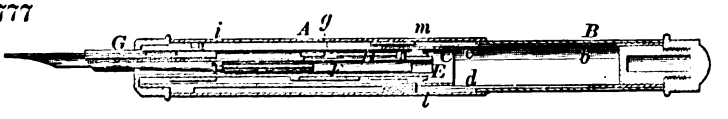

7778

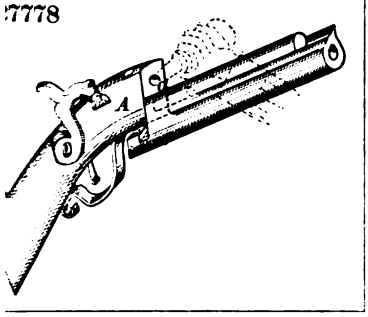

27779

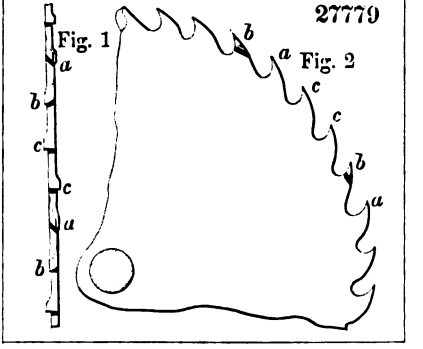

780

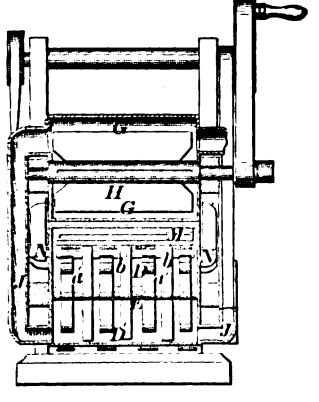

27781

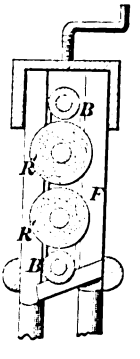

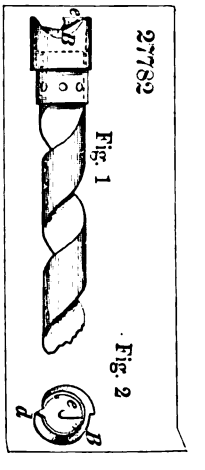

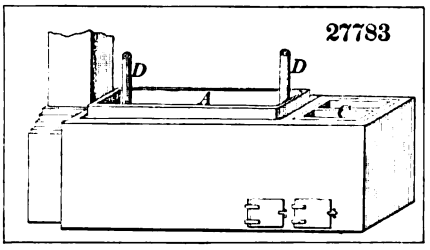
27783
D
D
A
C

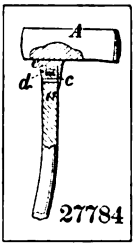
A
d
c
27784

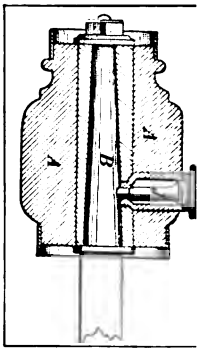
A
B

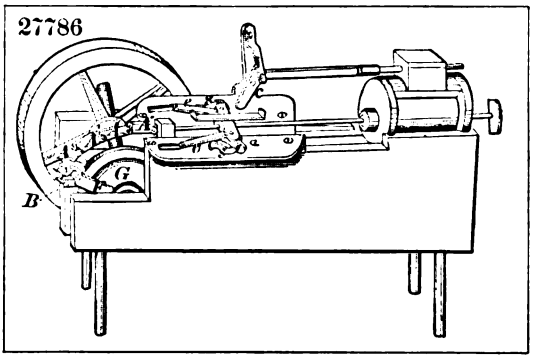
27786
G
B

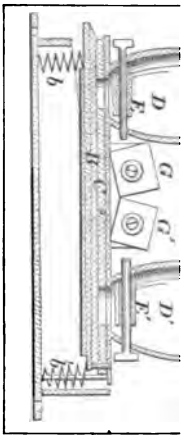
b
D
F
G
G'
D'
F'

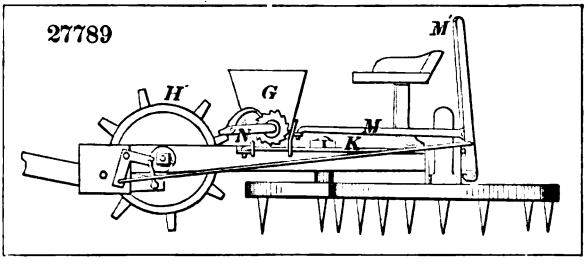
27789
M'
H'
G
M
N
K

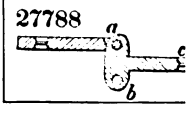
27788
a
b

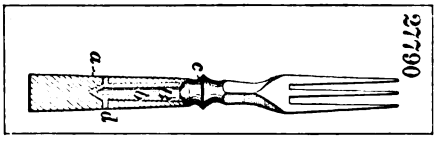
27790
a
c
d

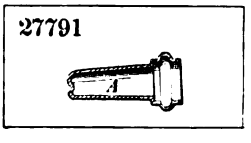
27791
A

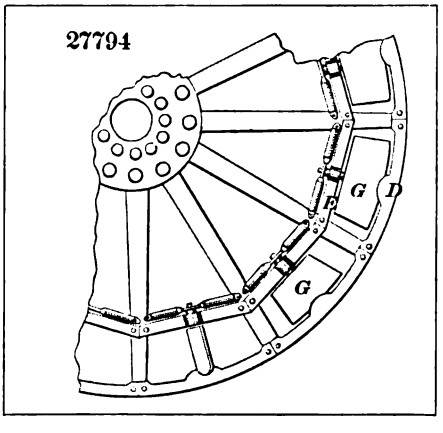
27794
F
G
D
G

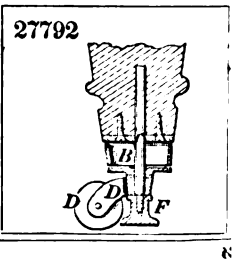
27792
B
D
D
F

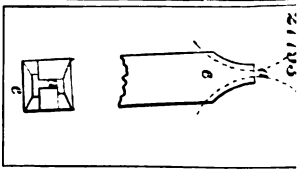
e
e

27795

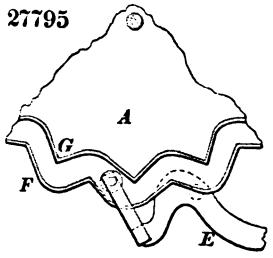

27796

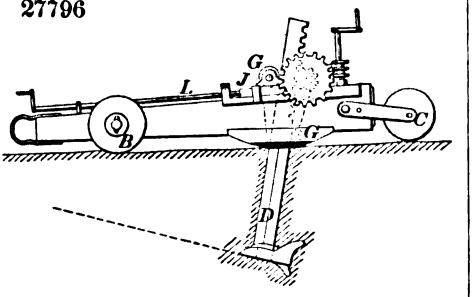

27797

Fig. 1

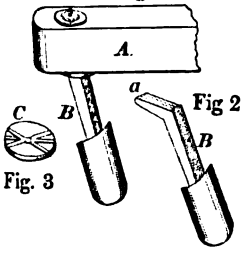

Fig 2

Fig. 3

27799

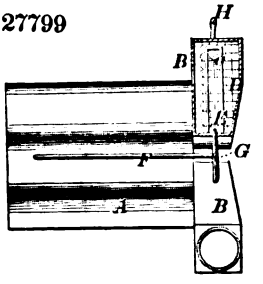

27800

27801

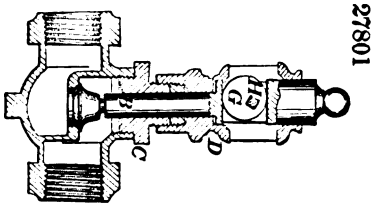

27802

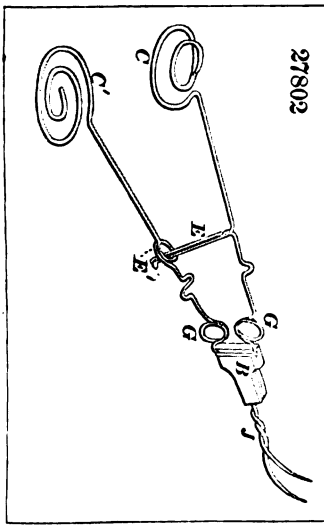

27803

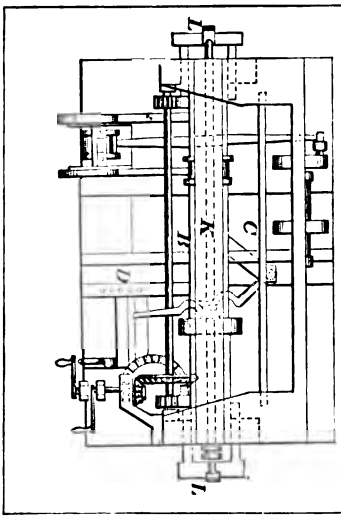

27804

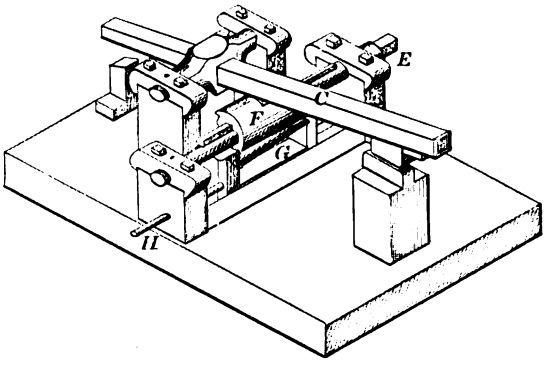

27805

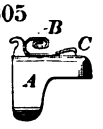

27806

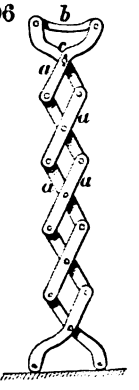

27807

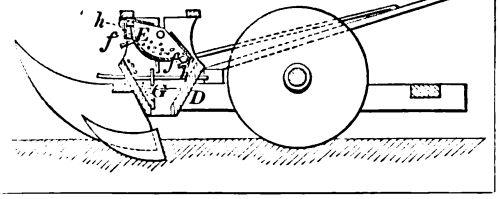

27808

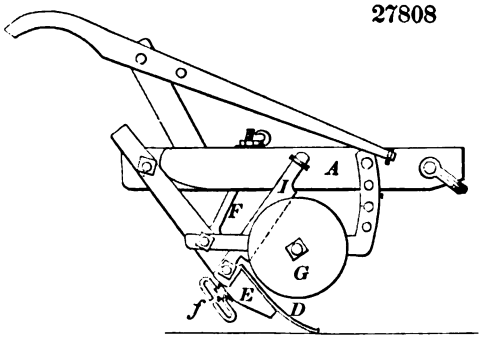

27809

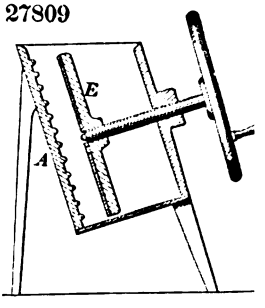

27810

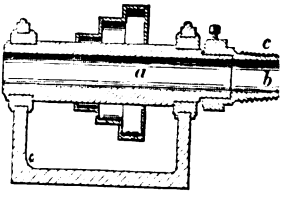

27811

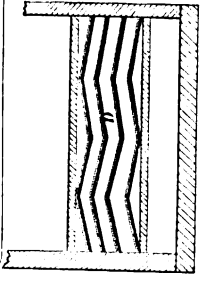

27812

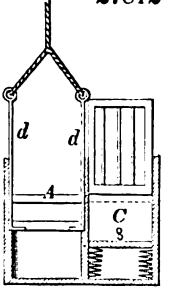

27813

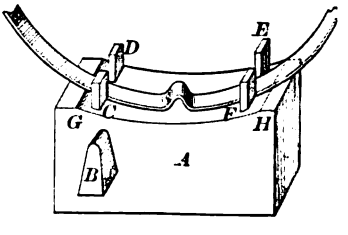

27814

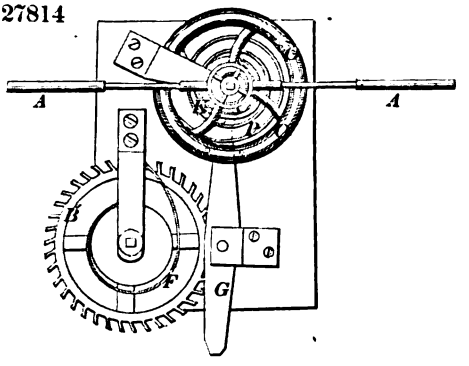

27815

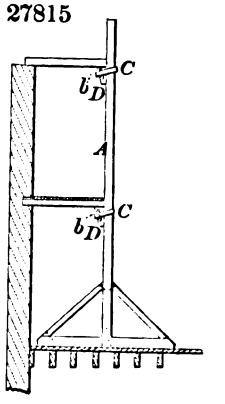

27816

Fig. 1

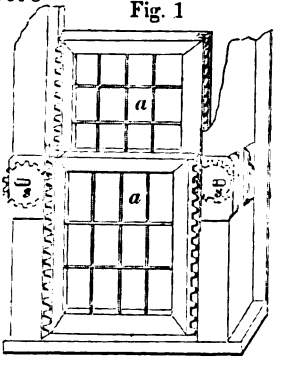

Fig 2

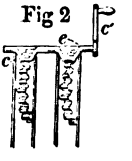

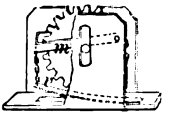

Fig. 3

27818

27820

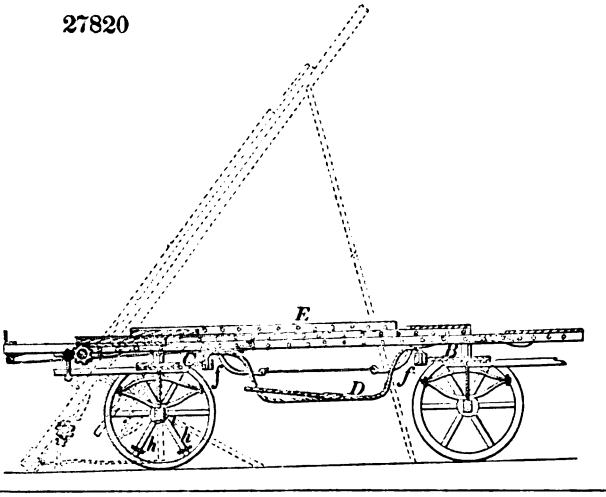

27819

27821

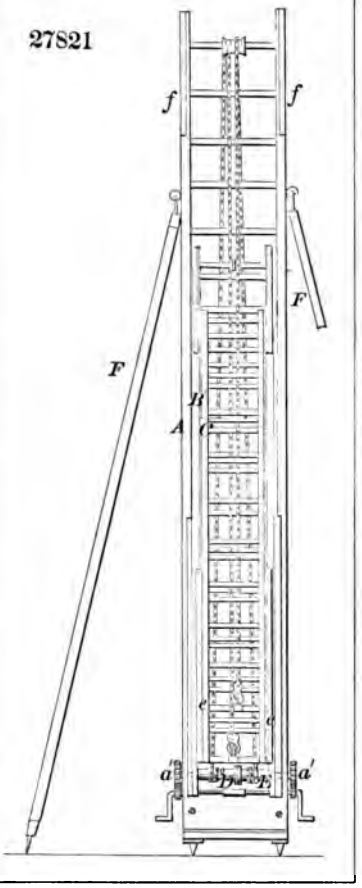

27822

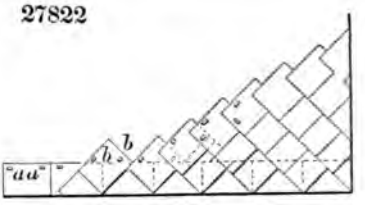

27824

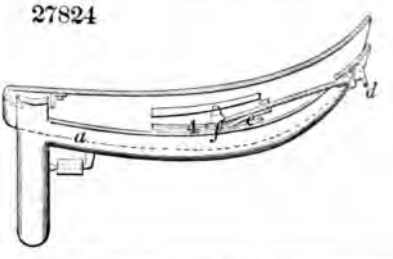

27825

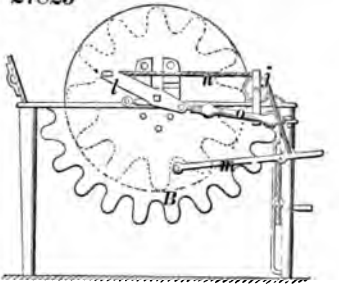

27826

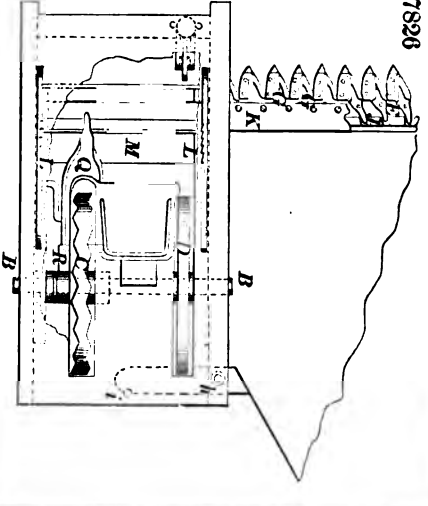

27827

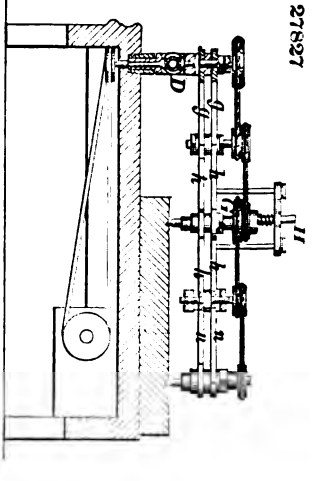

27828

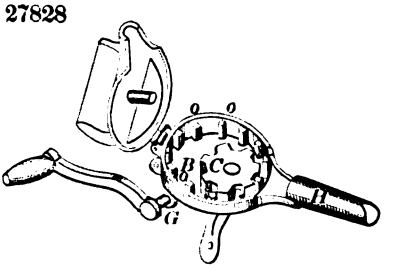

27829

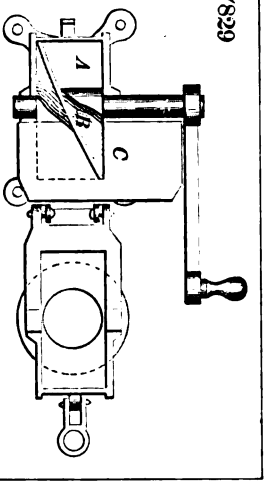

27830

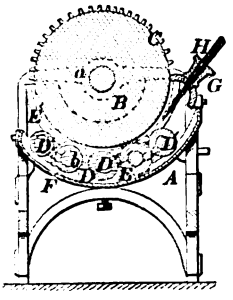

27831

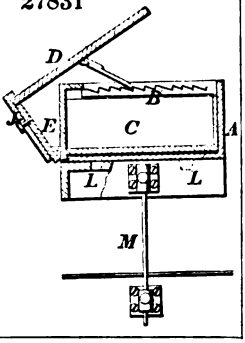

27832

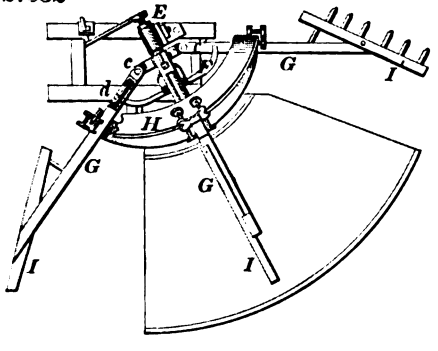

27833

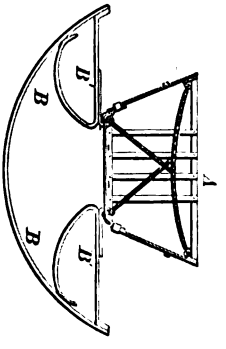

27834

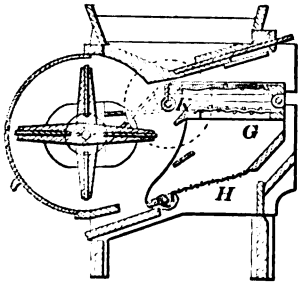

27836

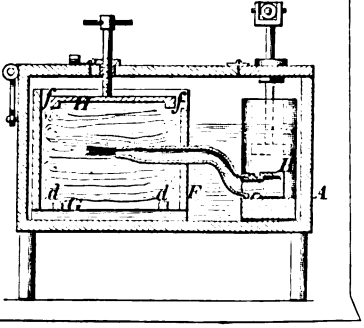

27838

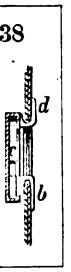

27839

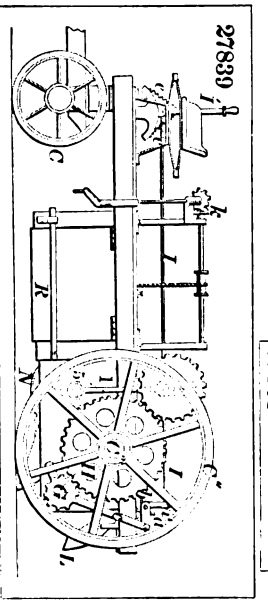

27840

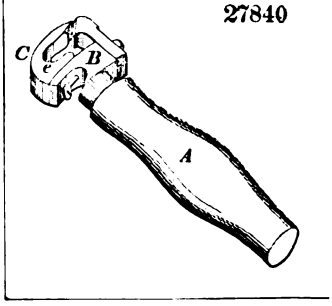

27842

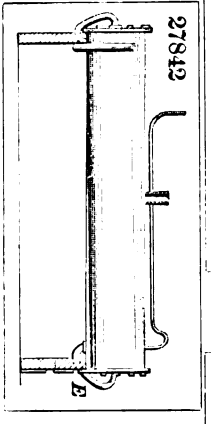

27841

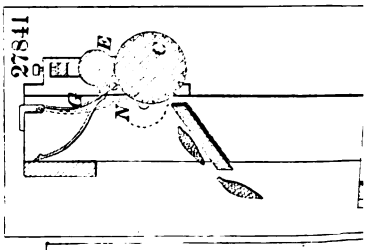

27844

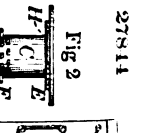

Fig 2

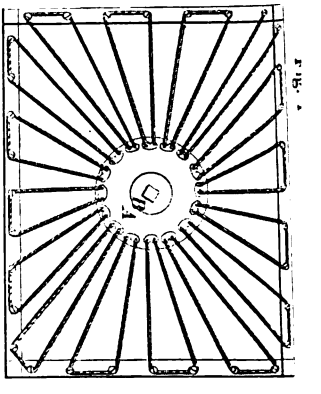

27843

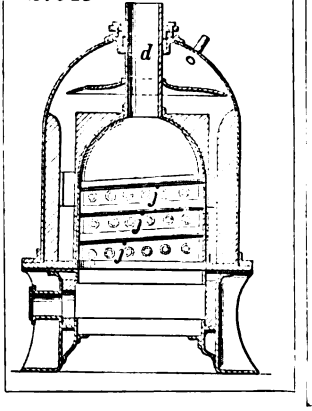

27846

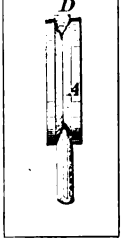

27845

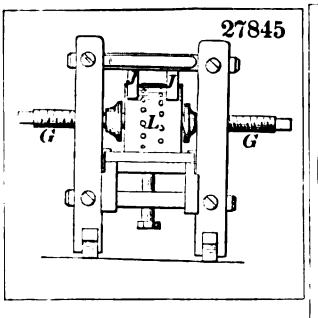

27847

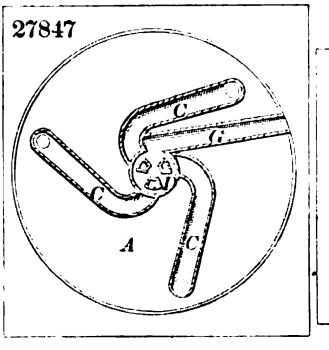

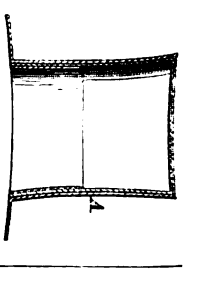

27849

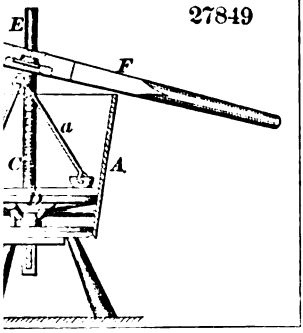

27850

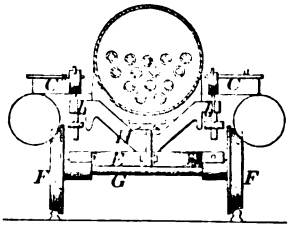

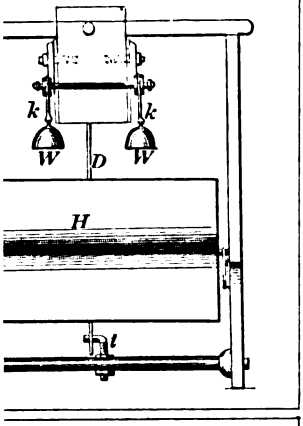

27852

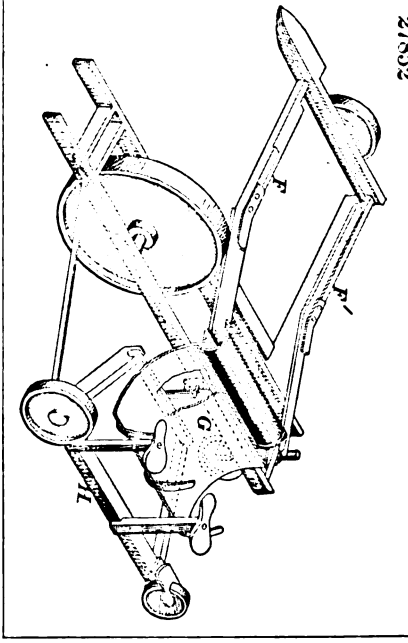

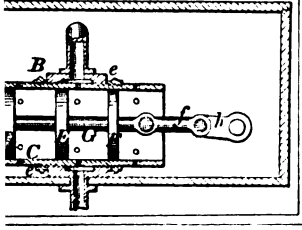

27853

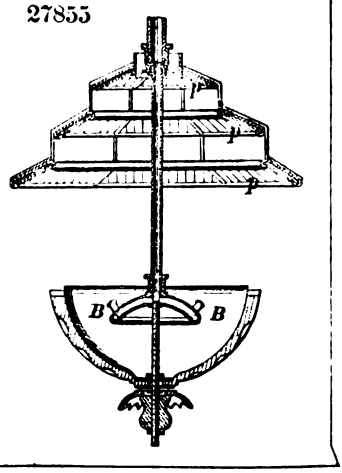

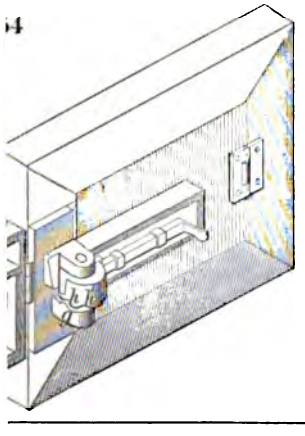

27856

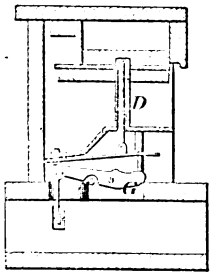

27857

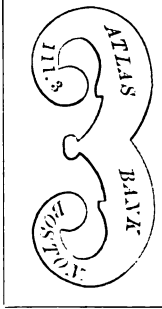

27858

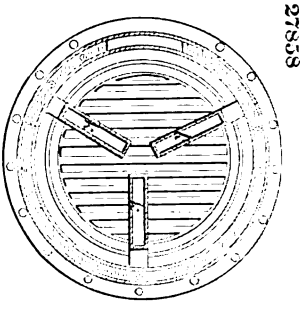

27860

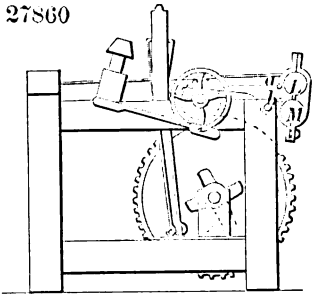

27861

27862

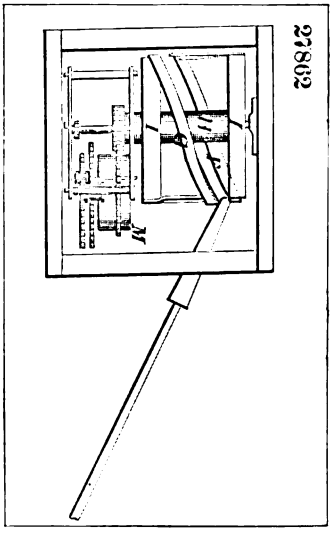

27863

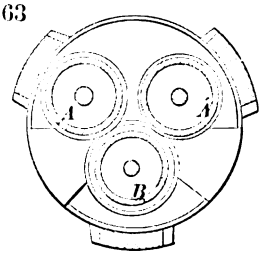

27865

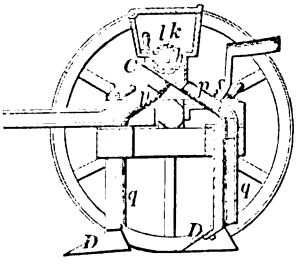

27864

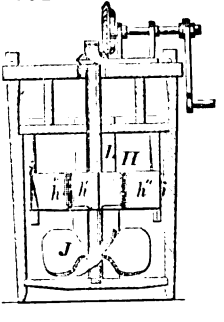

27866

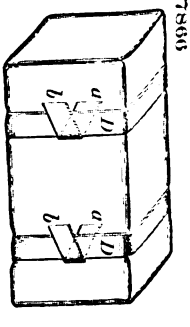

Fig. 1

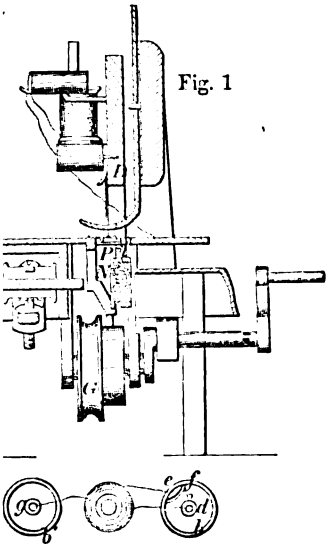

27868

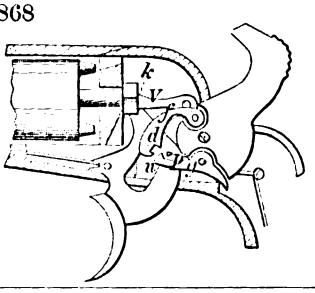

27869

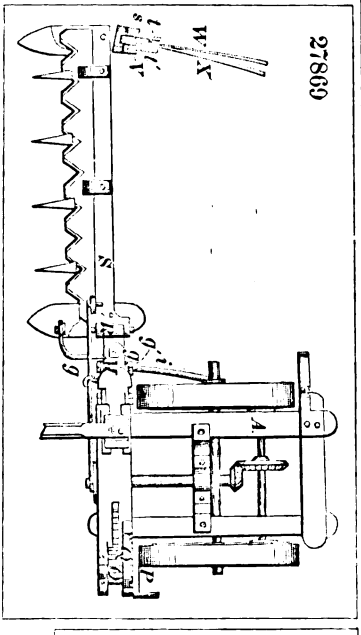

27871

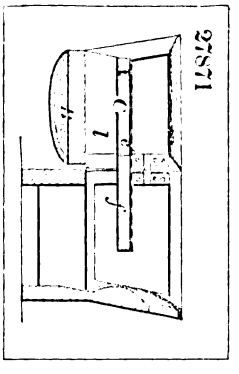

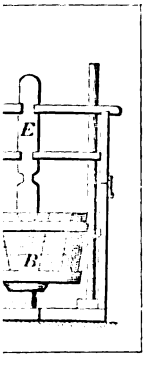

27873

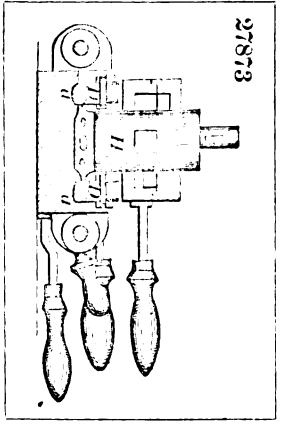

27872

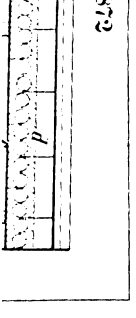

27874

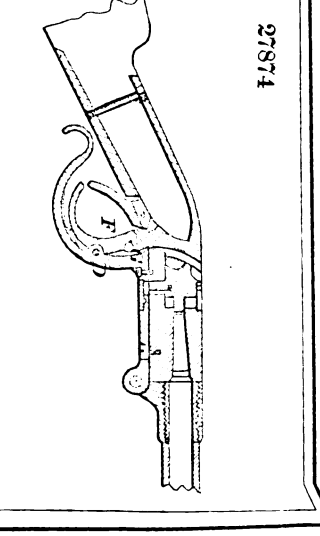

27875

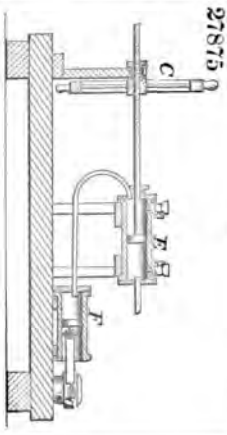

27876

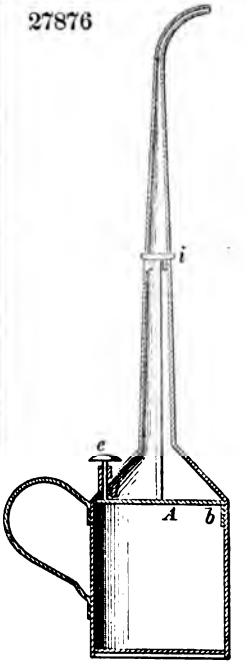

27880

27881

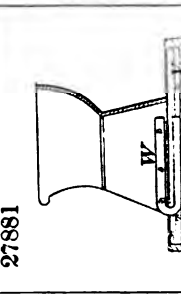

27882

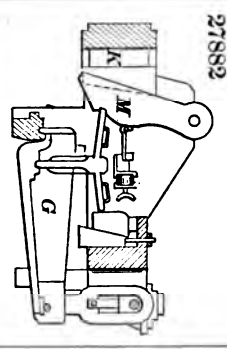

27879

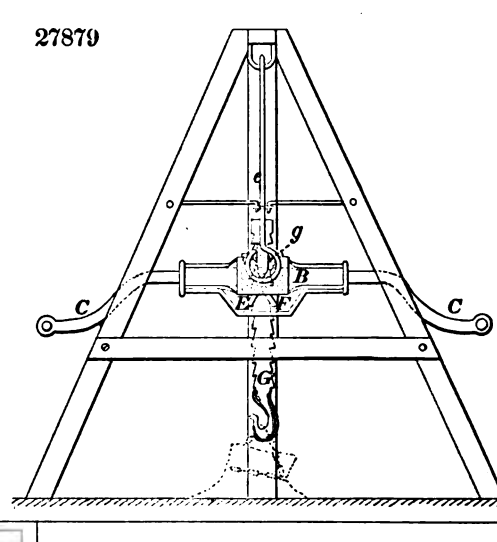

27883

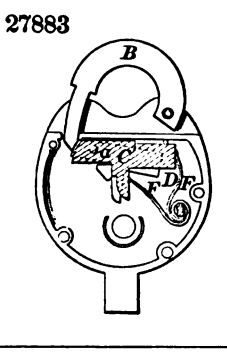

27885

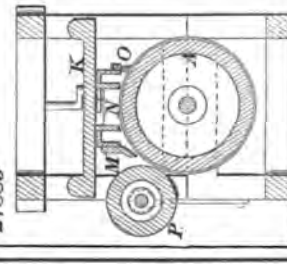

27884

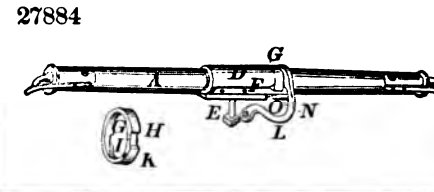

Fig. 1

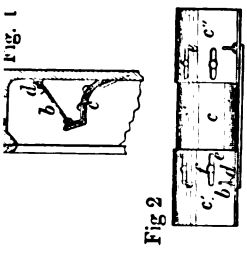

Fig 2

27887

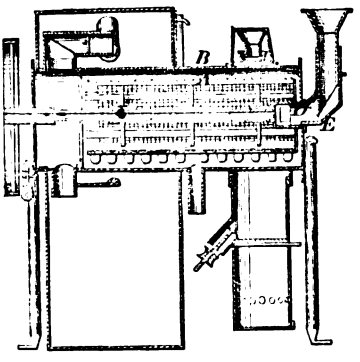

88

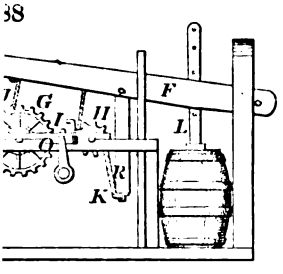

90

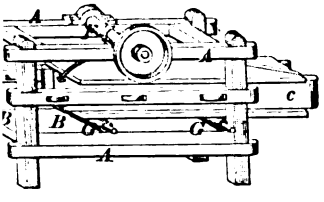

91

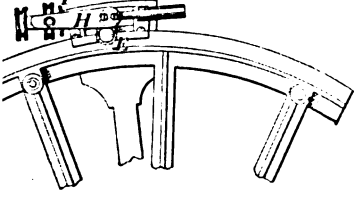

27889

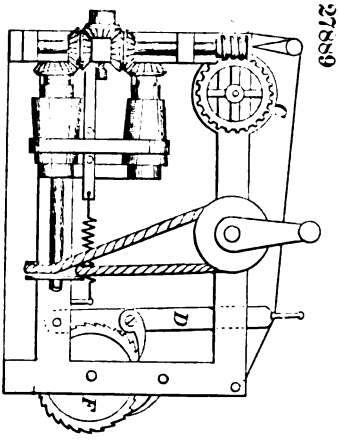

93

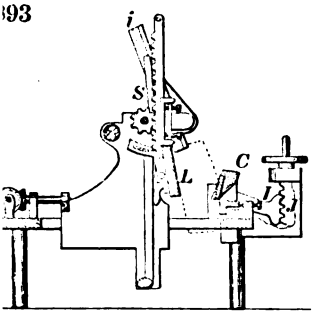

27892

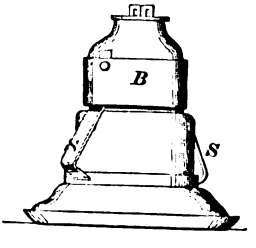

27894

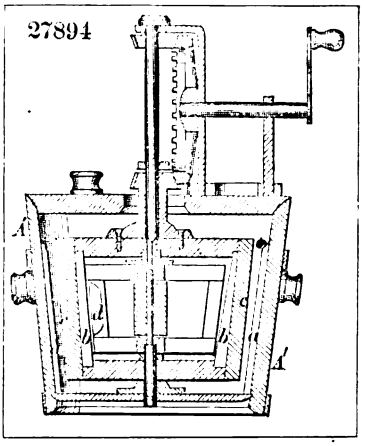

27895

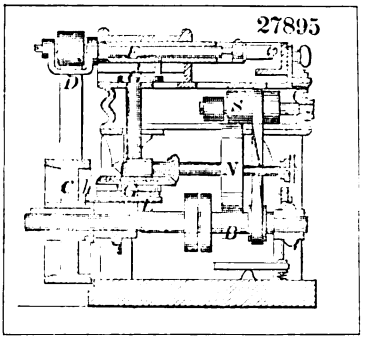

27896

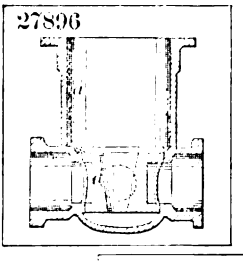

27897

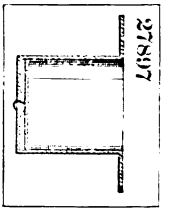

27898

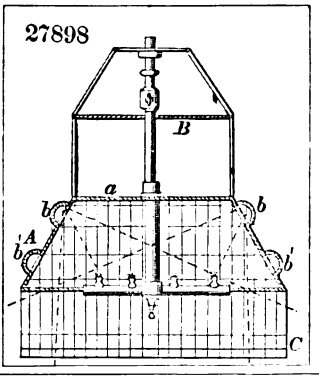

27899

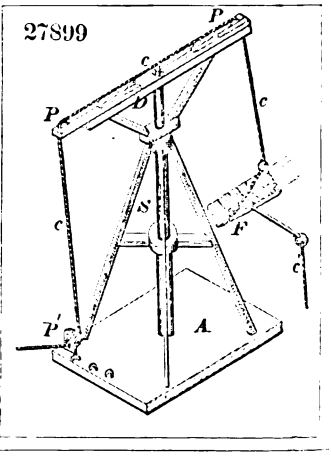

27900

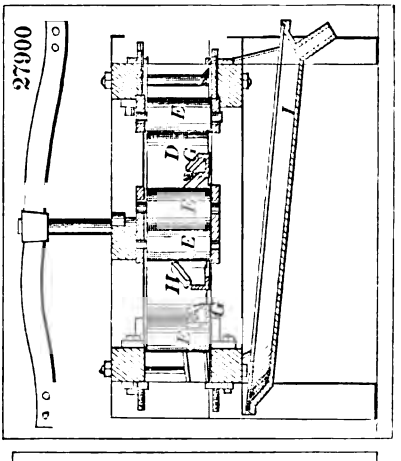

27901

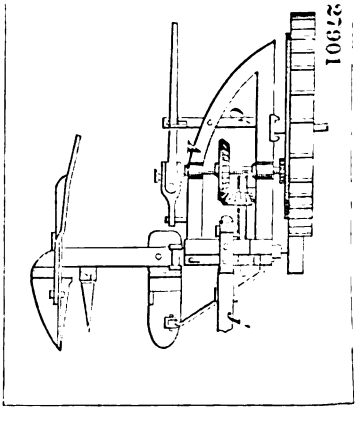

27902

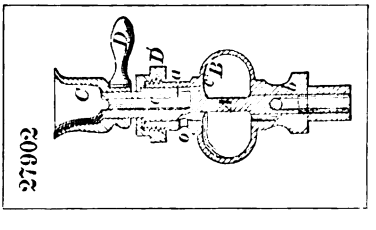

27903

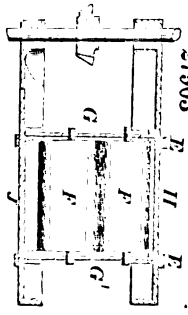

27904

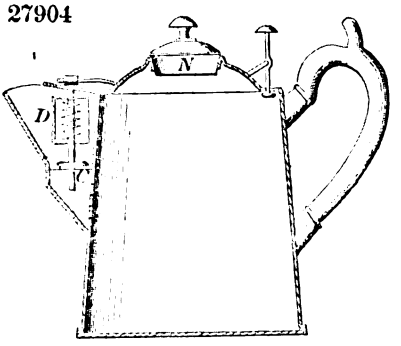

27905

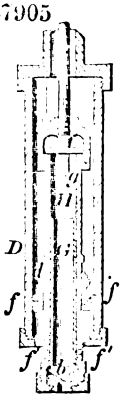

27906

27907

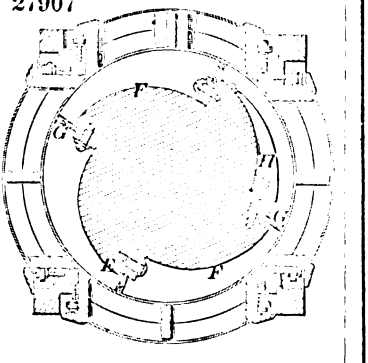

27908

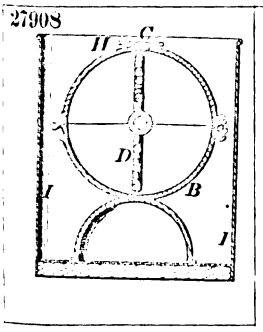

27909

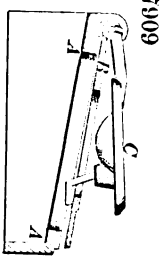

27910

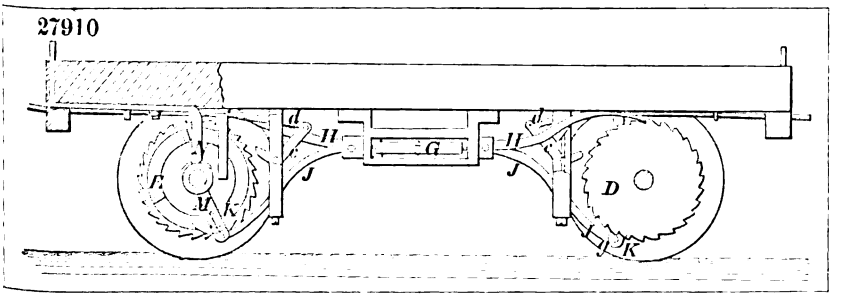

27911

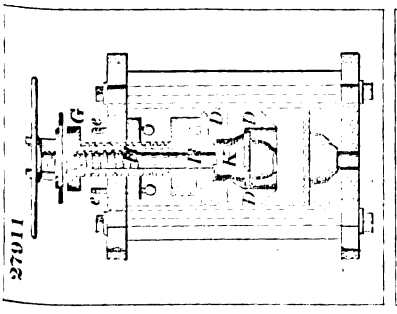

27912

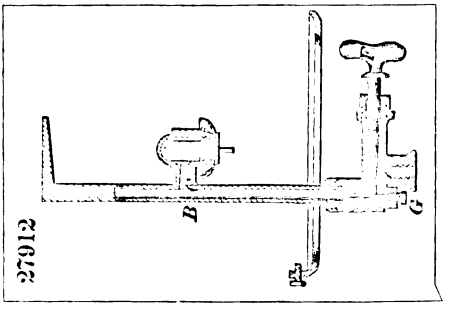

27913

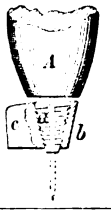

27914

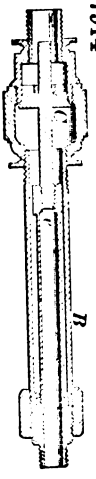

27915

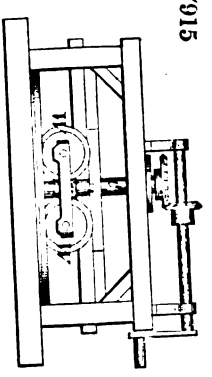

27916 Fig. 1

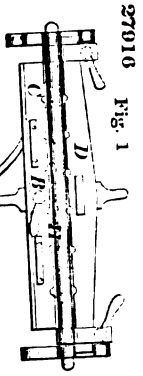

Fig. 2

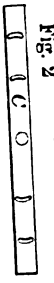

27918

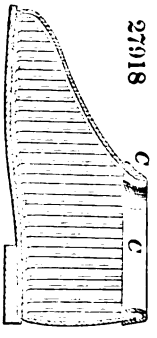

27917

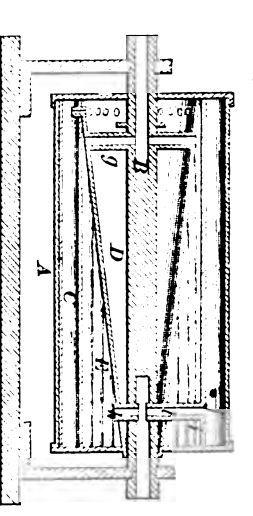

27919

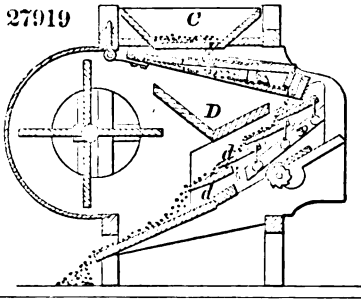

27921

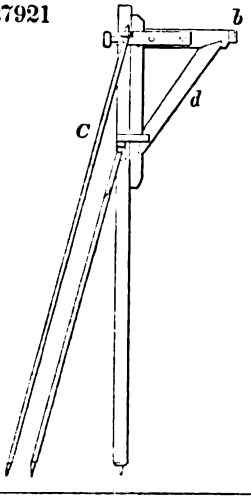

27920

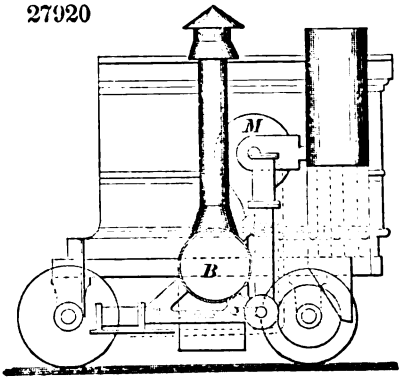

27922

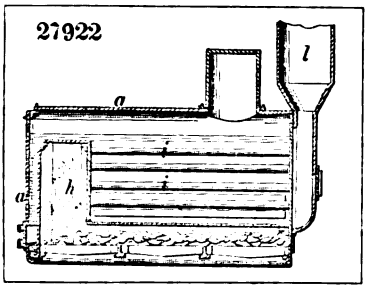

27923

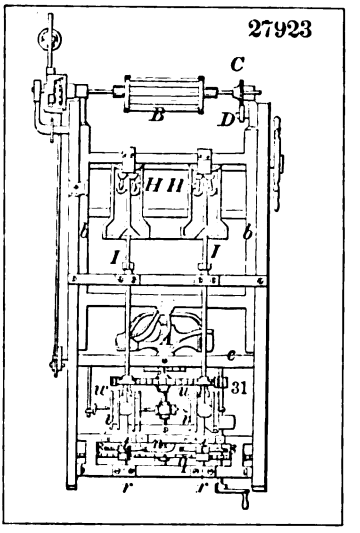

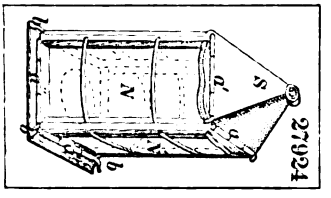

27925

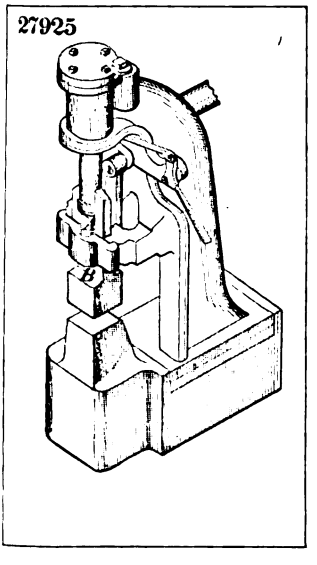

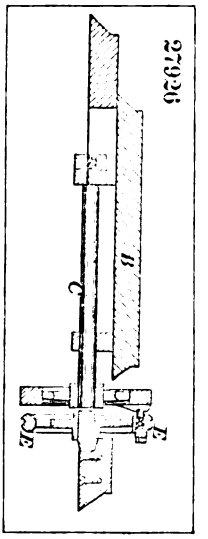

27927

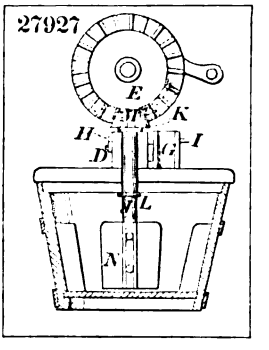

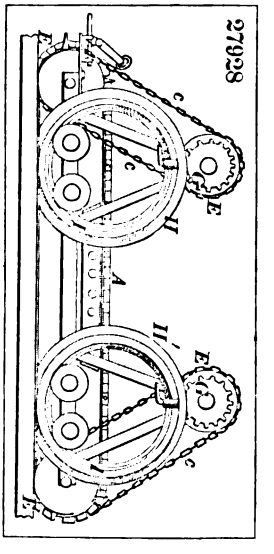

27929

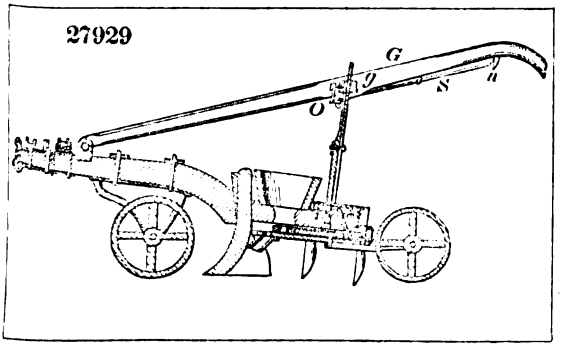

27930

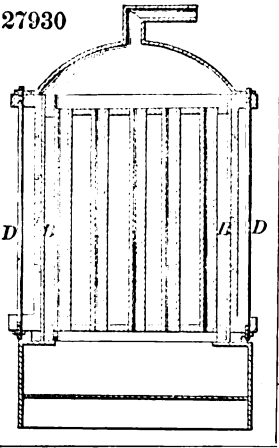

27931

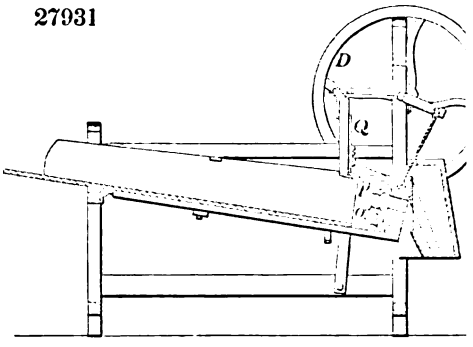

27933

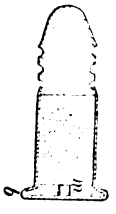

27932

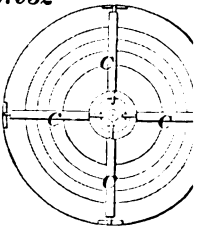

27934

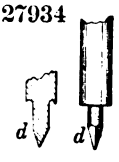

27935

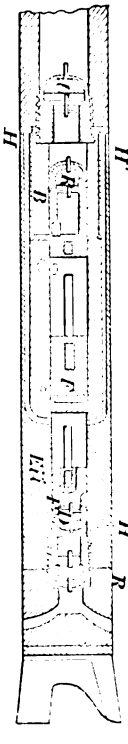

27936

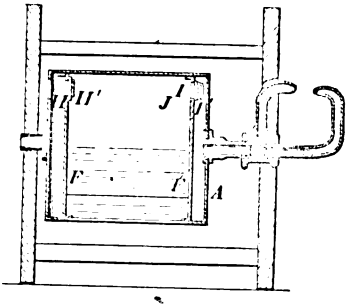

27937

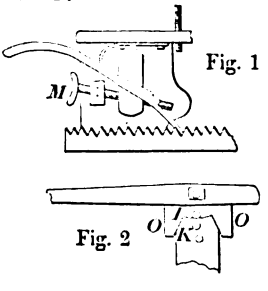

Fig. 1

Fig. 2

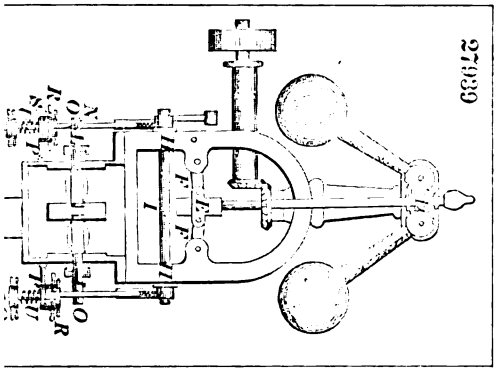

27940

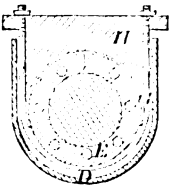

27941

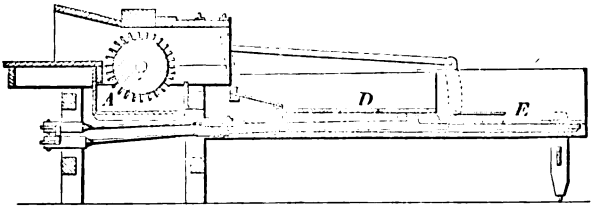

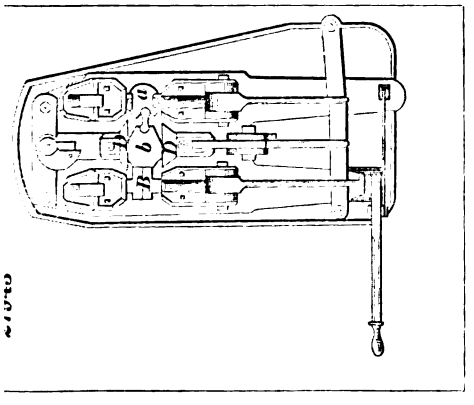

27944

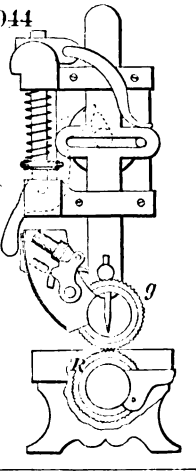

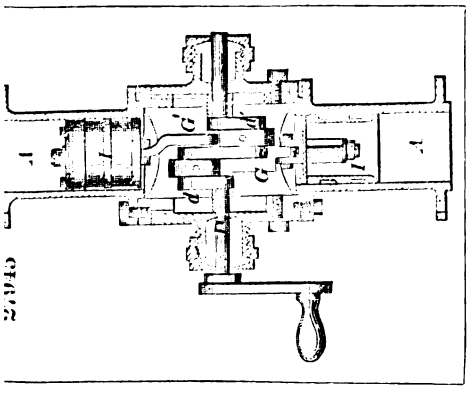

27942

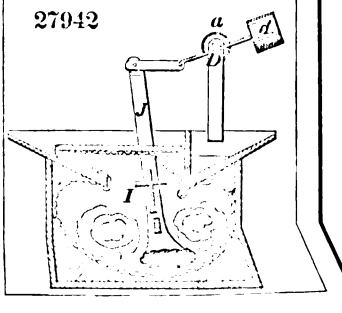

27946

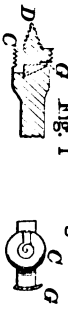

Fig. 1

Fig. 2

27947

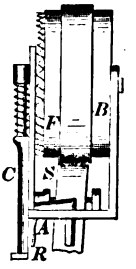

27948

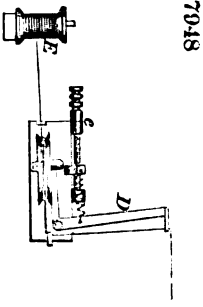

27949

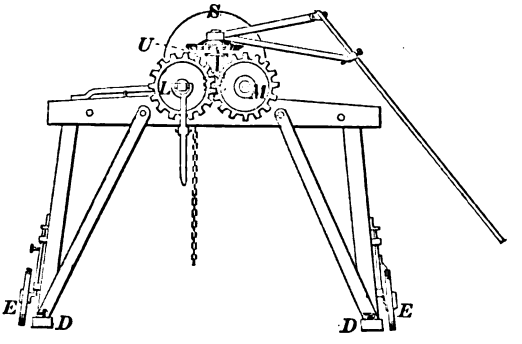

27950

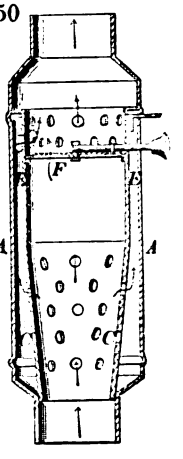

27951

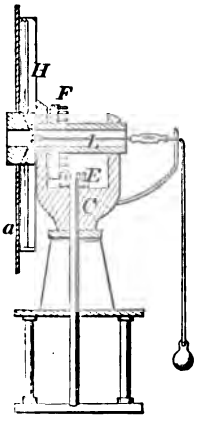

27952

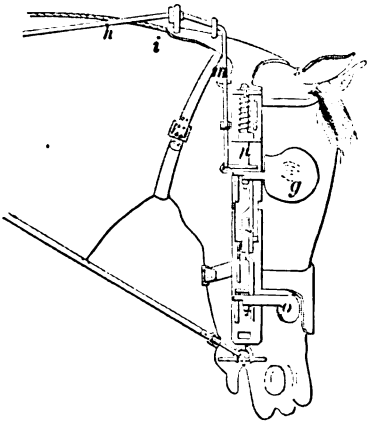

27953

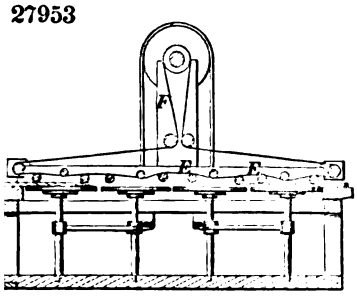

27954

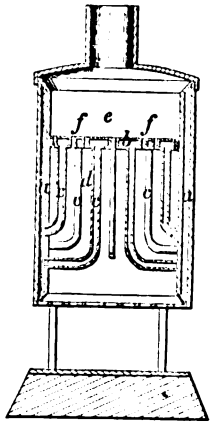

27955

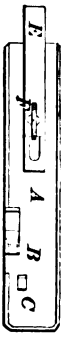

27956

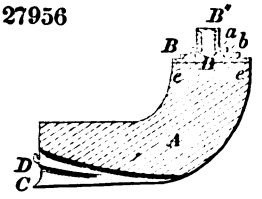

27957

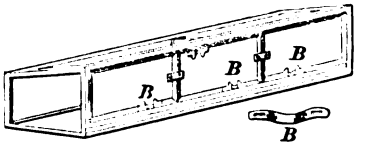

27958

Fig. 1

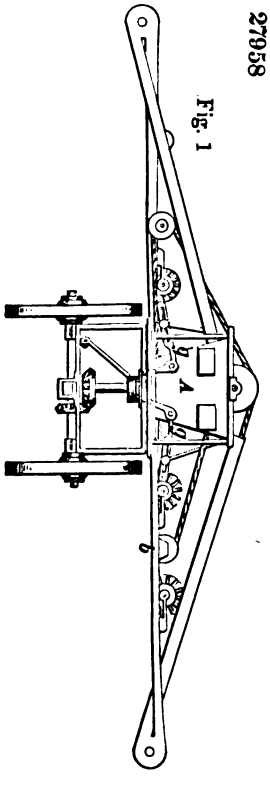

Fig. 2

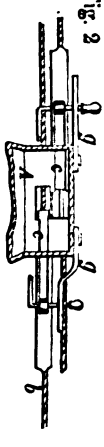

27959

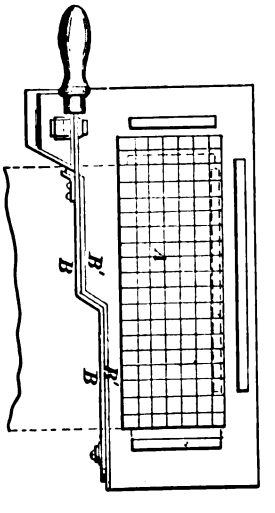

27960

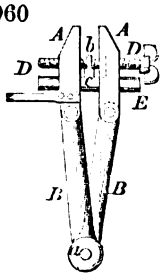

27962

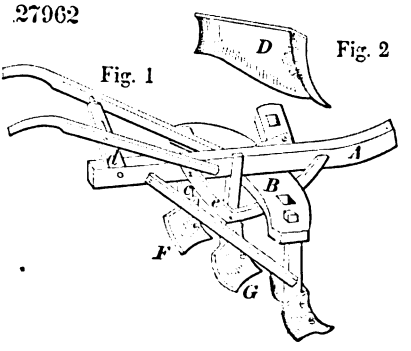

27963

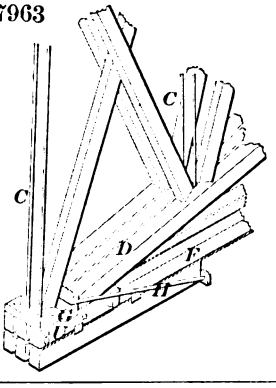

27964

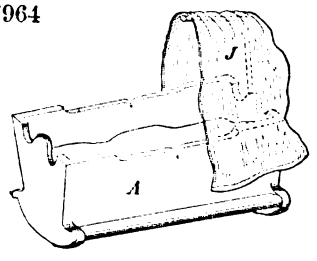

27965

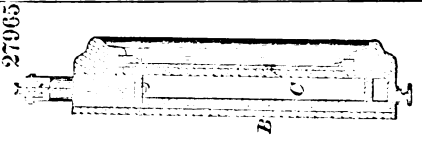

27966

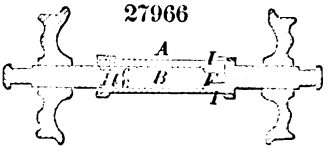

27967

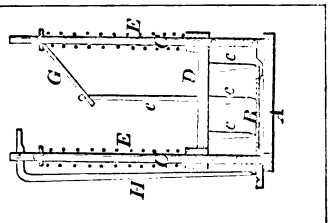

27968 Fig. 1

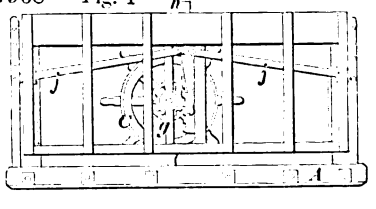

Fig. 2

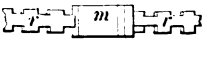

27969

Fig 1

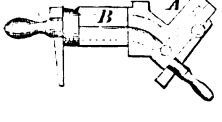

Fig. 2

27970

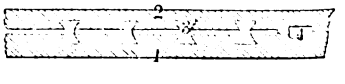

27971

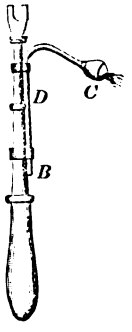

27973

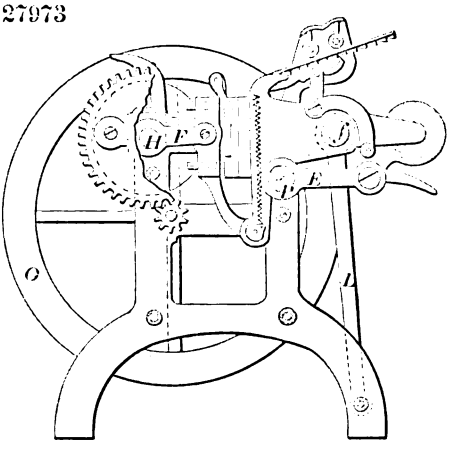

27972

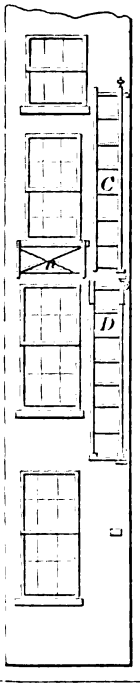

27974

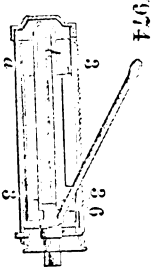

27975

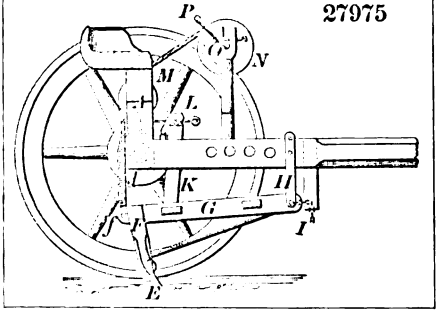

27976

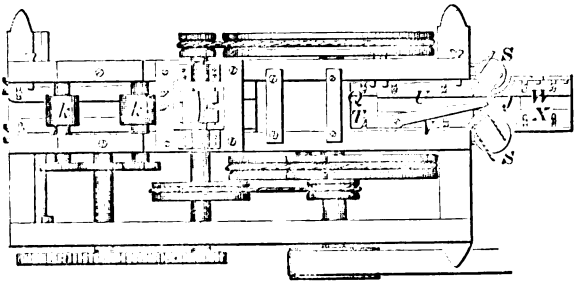

27978

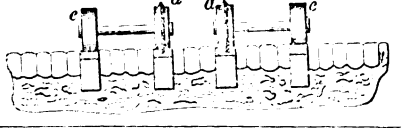

27977

27979

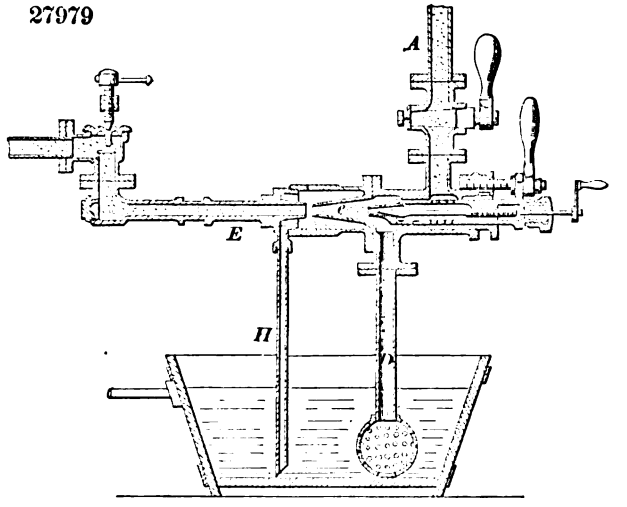

27982

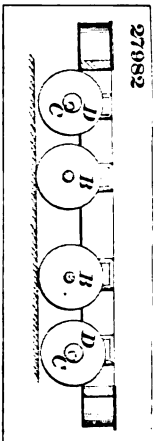

27980

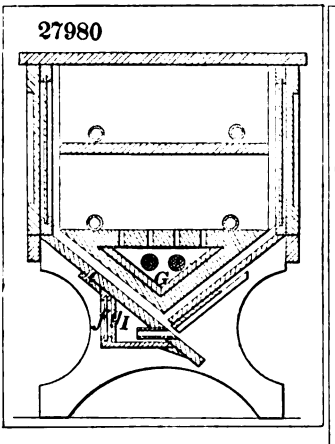

27983

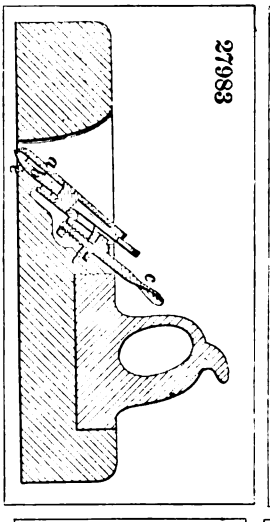

27984

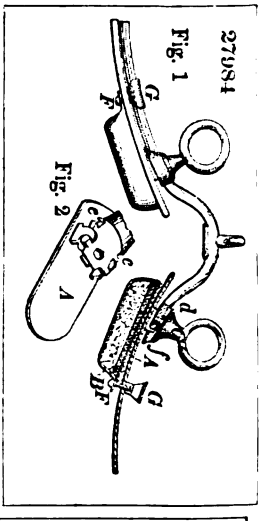

27985

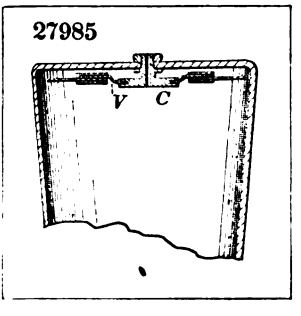

27986

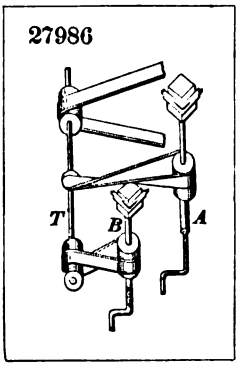

27987

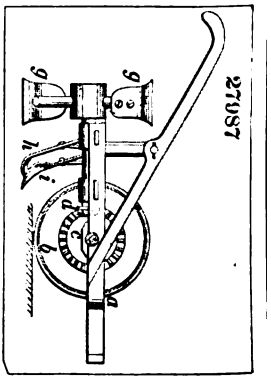

27988

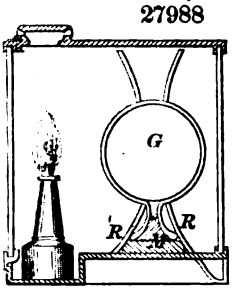

27989

Fig. 1

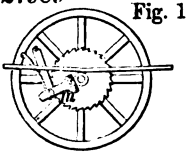

Fig. 2

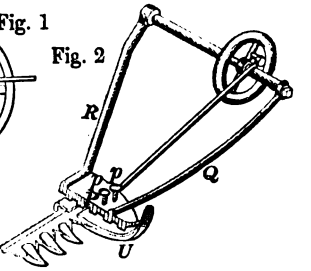

27990

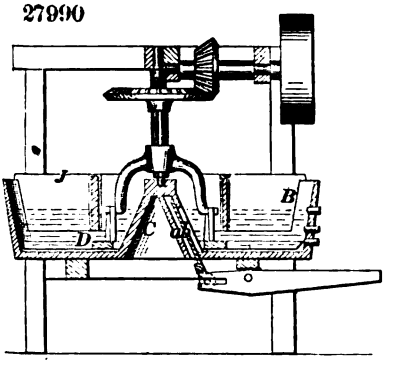

27992

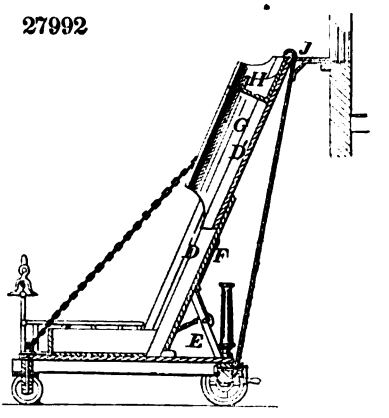

27991

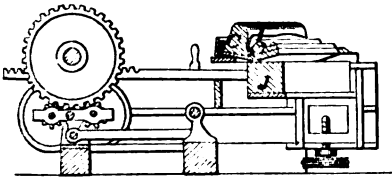

27993

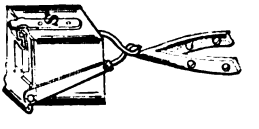

27994

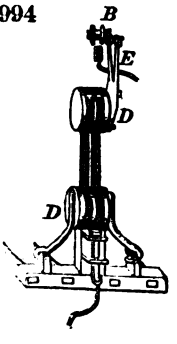

27995

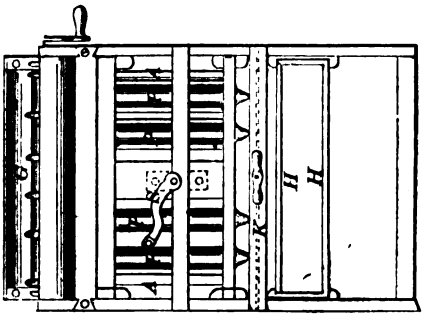

27996

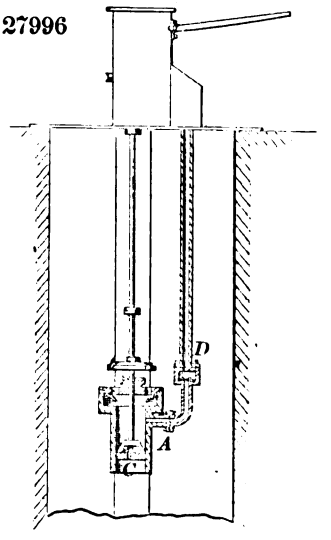

27997

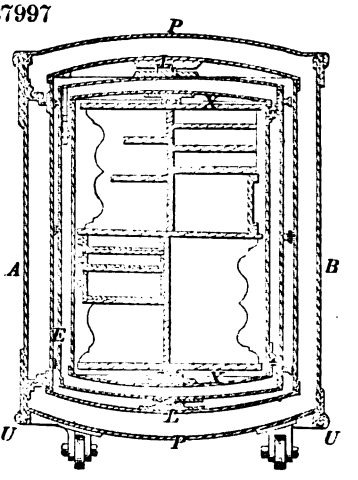

28000

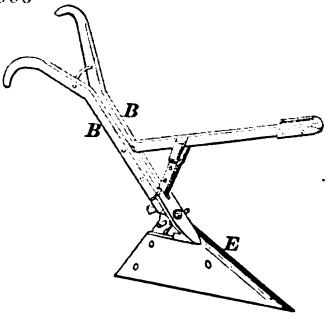

27998

27999

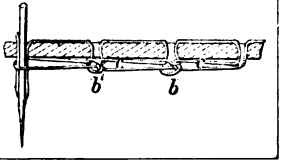

28002

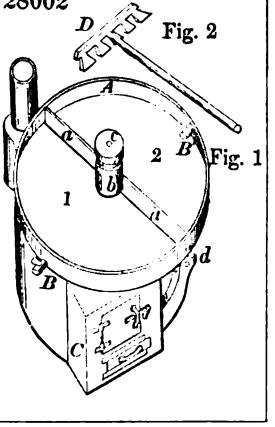

28003

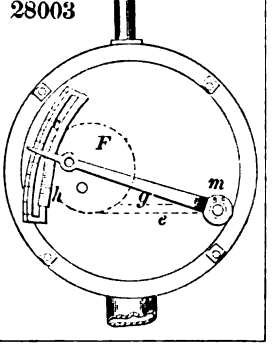

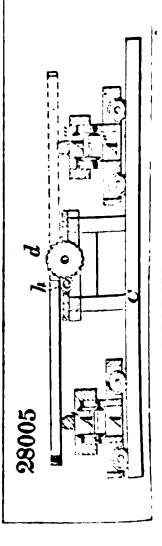

28004

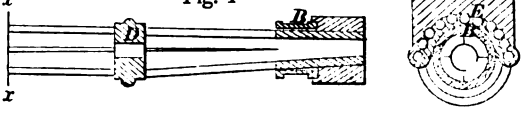

28006

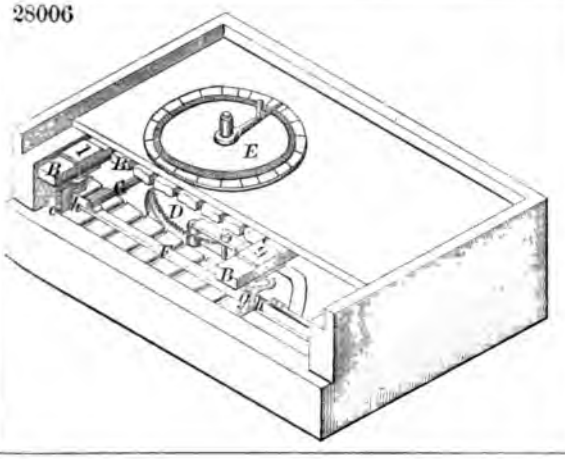

28007

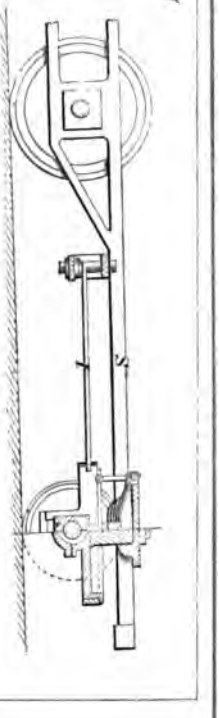

28008

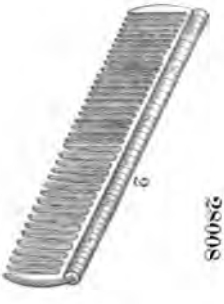

28009

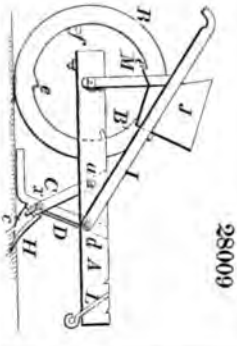

28010

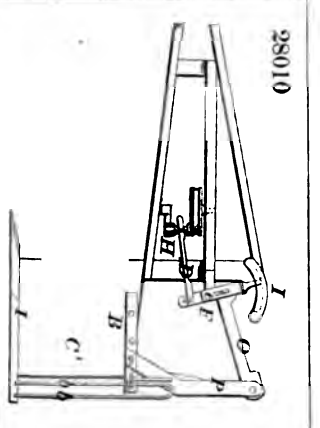

28011

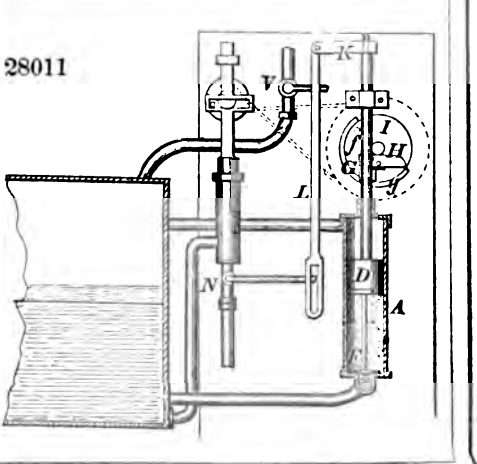

28012

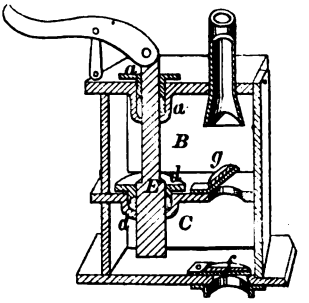

28013

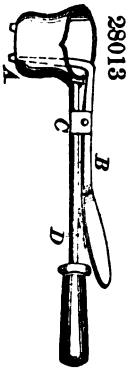

28014

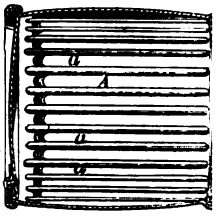

28015

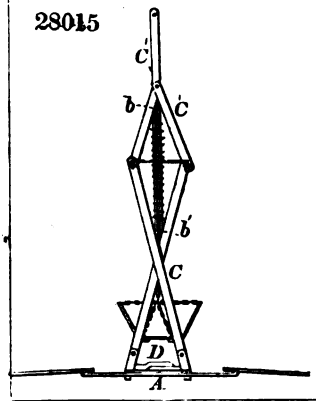

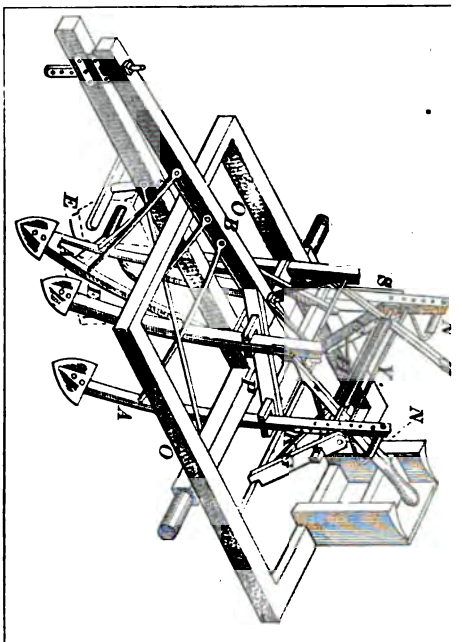

28017

28018

Fig. 1

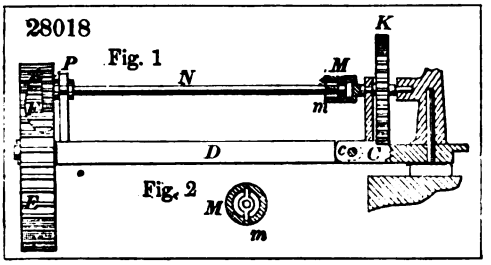

Fig. 2

28019

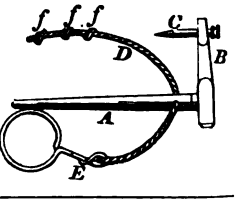

28020

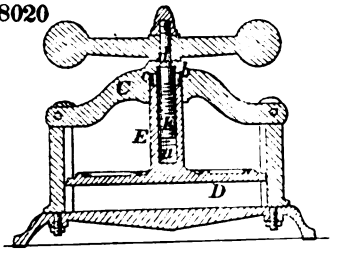

28021

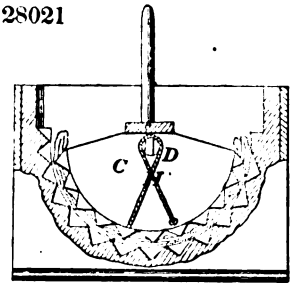

28022

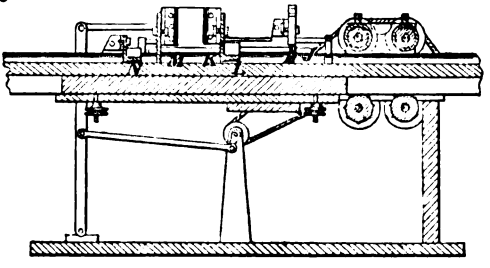

28023

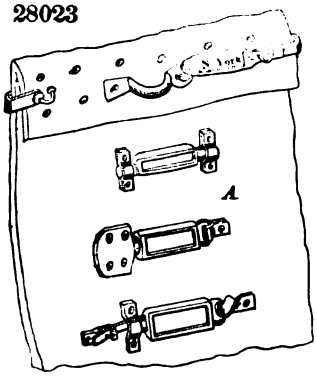

28024

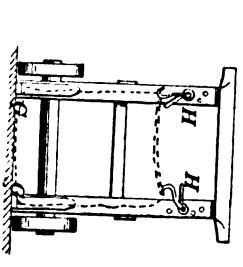

28025

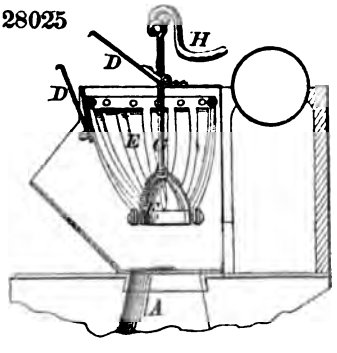

28026

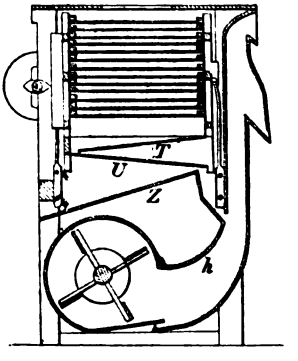

28027

Fig. 1

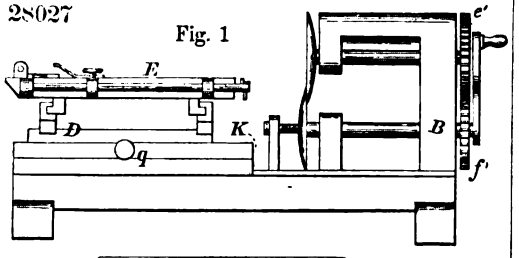

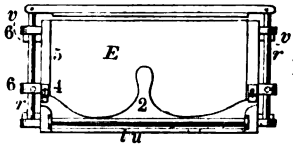

Fig. 2

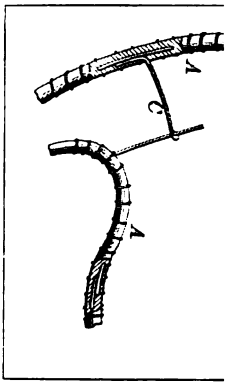

28029

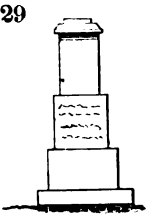

28030

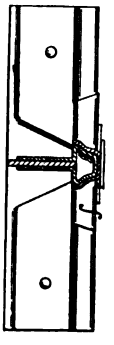

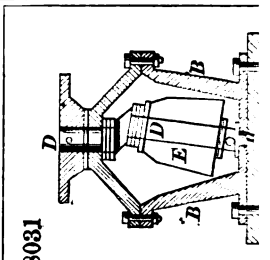

28031

28032

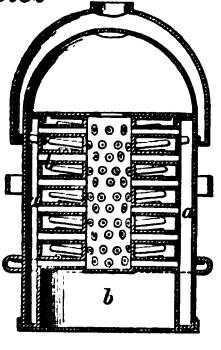

28033

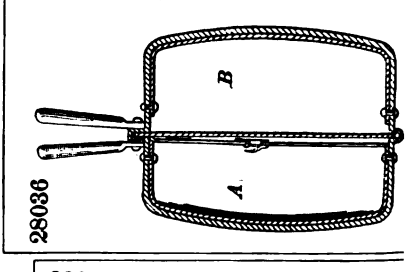

28036

28034

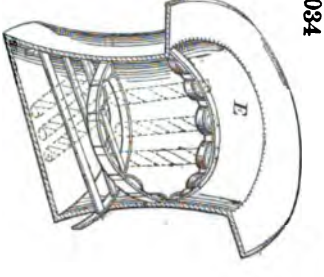

28035

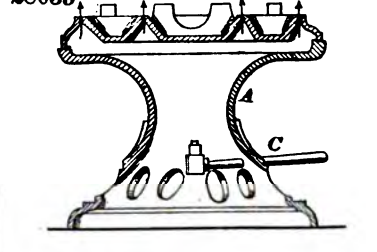

8037

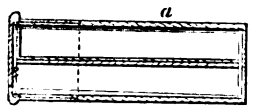

28038

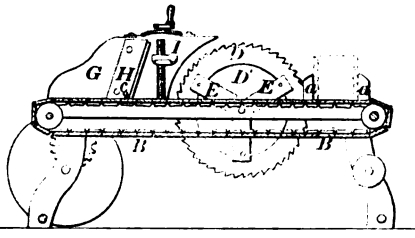

039

28040

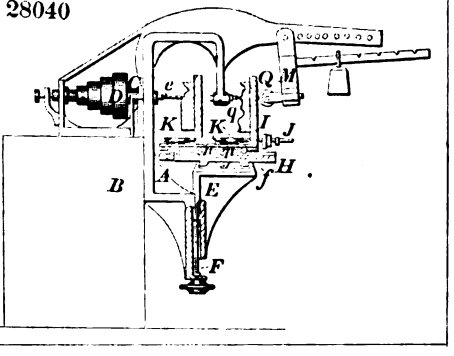

28041

Fig. 1

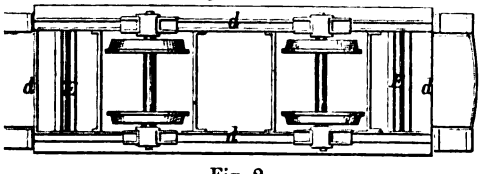

Fig. 2.

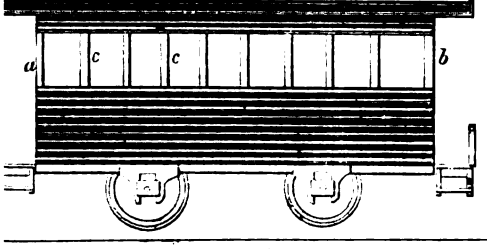

28042

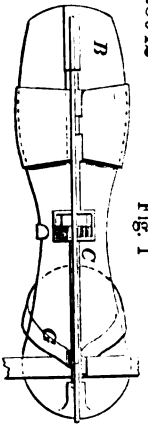

Fig. 1

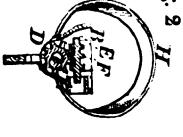

Fig. 2

28043

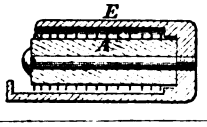

28044

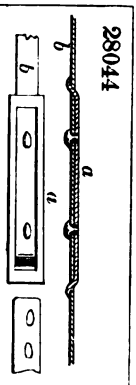

28045

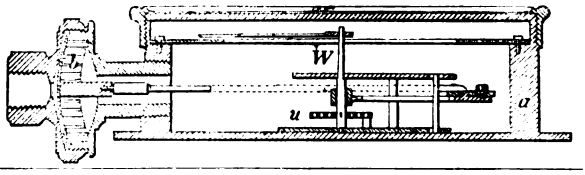

28046

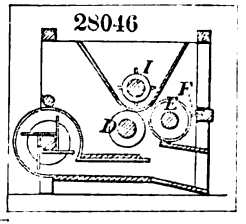

28048

Fig. 1

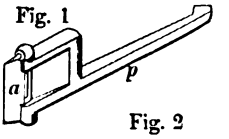

Fig. 2

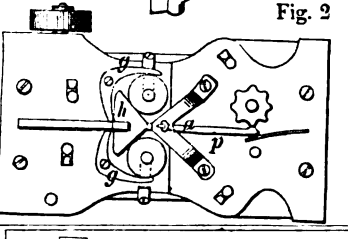

28047

28049

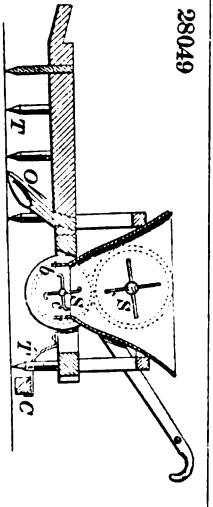

28050

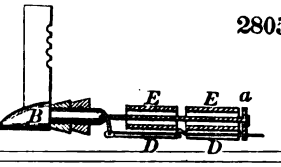

28051

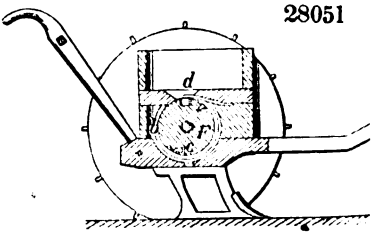

28054

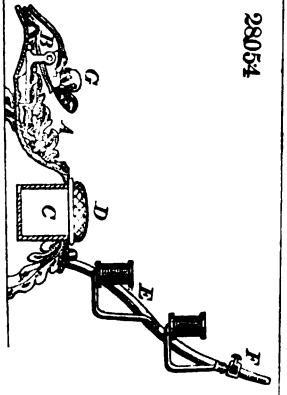

28052

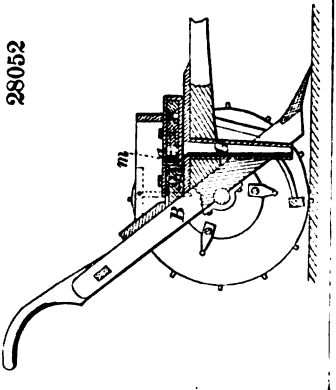

28053

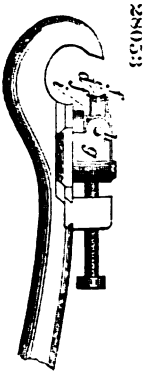

28056

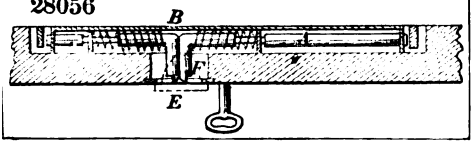

28057

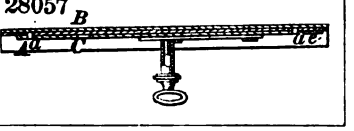

28058

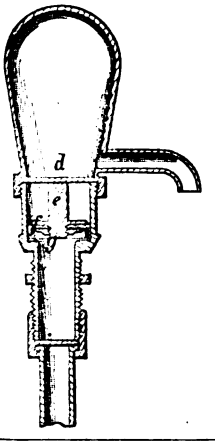

28059

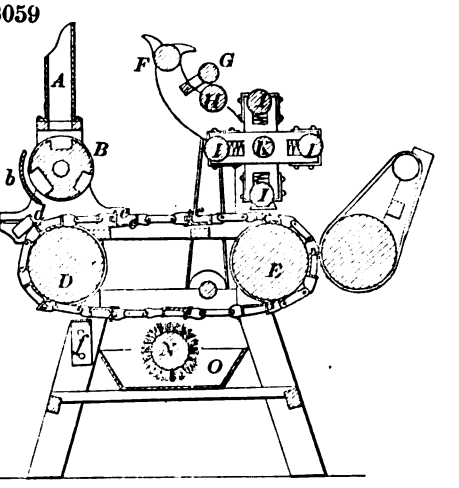

28060

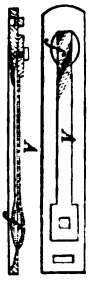

28062

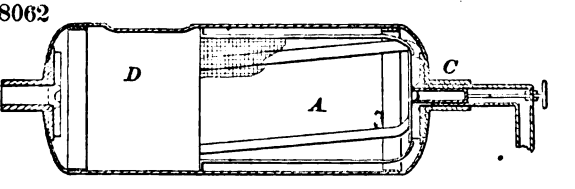

28063

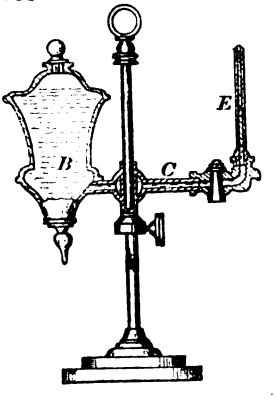

28061

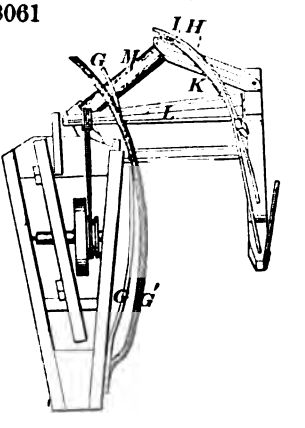

28064

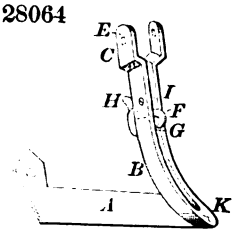

28065

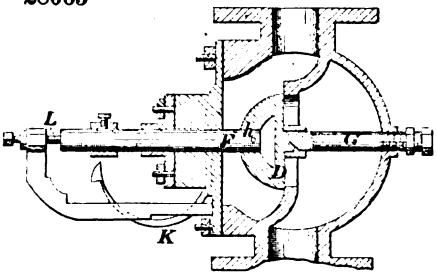

28066

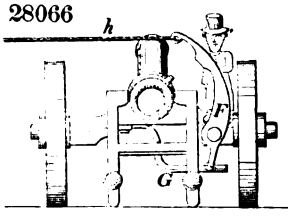

28067

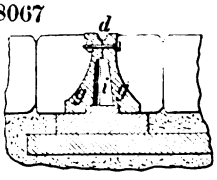

28068

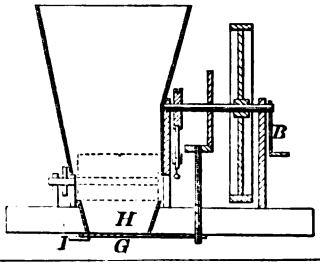

28071

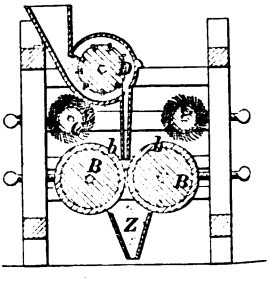

28069

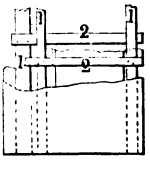

28072

Fig. 1

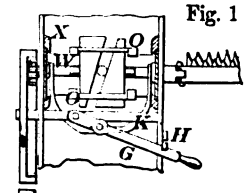

Fig. 2

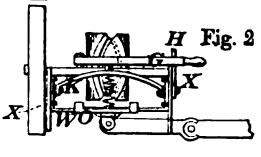

28073

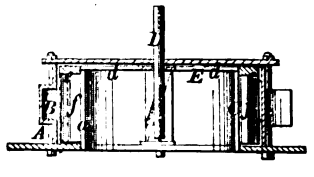

074

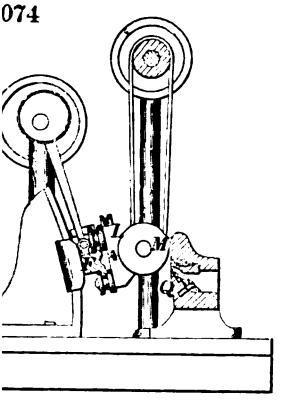

28075

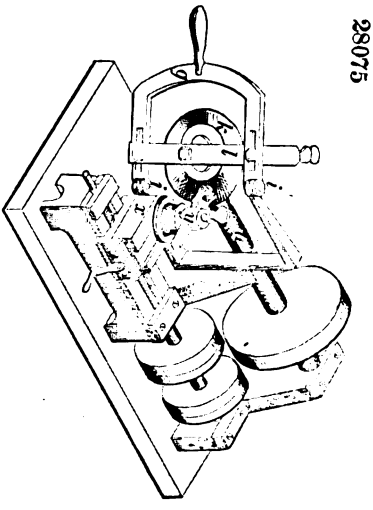

76

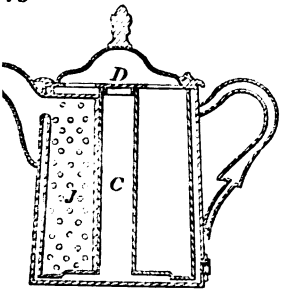

28077

28078

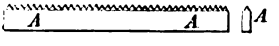

80

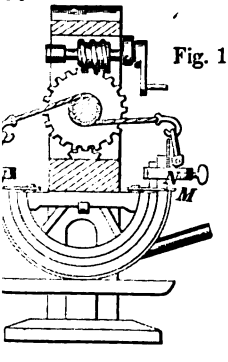

Fig. 1

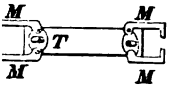

Fig. 2

28079

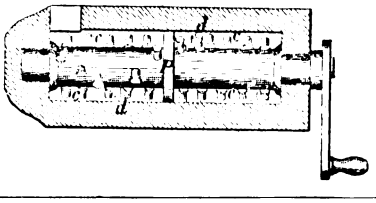

28081

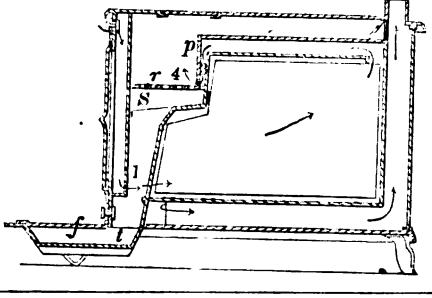

28082

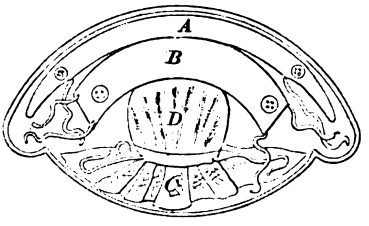

28083

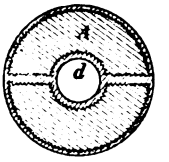

28084

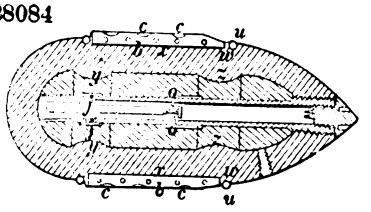

28085

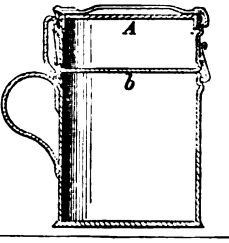

28086

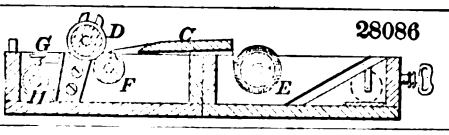

28087

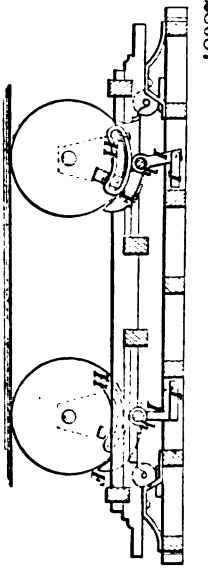

28088

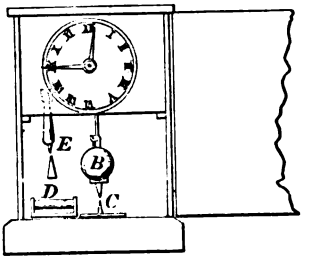

28089

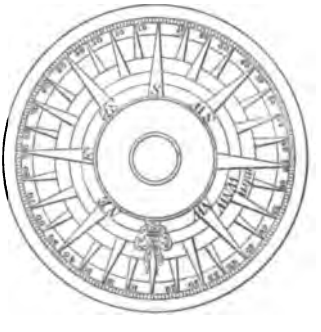

28090

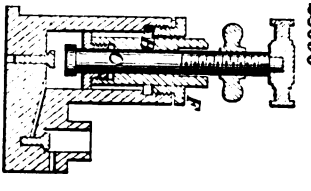

28091

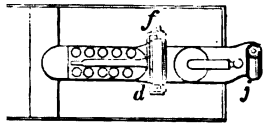

28092

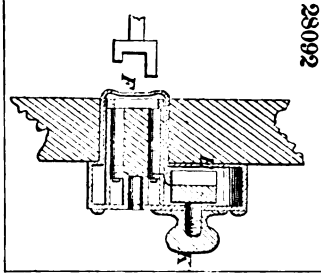

28093

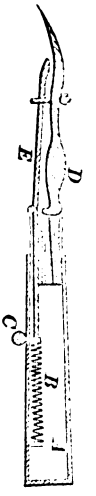

3094

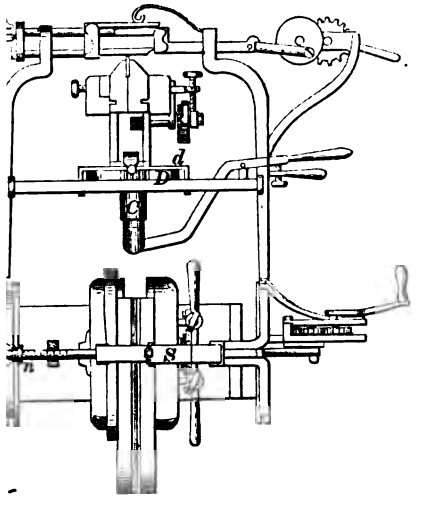

28095

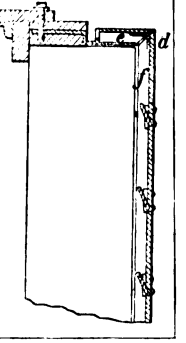

28096

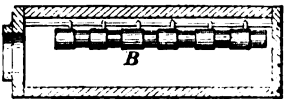

197

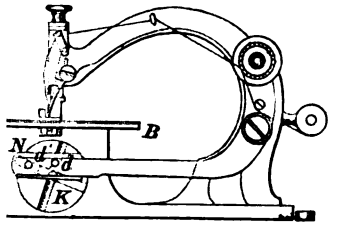

28098

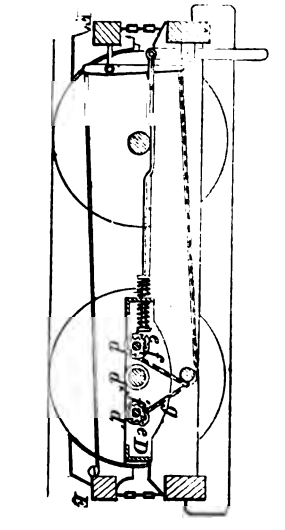

3099

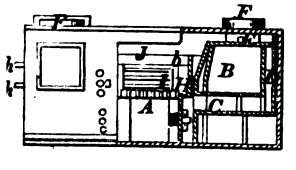

28100

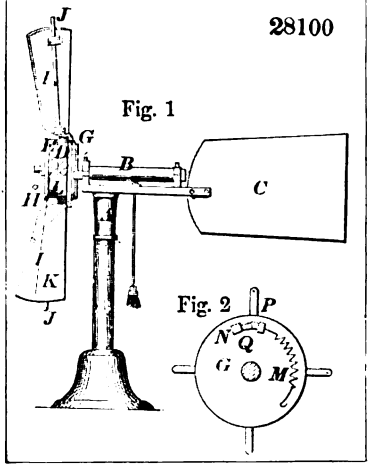

28101

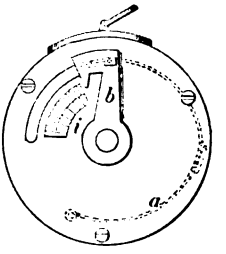

28104

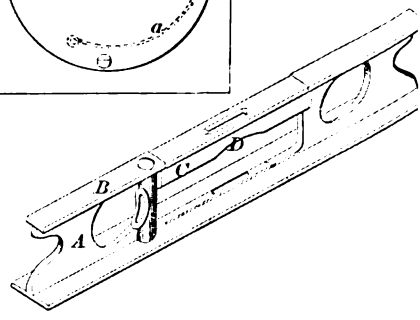

28102

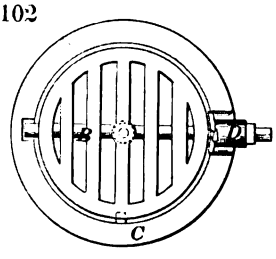

28103

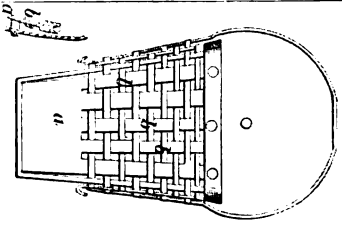

28106

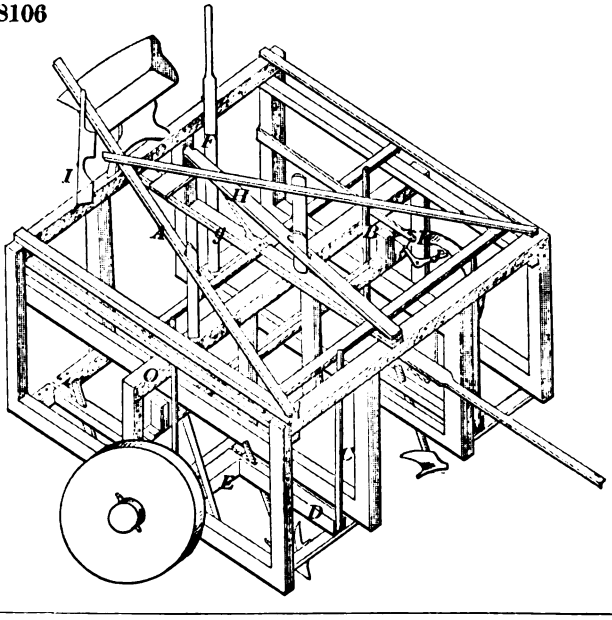

28108

Fig. 1

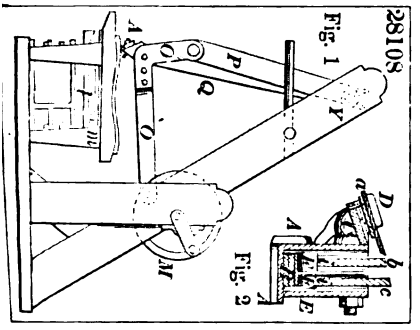

Fig. 2

28109

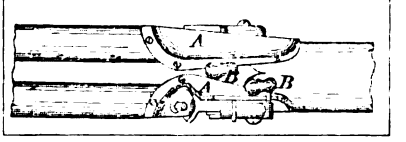

28110

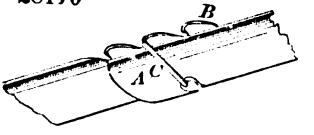

28111

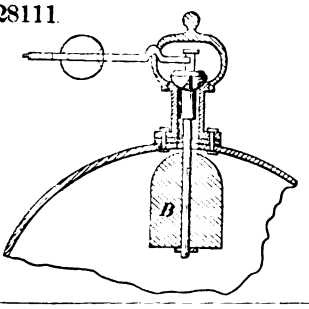

28112

Fig. 1

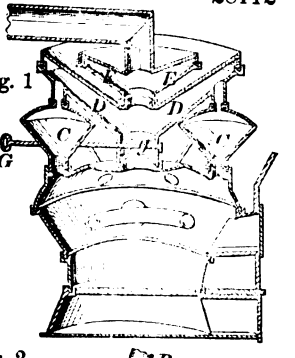

Fig. 2

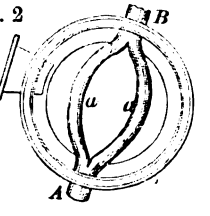

28115

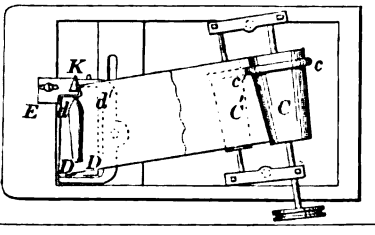

28113

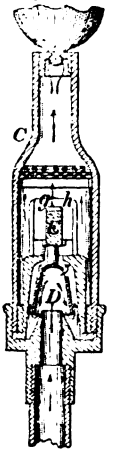

28114

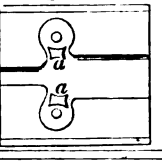

28116

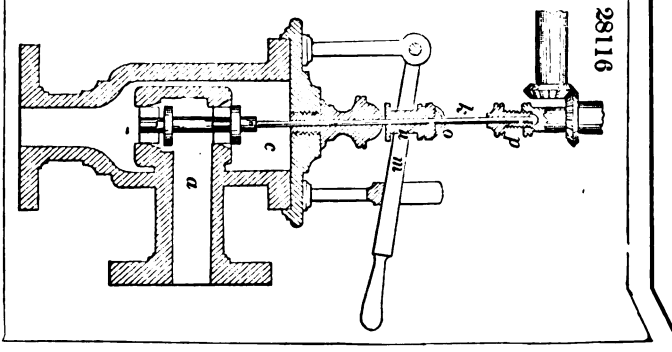

28117

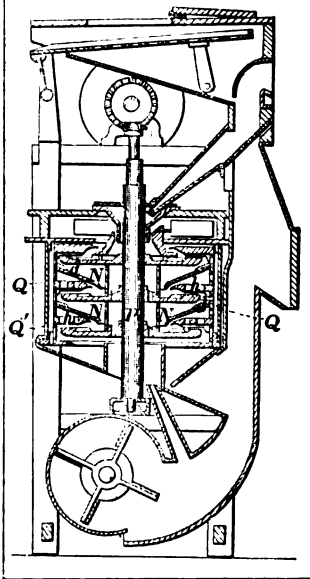

28118

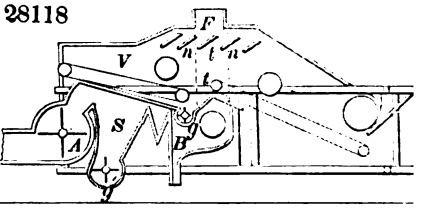

28119

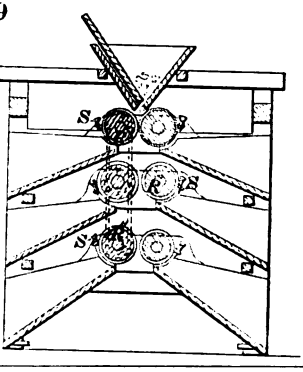

28120

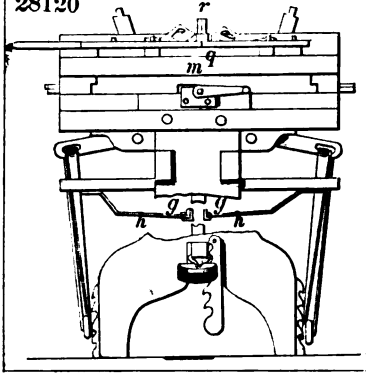

28121

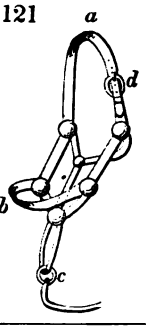

28122

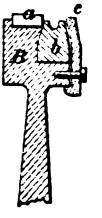

28123

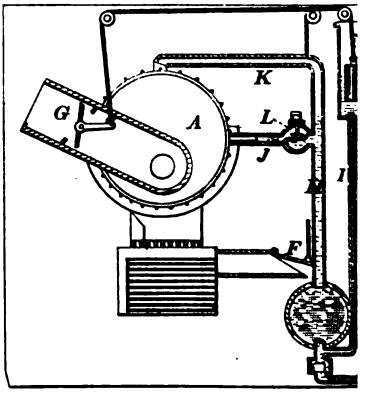

28124

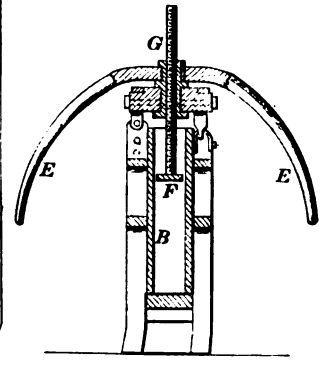

28125

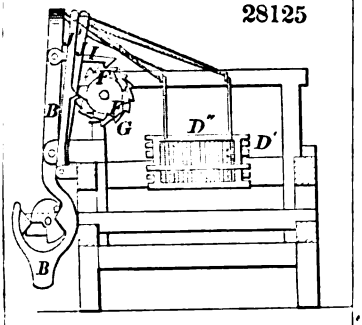

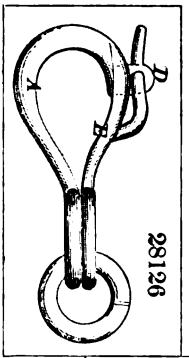

28127

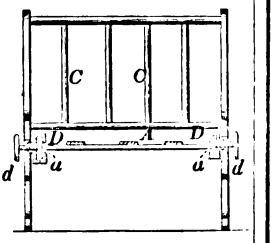

28128

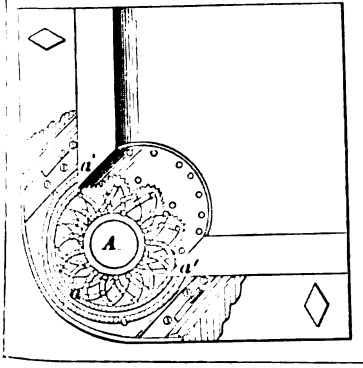

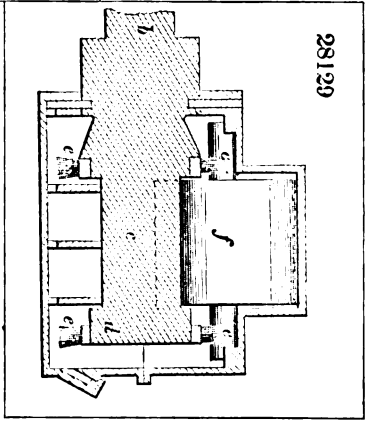

28130

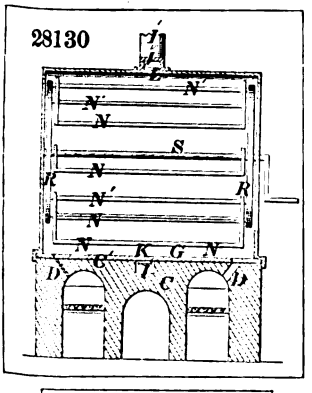

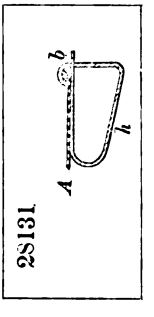

28132

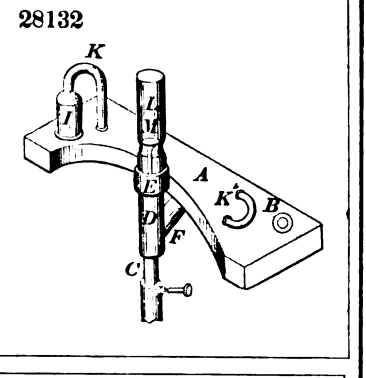

28134

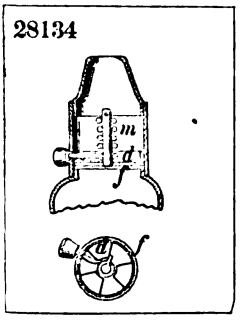

28133

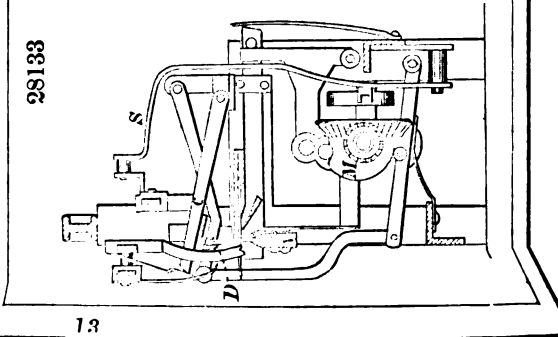

28135

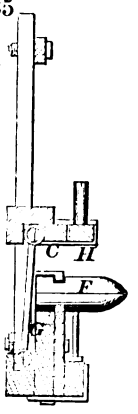

28136

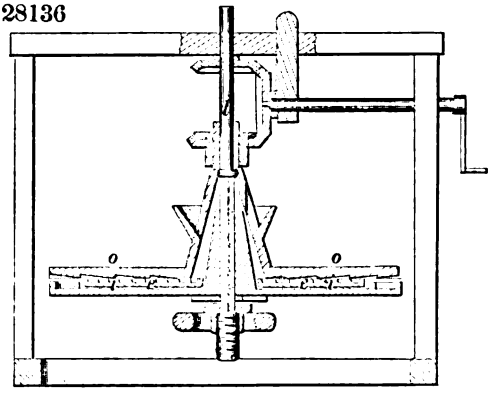

28137

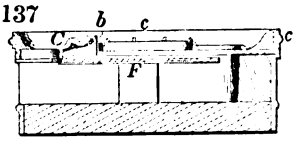

28138

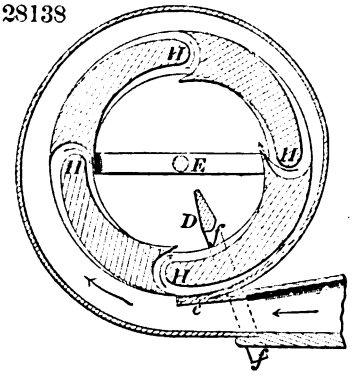

28139

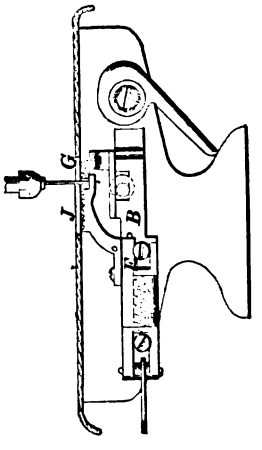

28140

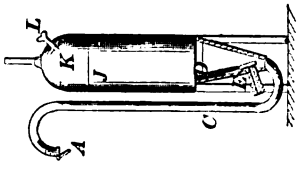

28142

Fig. 1

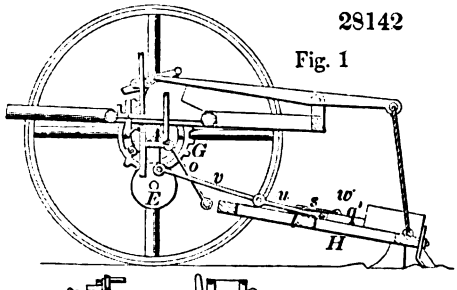

Fig. 2

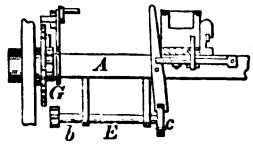

28141

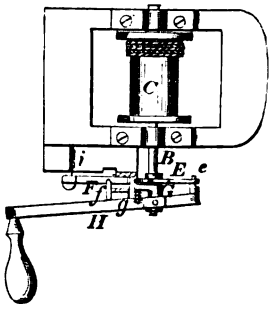

28143

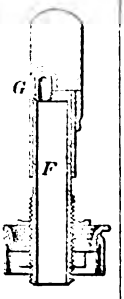

28144

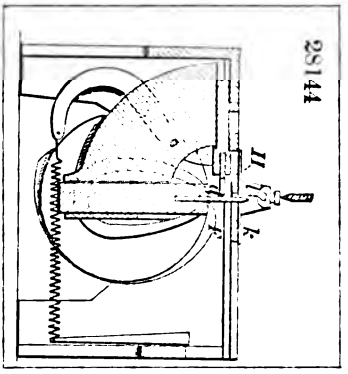

28145

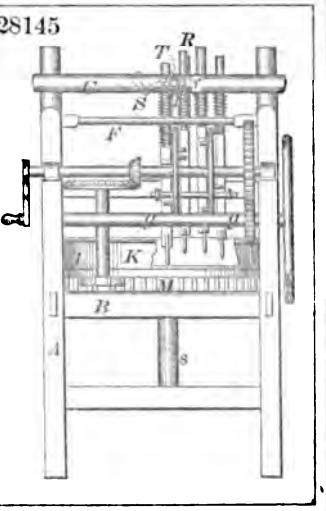

28146

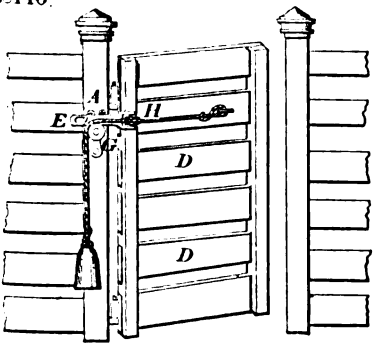

28147

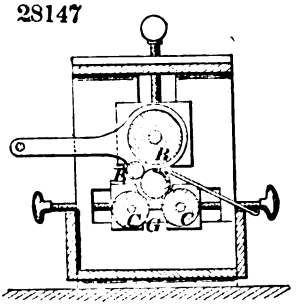

28148

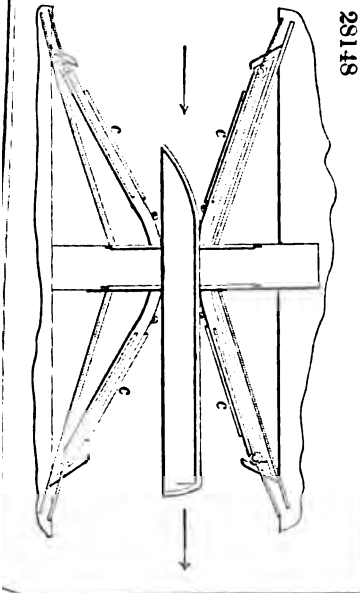

28149

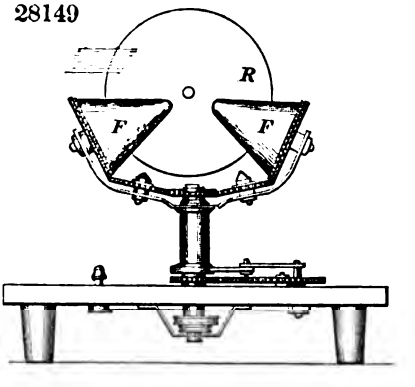

28150

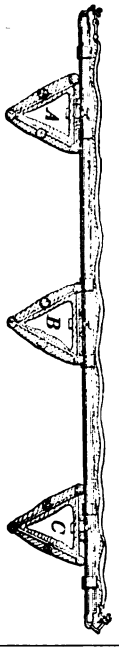

28151

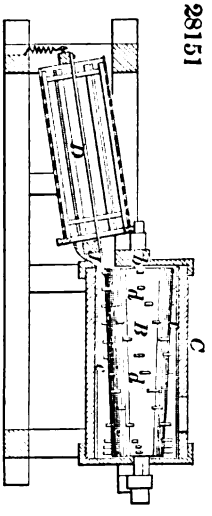

28152

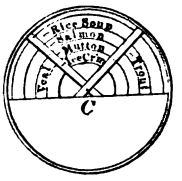

28153

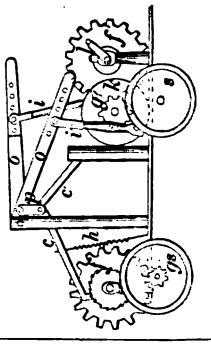

28154

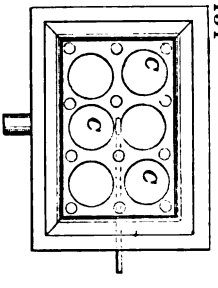

28155

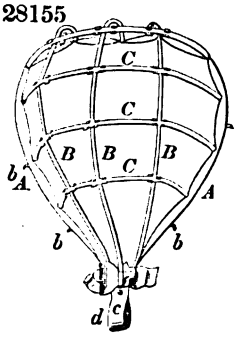

28156

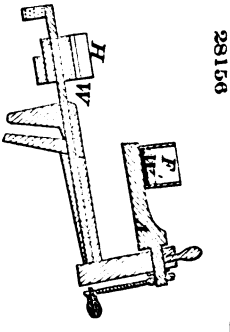

28157

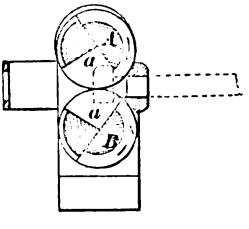

28158

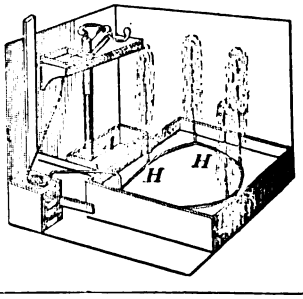

28159

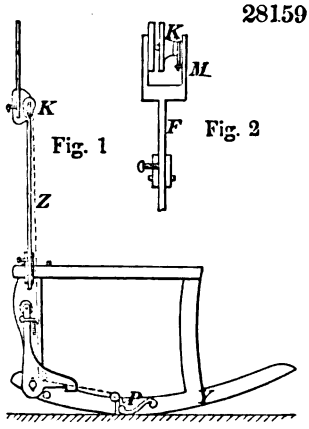

Fig. 1 Fig. 2

28160

28161

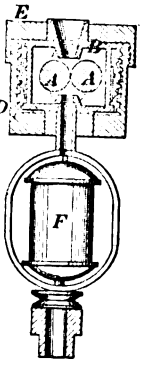

28162

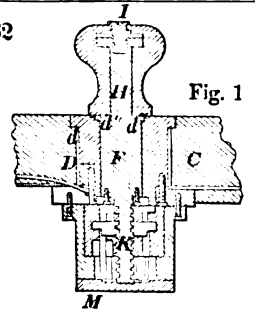

Fig. 1

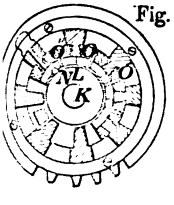

Fig. 2

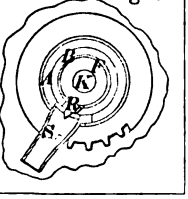

Fig. 3

28163

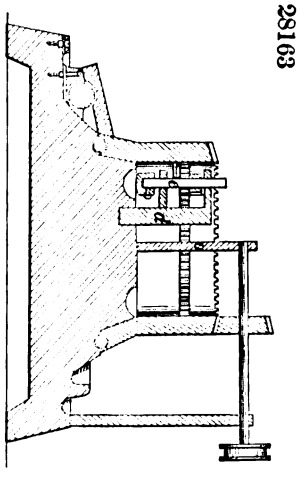

28164

28165

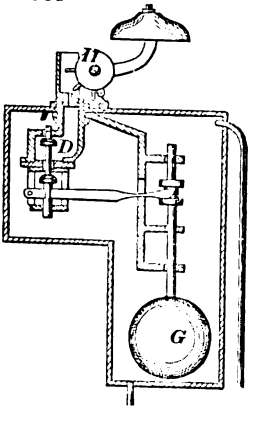

28166

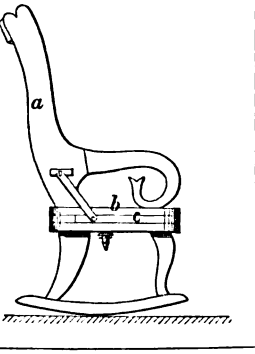

28167

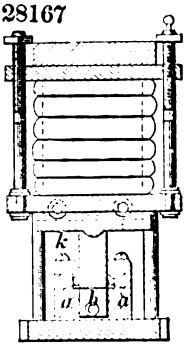

28168

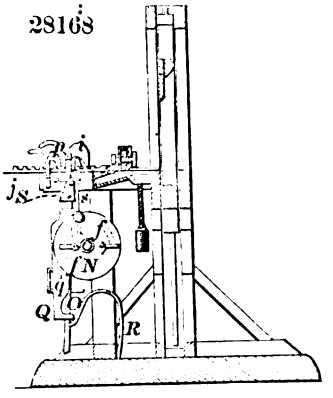

28169

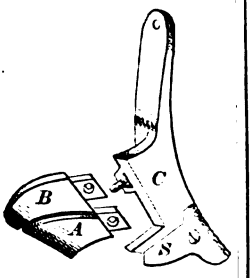

28170

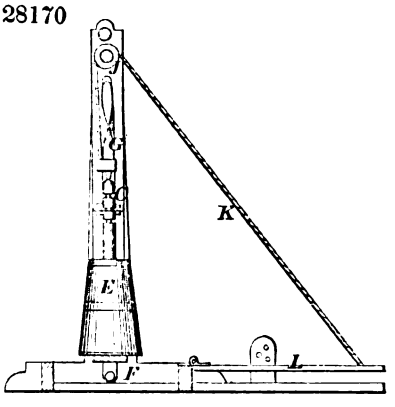

28171

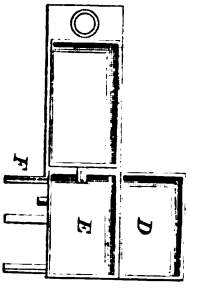

28172

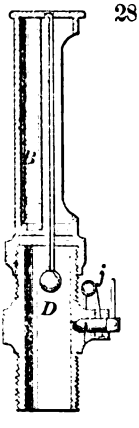

28173

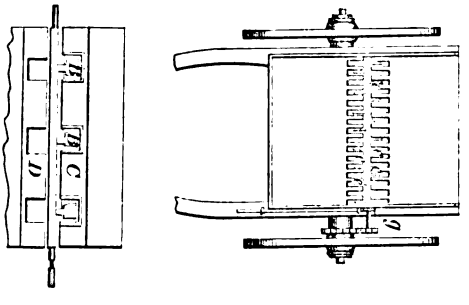

28174

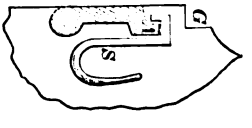

28175

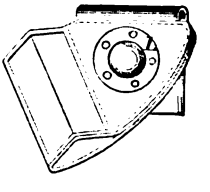

28176

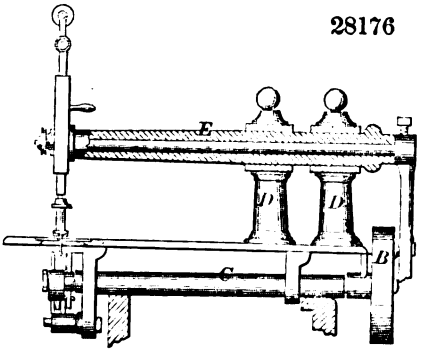

28177

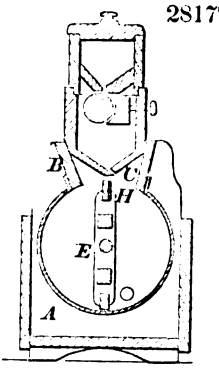

28179

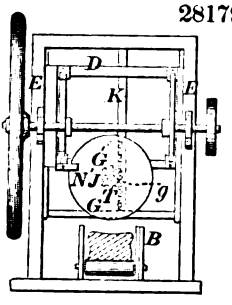

28178

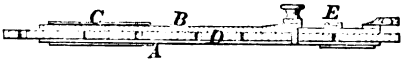

28181

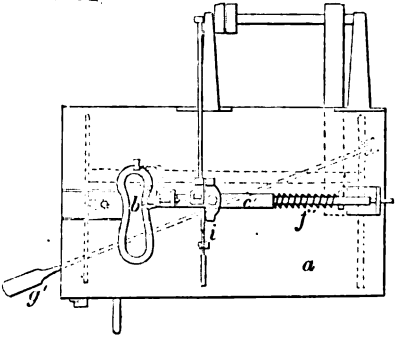

28180

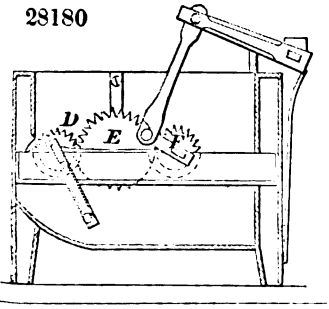

28183

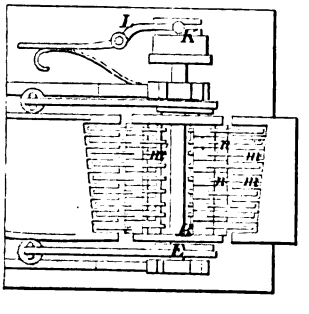

28184

Fig. 1

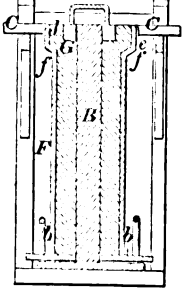

Fig. 2

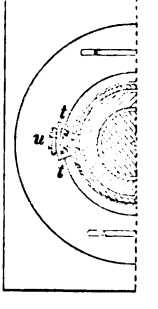

28185

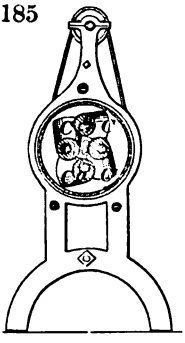

28186

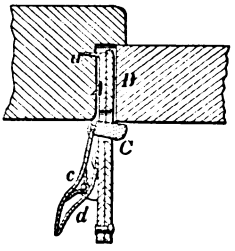

28187

28188

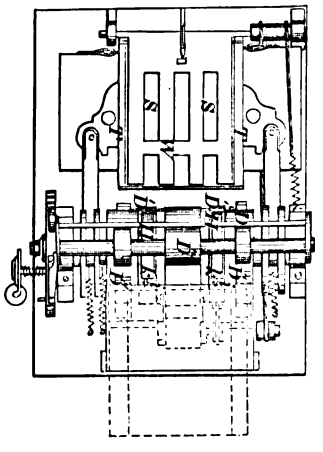

28189

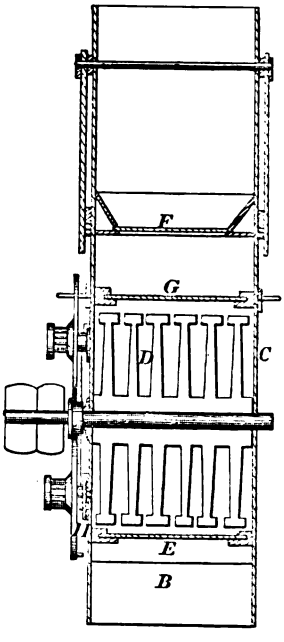

28190

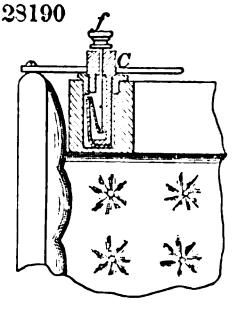

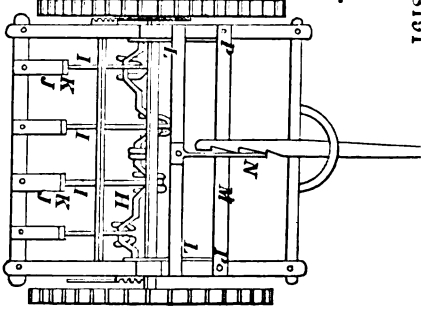

28192

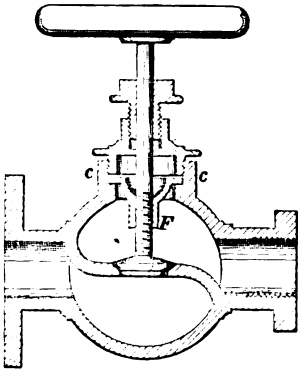

28193

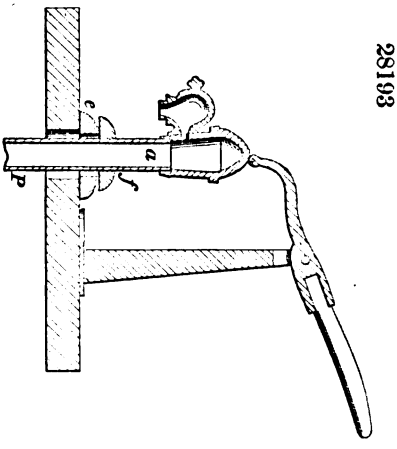

28195

Fig. 1

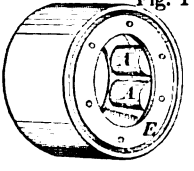

Fig. 2

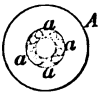

28196

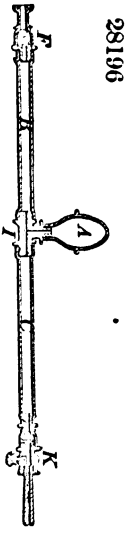

28194

28198

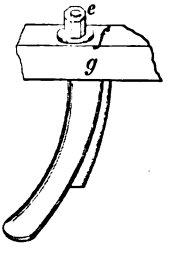

28197

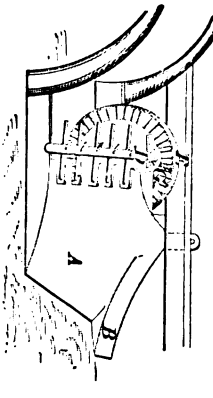

28199

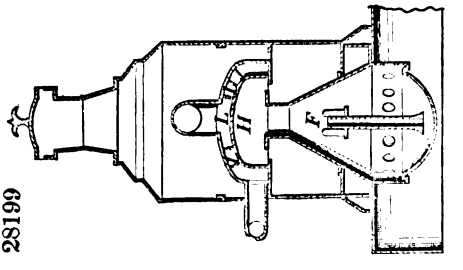

28200

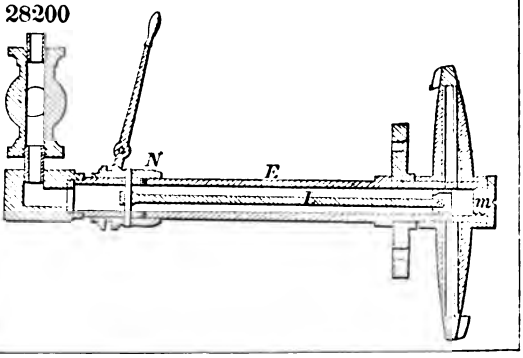

28201

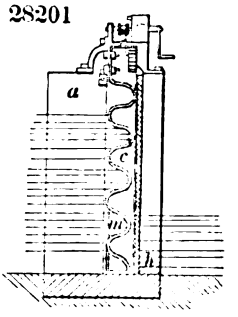

28202

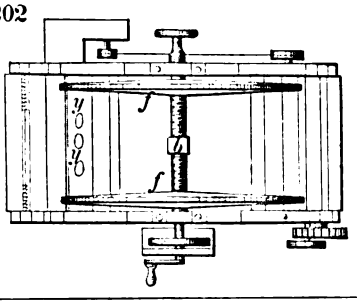

28203

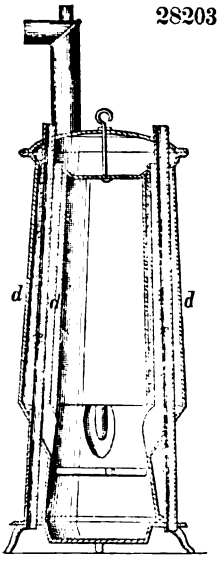

28204

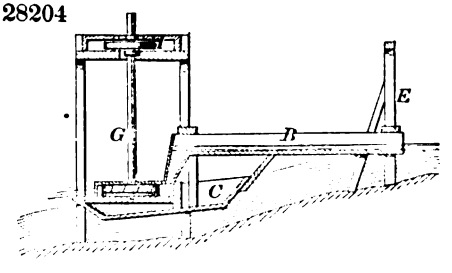

28205

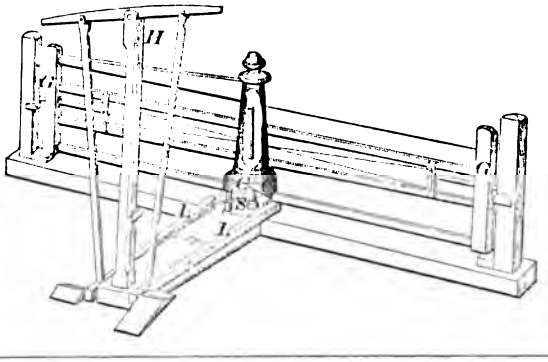

28206

28207

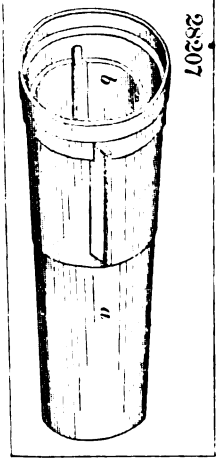

28208

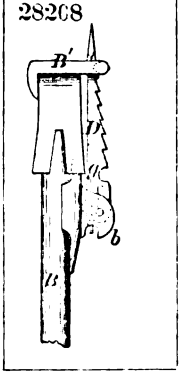

28209

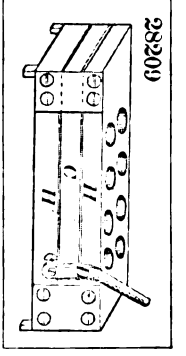

28210

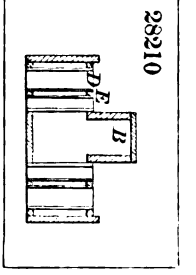

28211

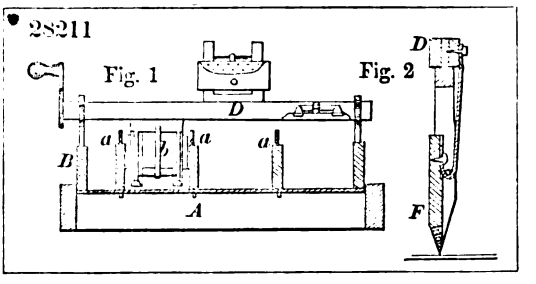

28212

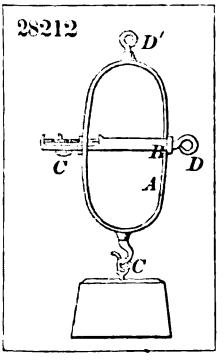

28213

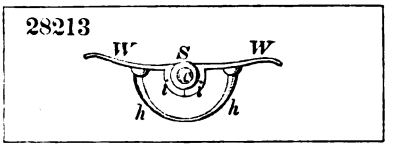

28214

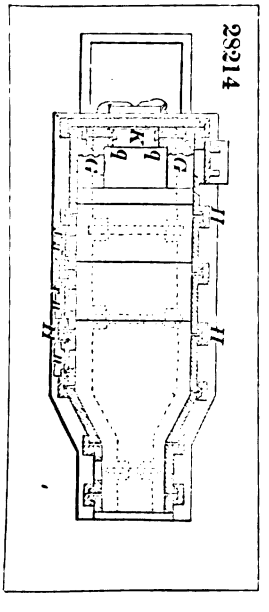

28215

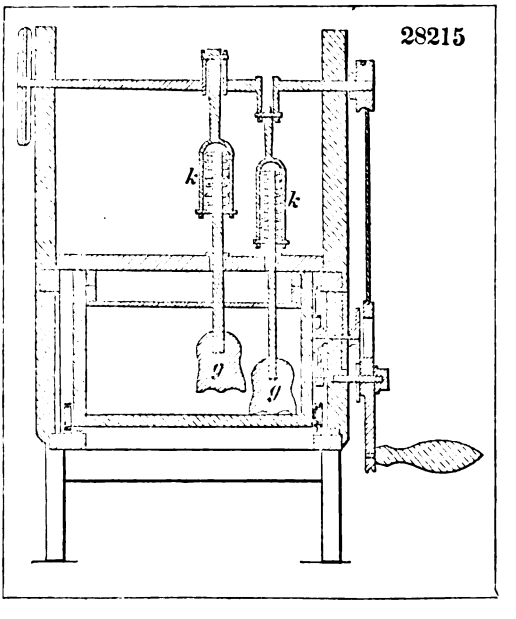

28216

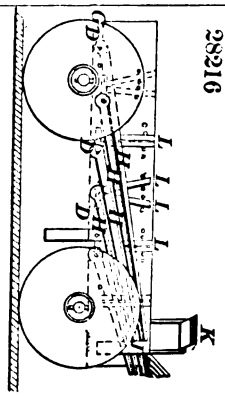

28217

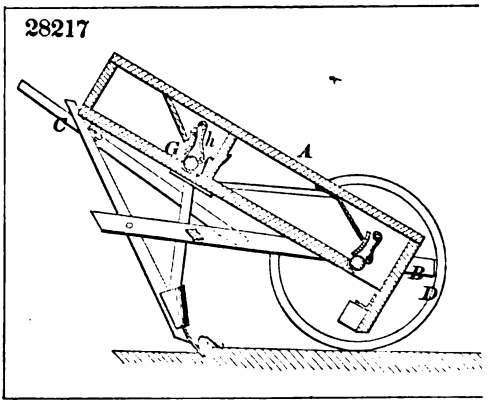

28218

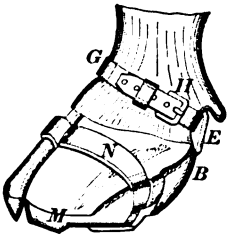

28219

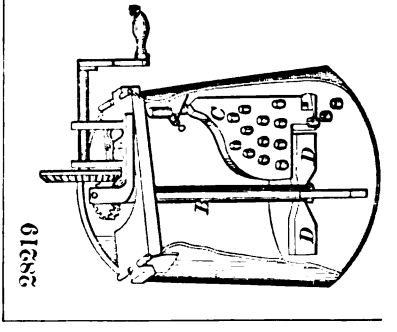

28220

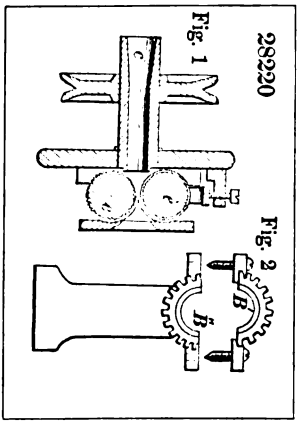

28221

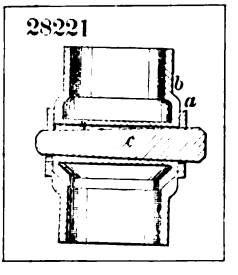

28222

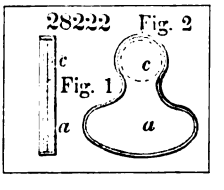

28223

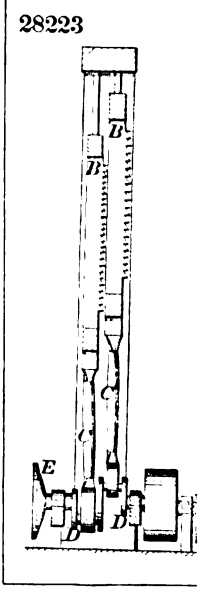

28224

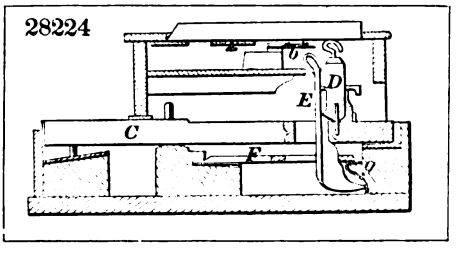

28225

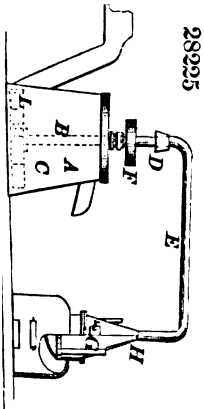

28226

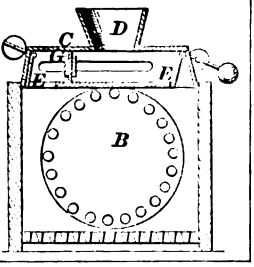

28227

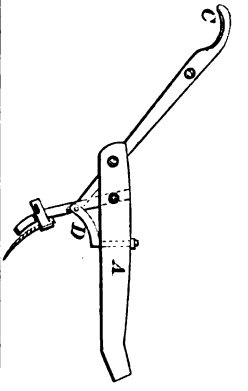

28231

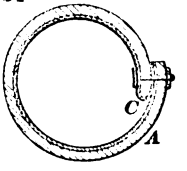

28228

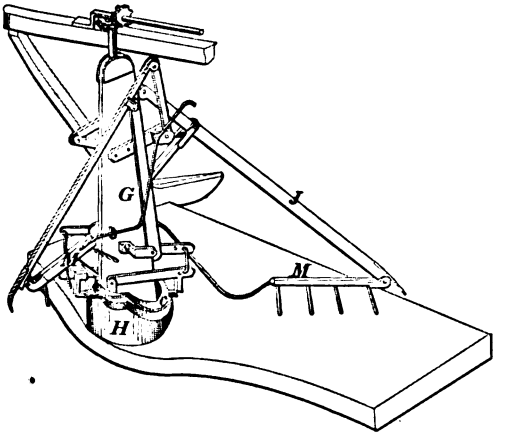

28229

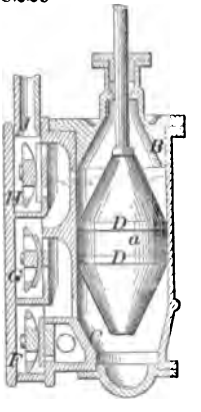

28230

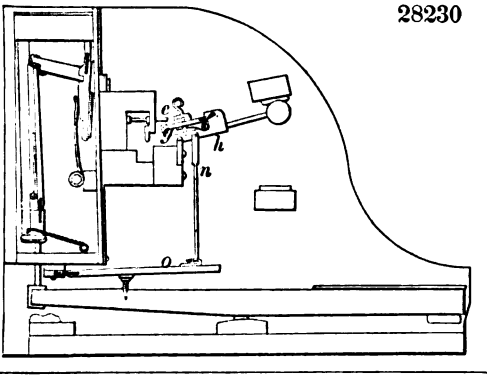

28232

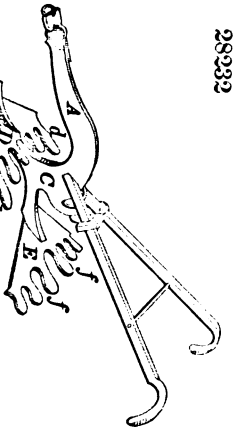

28233

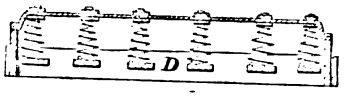

28234

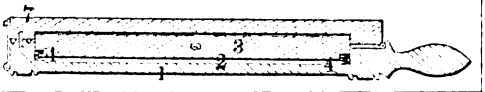

28235

28238

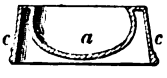

28237

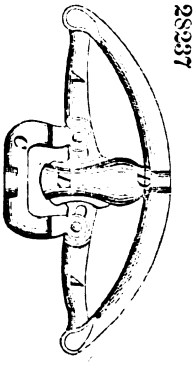

28230

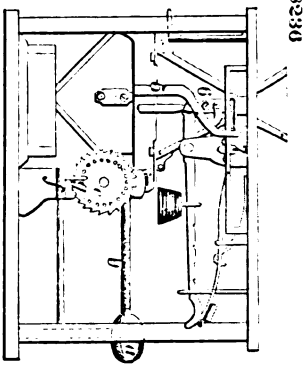

28232

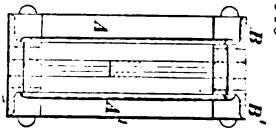

28241

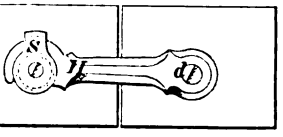

28239

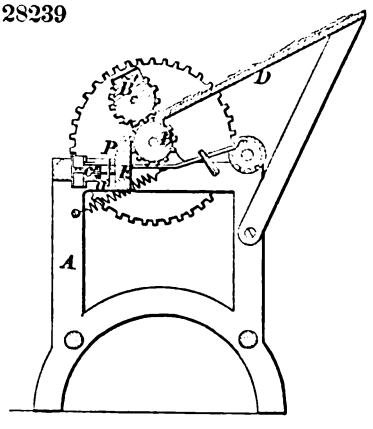

28242

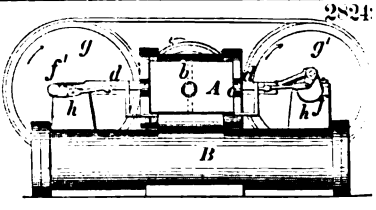

28243

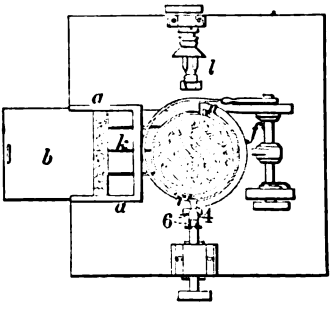

28244

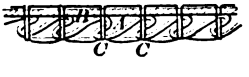

28245

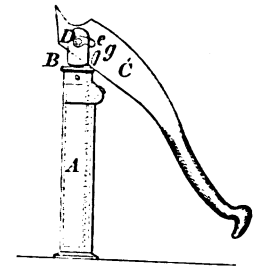

28246

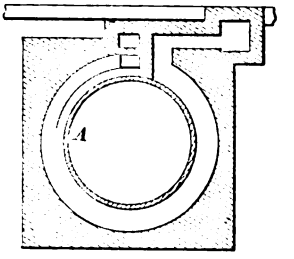

28247

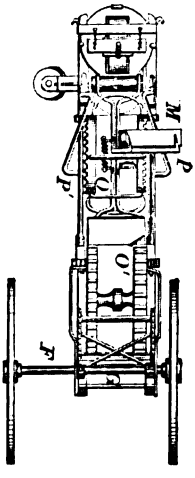

28248

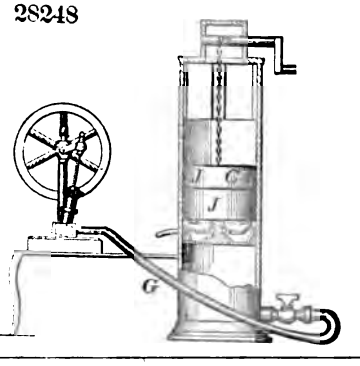

28249

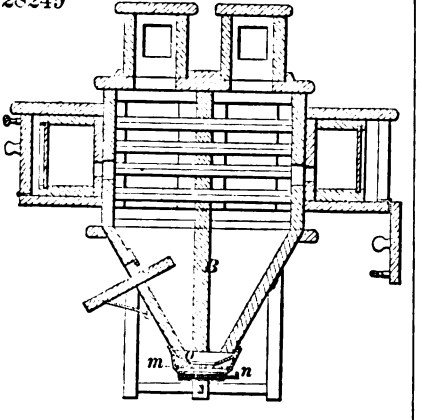

28251

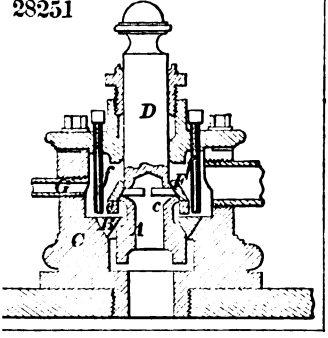

28252

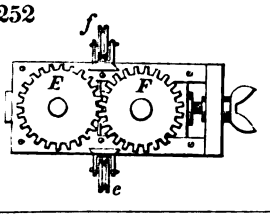

28250

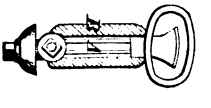

28253

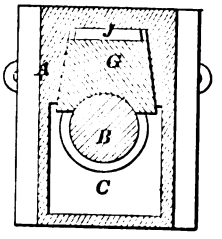

28254

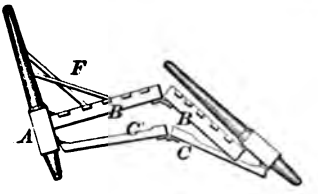

28255

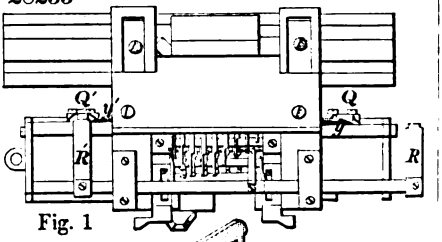

Fig. 1

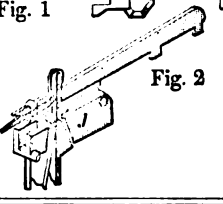

Fig. 2

28256

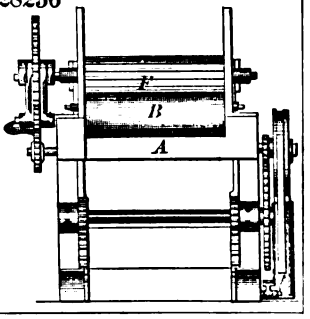

28257

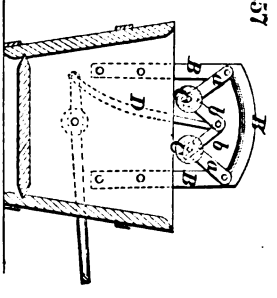

28259

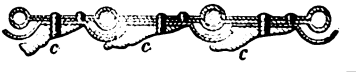

28258

28260

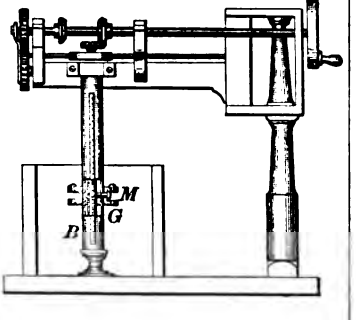

28261

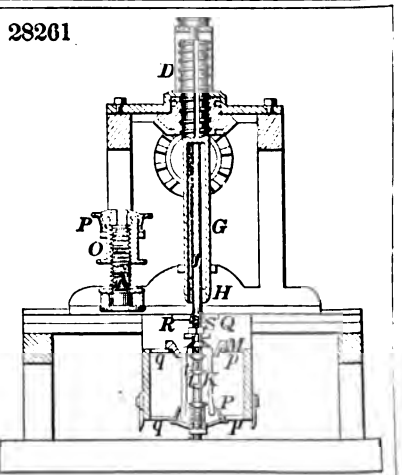

28262

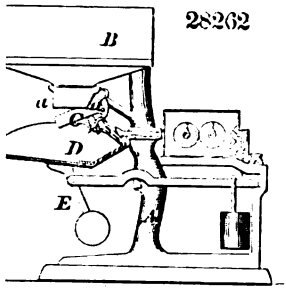

28263

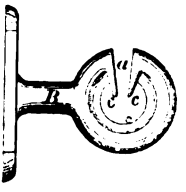

28264

66

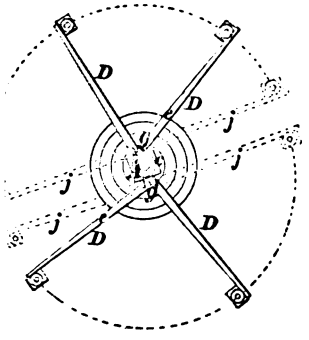

28265

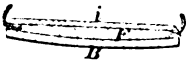

28267

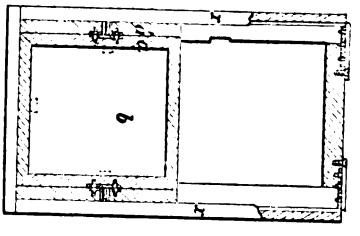

28268

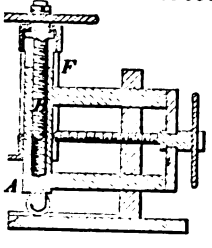

28269

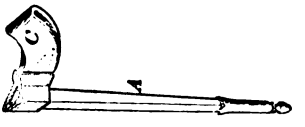

28270

71

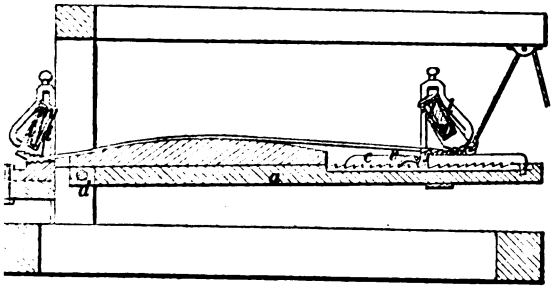

28272

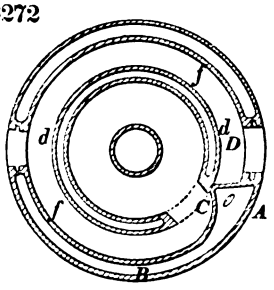

28273

Fig. 2

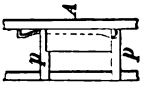

Fig. 1

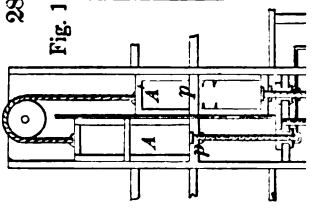

28274

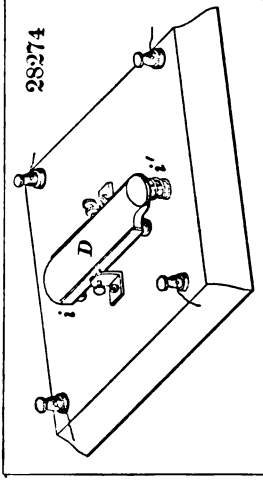

28275

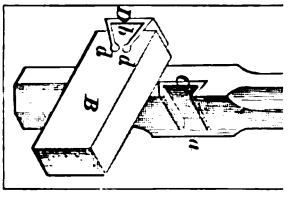

28277

Fig. 2

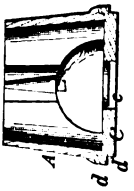

Fig. 1

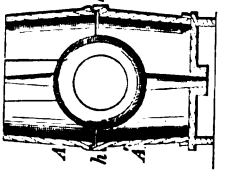

Fig. 1

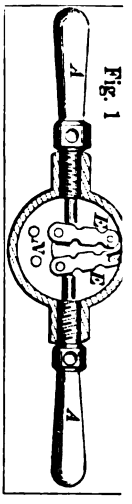

28278

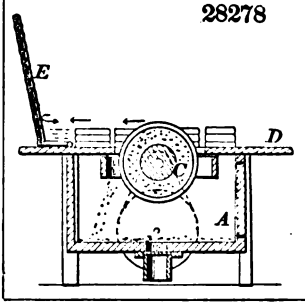

28280

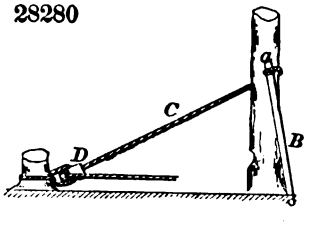

28281

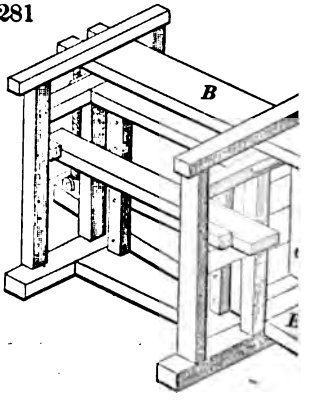

28282

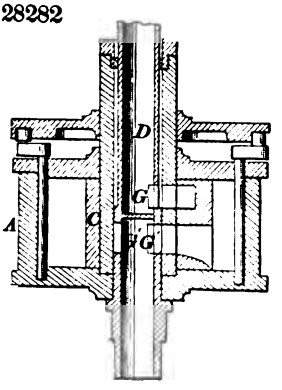

28283

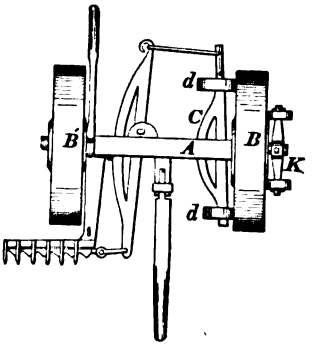

28285

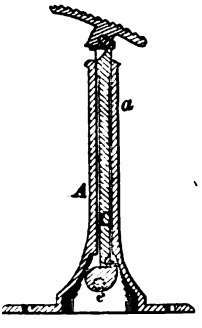

28284

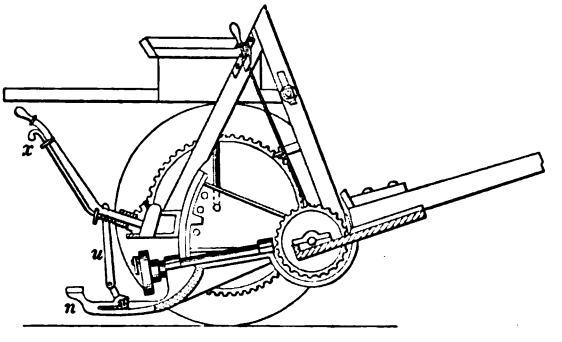

28286

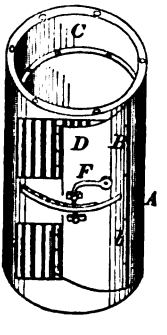

28287

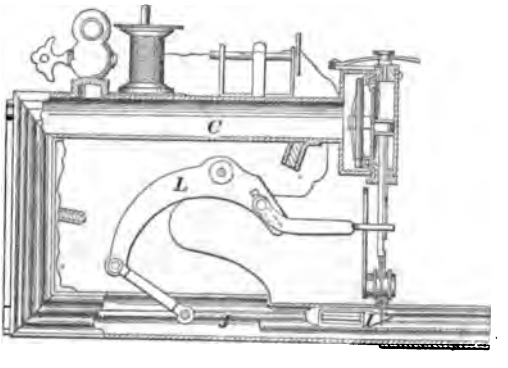

28288

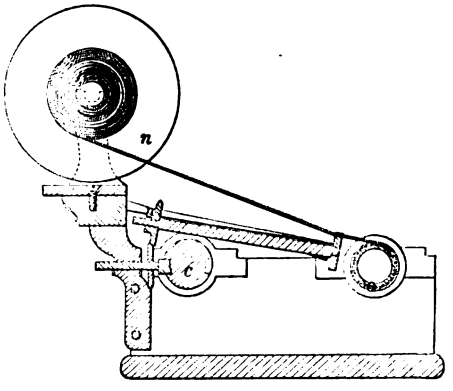

28291

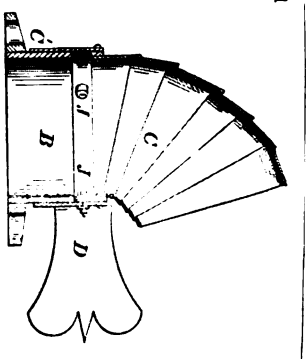

28290

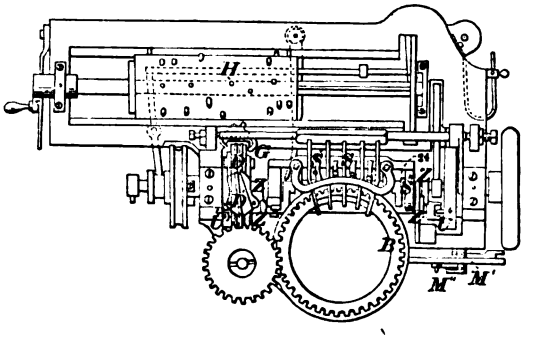

28293

28294

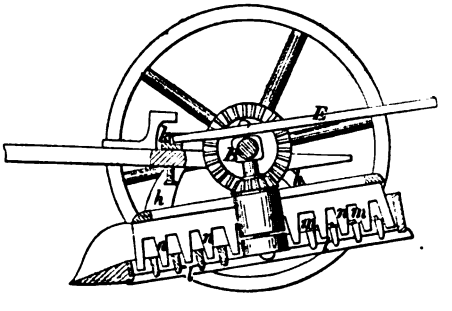

28295

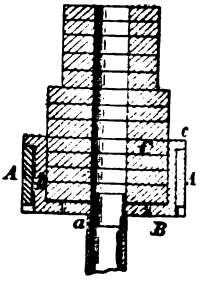

28296

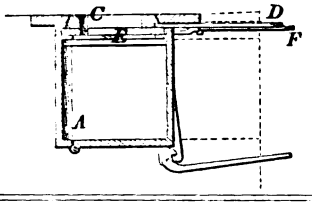

28297

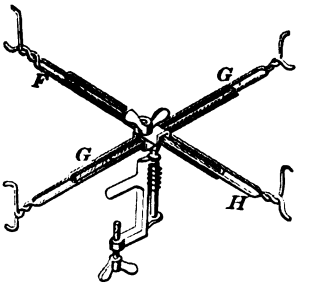

28298

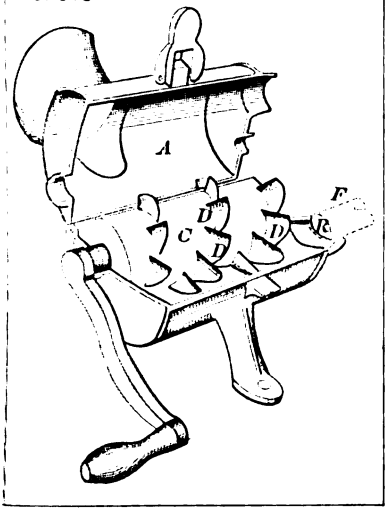

28299

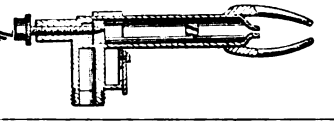

28300

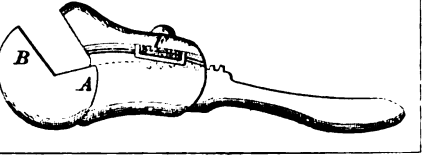

28301

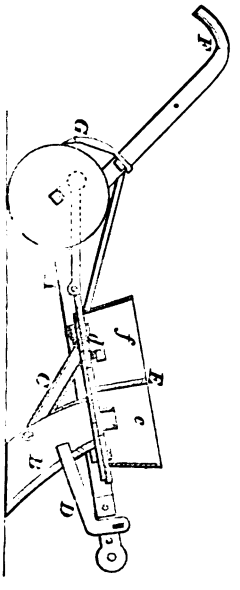

28302

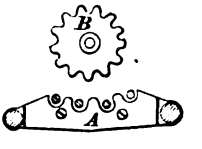

28303

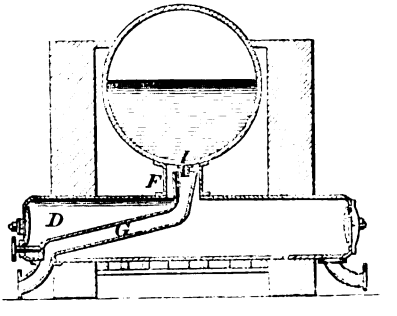

28304

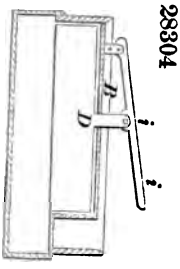

28305

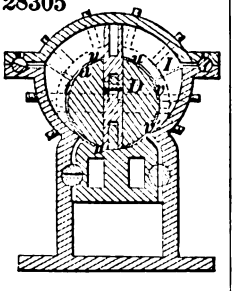

28306

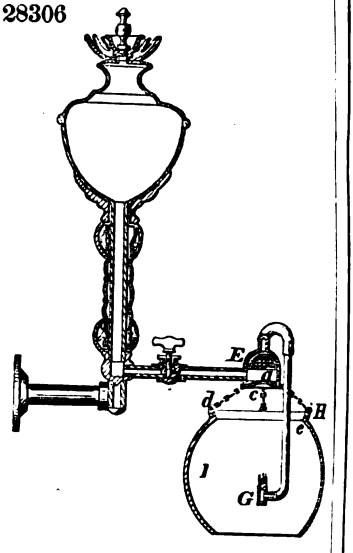

28307

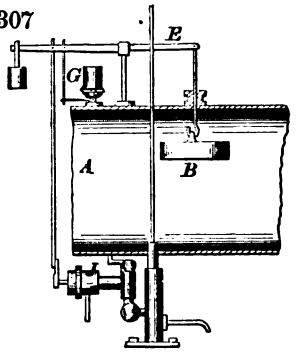

28308

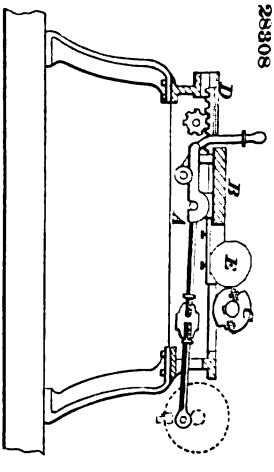

28309

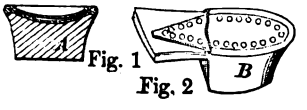

Fig. 1

Fig. 2

28310

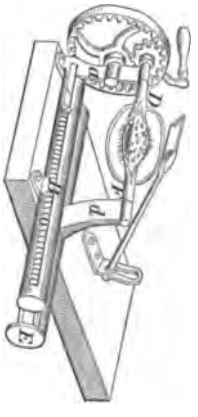

28311

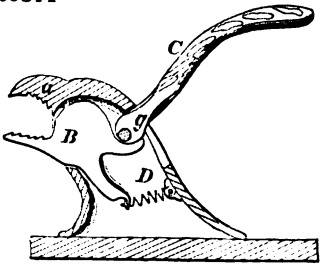

28312

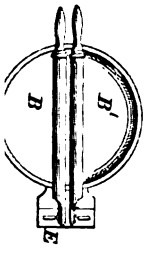

28313

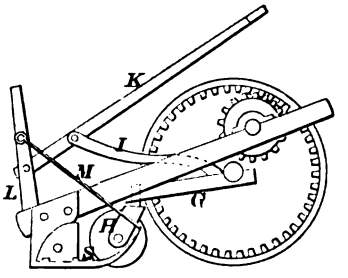

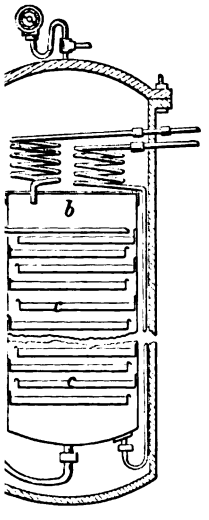

28314

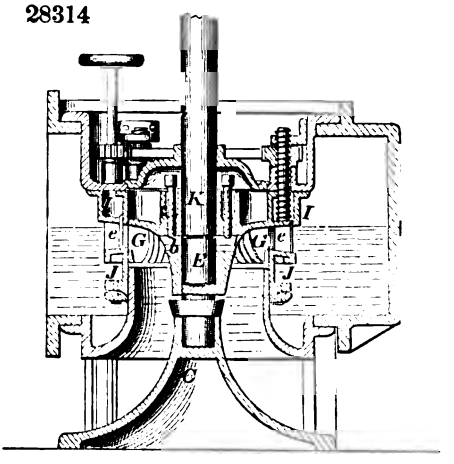

6

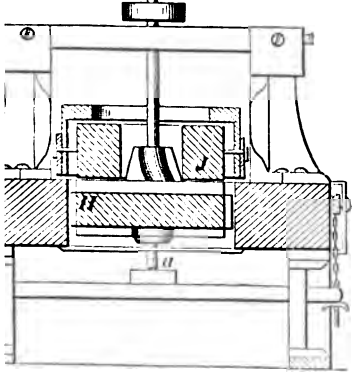

28317

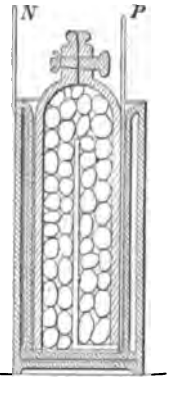

28318

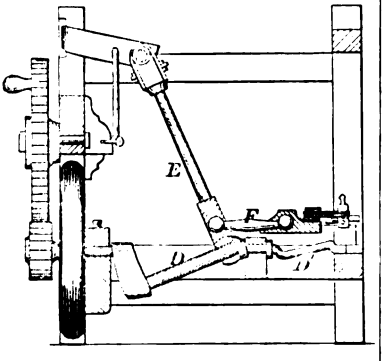

28319

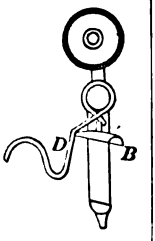

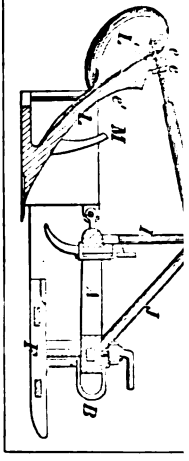

28322

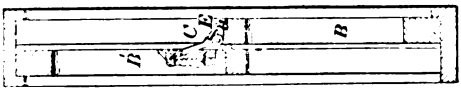

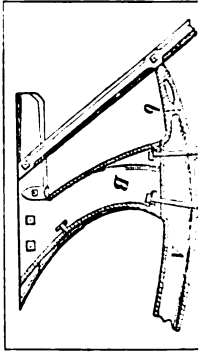

28321

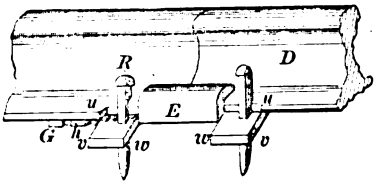

28324

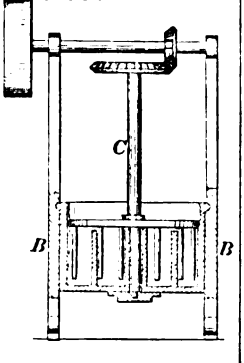

28325

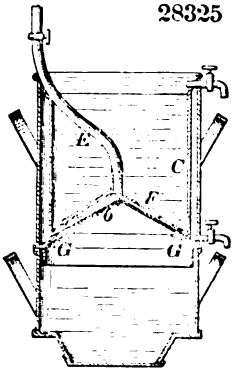

28326

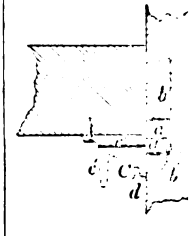

28327

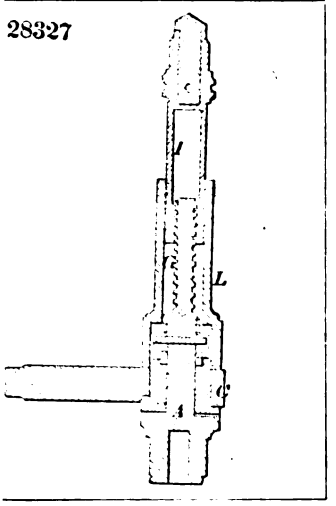

28328

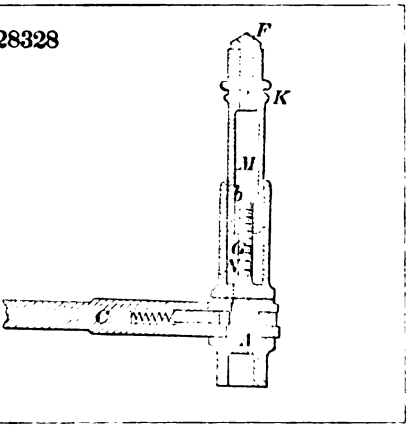

28329

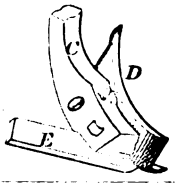

28331

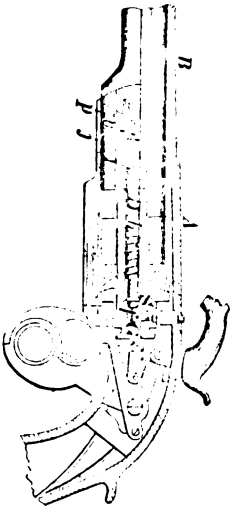

28332

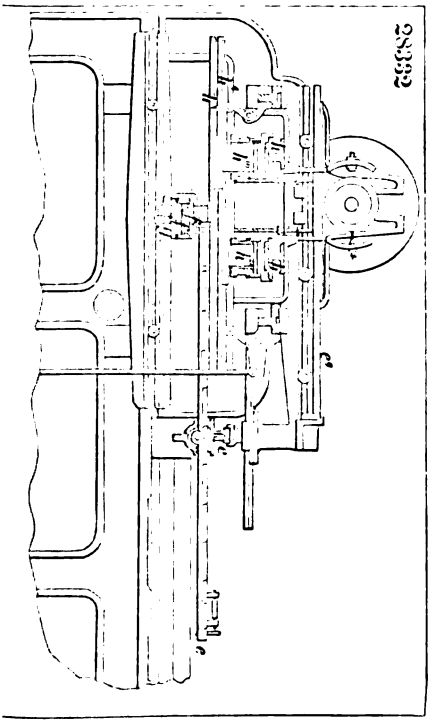

28330

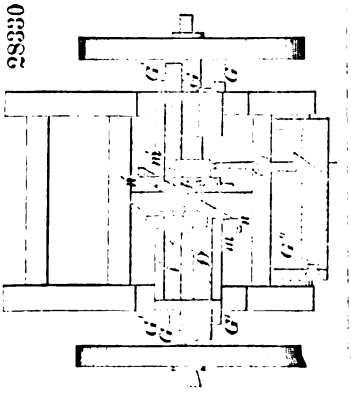

28333

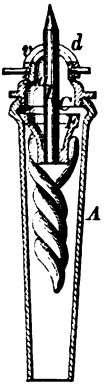

28334

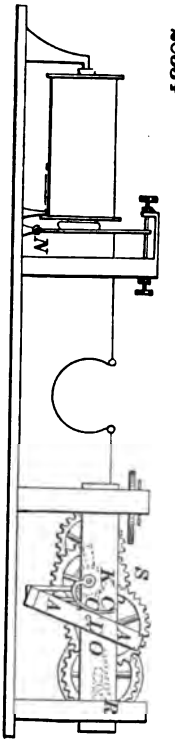

28335

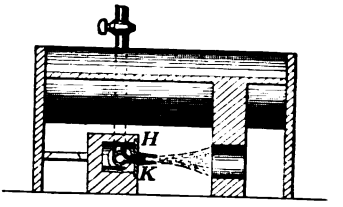

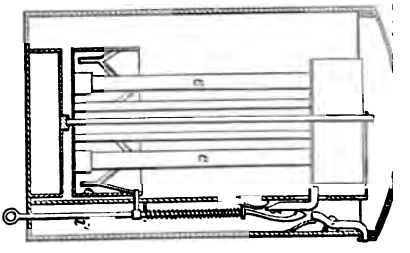

28337

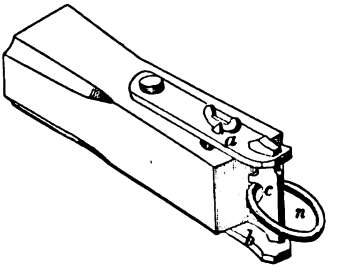

28339

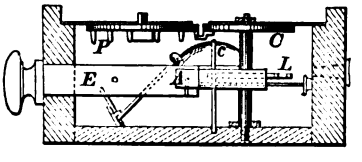

28338

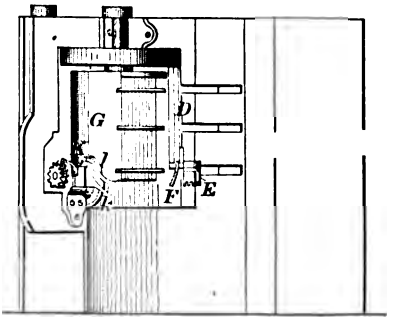

28340

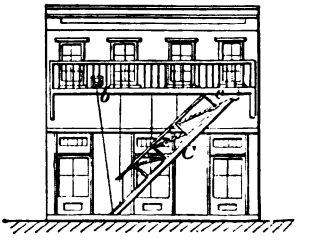

28341

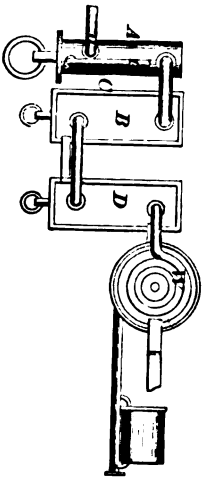

28342

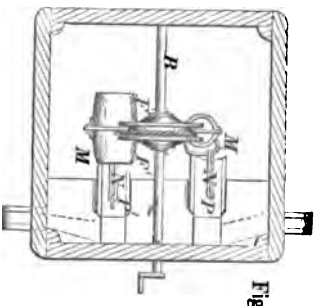

Fig. 1

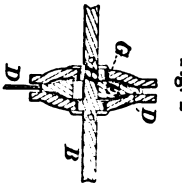

Fig. 2

28343

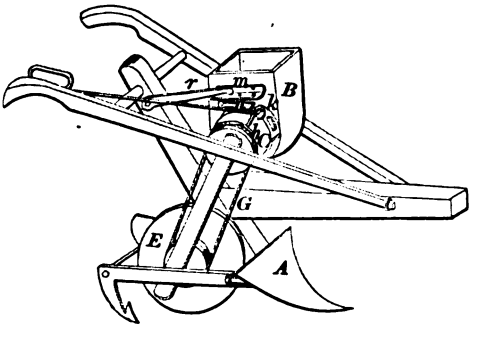

28344

28345

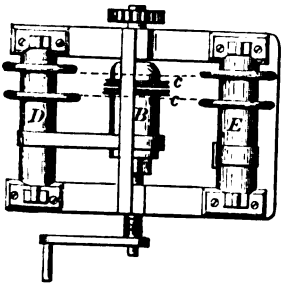

28346

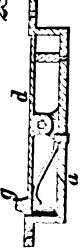

28347

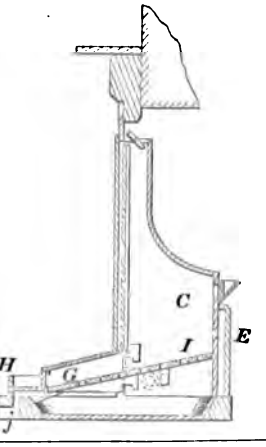

28348

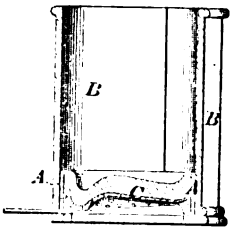

28351

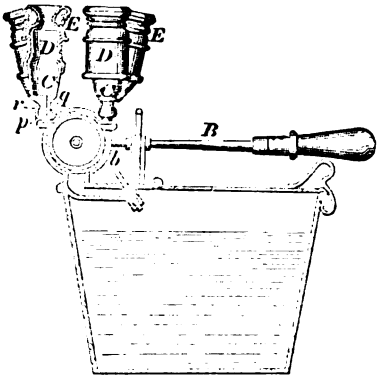

28349

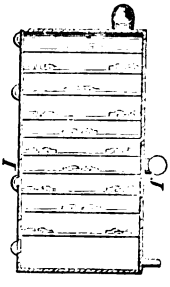

28352

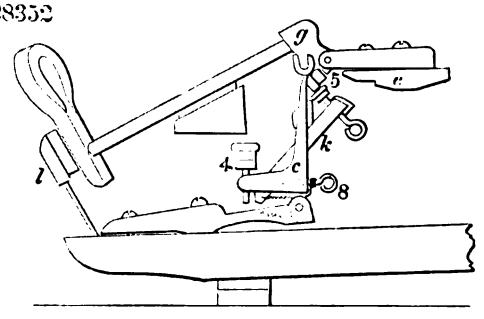

28354

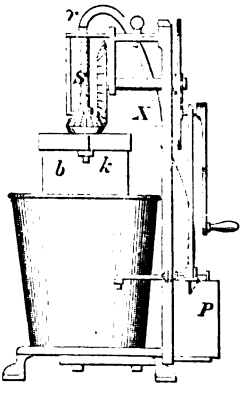

28353

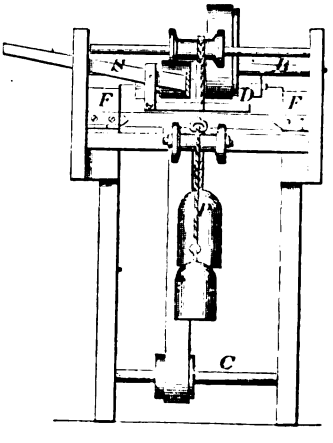

28355

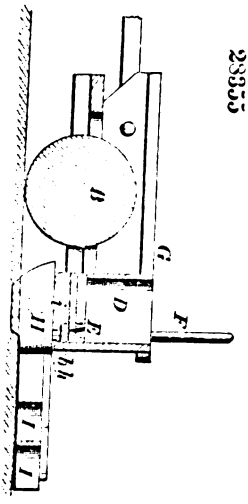

28356

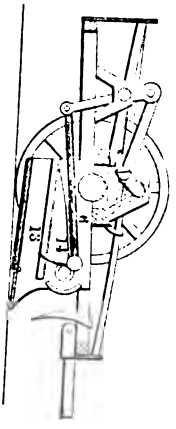

28358

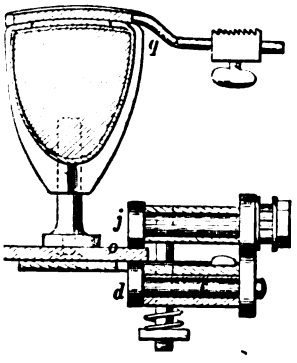

28357

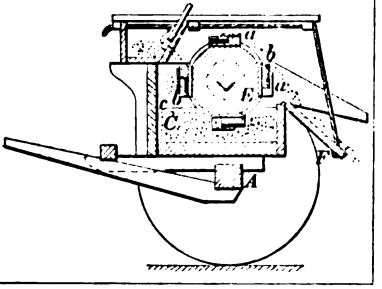

28360

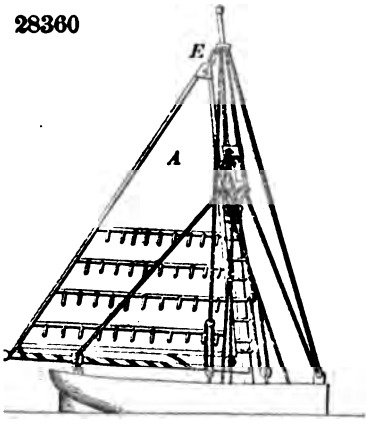

28359

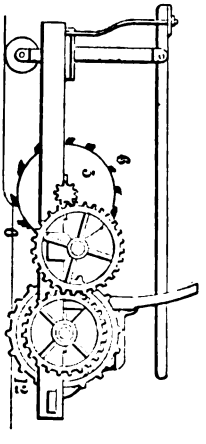

28361

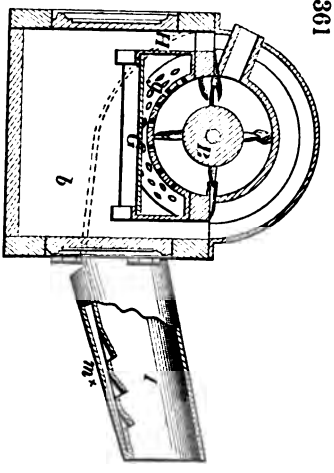

28362

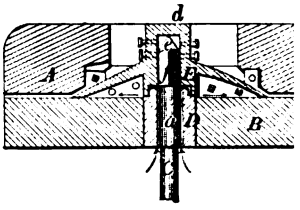

28363

Fig. 1

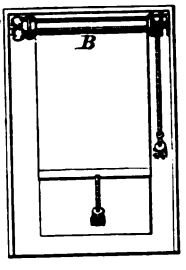

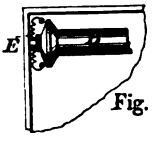

Fig. 2

28365

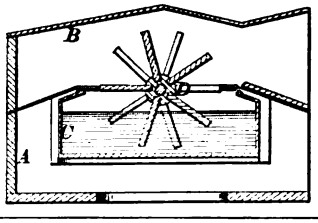

28364

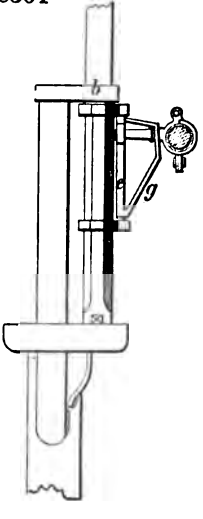

28366

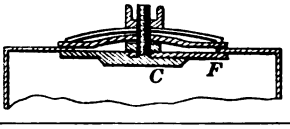

28367

Fig. 1

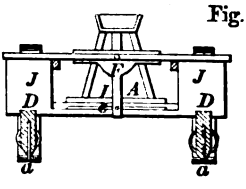

Fig. 2

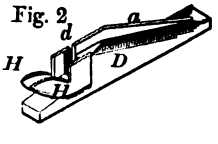

28368

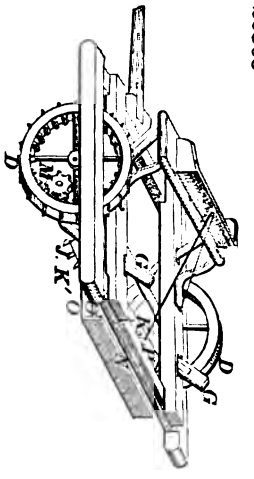

28369 Fig. 1

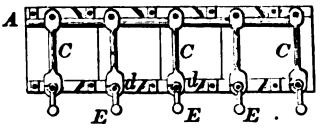

Fig. 2

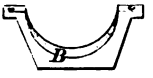

28371

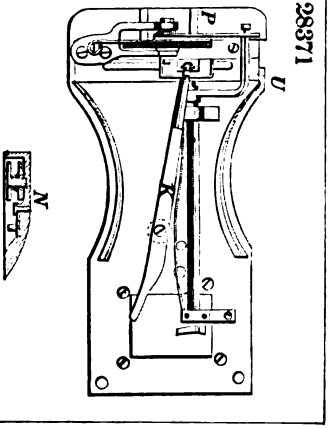

28372

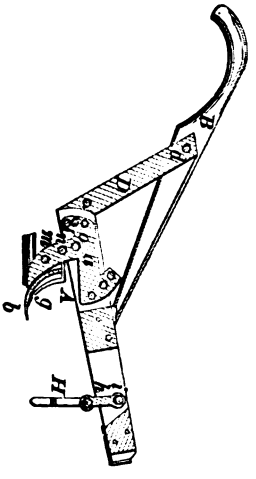

28373

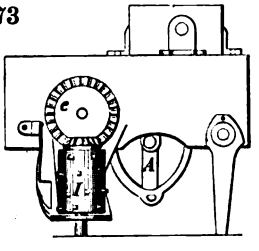

28374

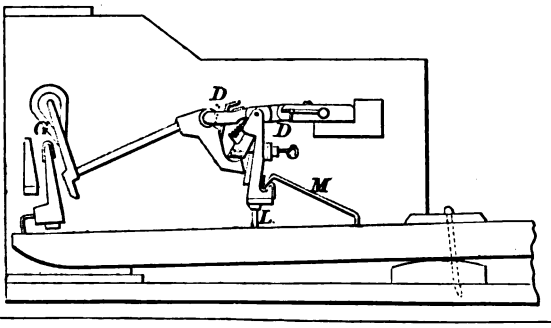

28375

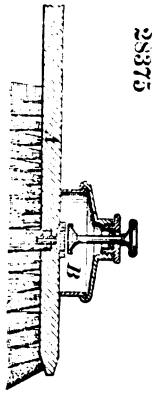

28376

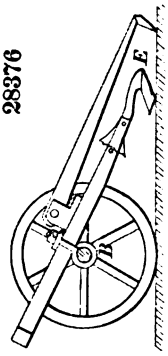

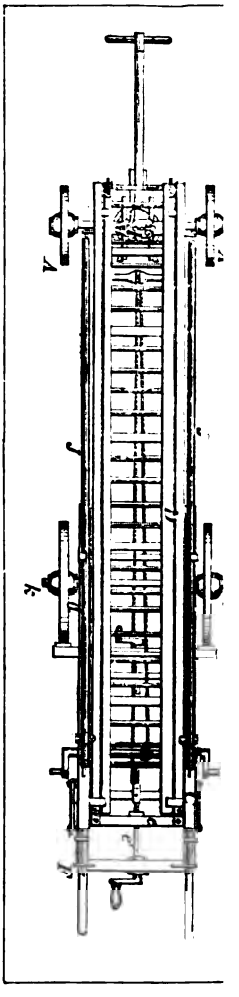

28380

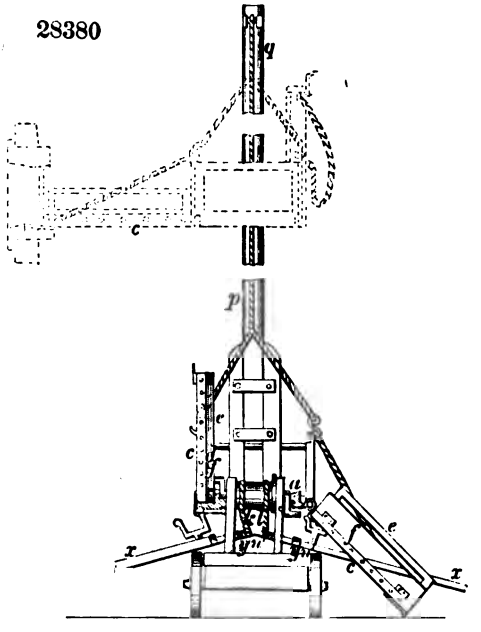

28379

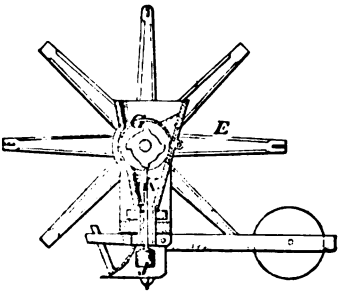

28377

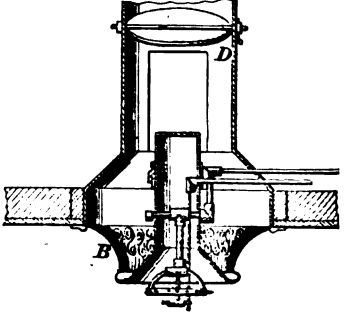

28381

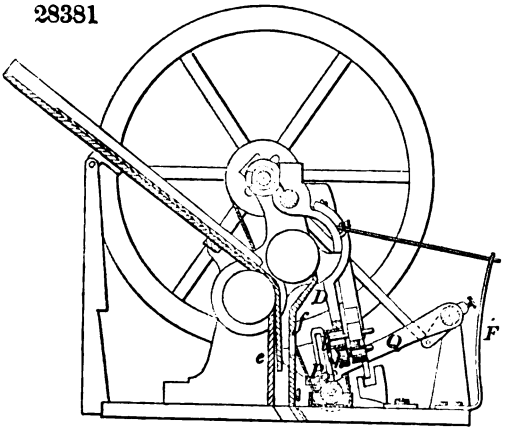

28384

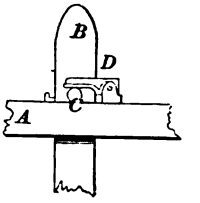

28382

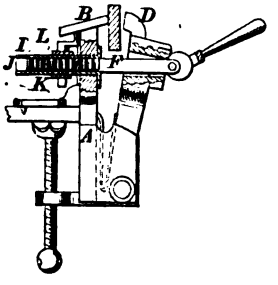

28383

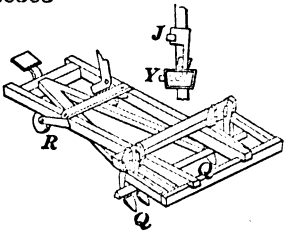

28385

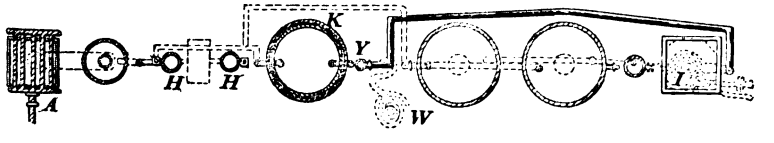

28386

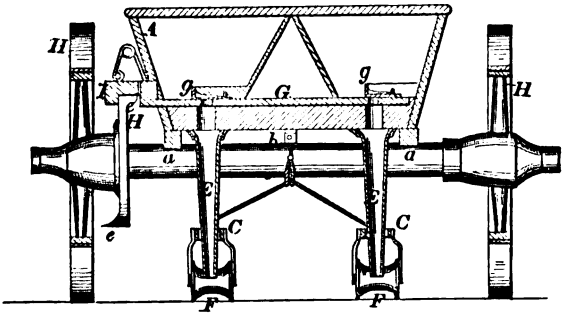

28387

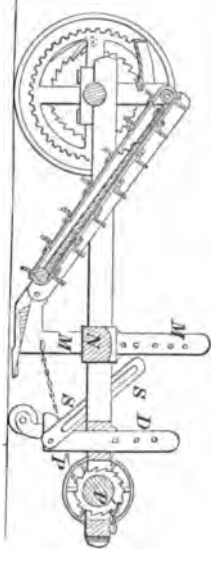

28389

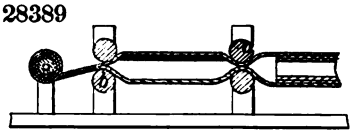

28390

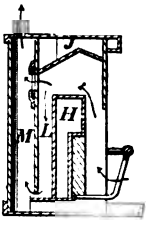

28391

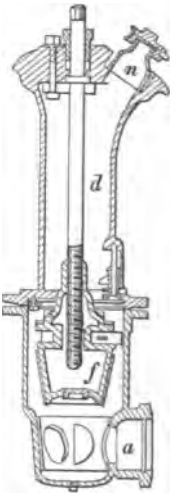

28392

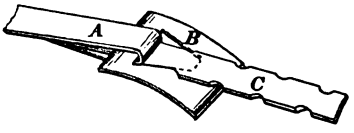

28394

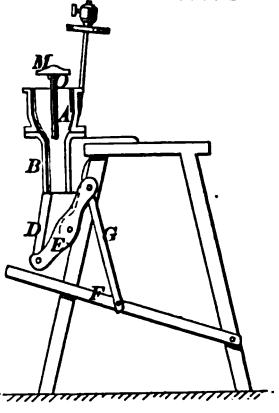

28393

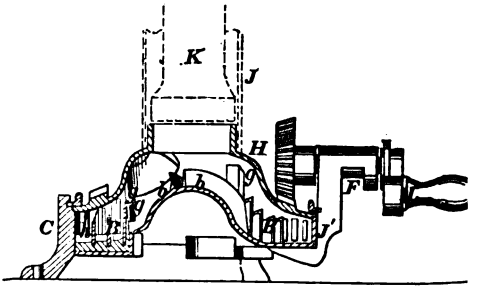

28396

28395

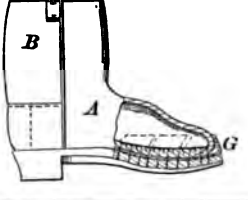

28397

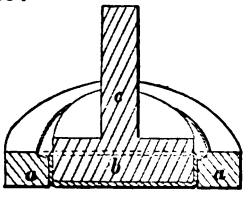

28398

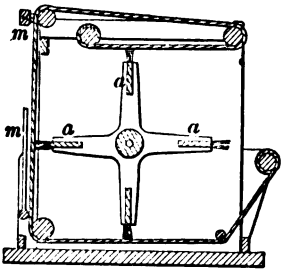

28399

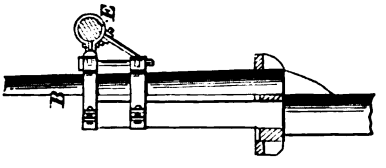

28400

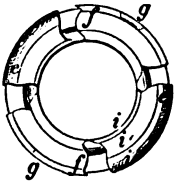

28401

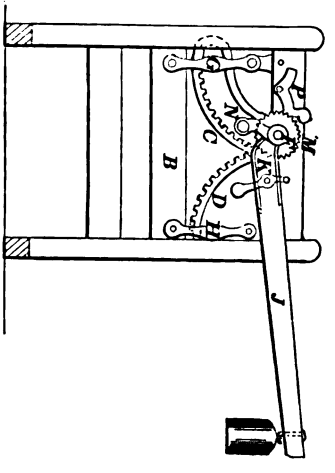

28402

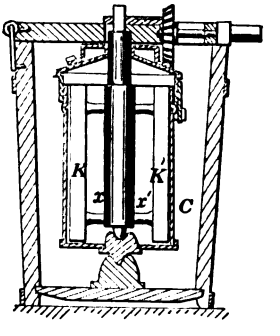

28403

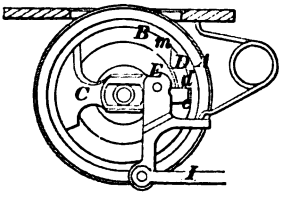

28404

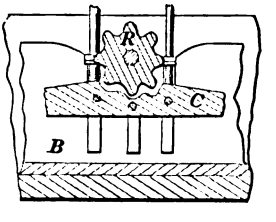

28405

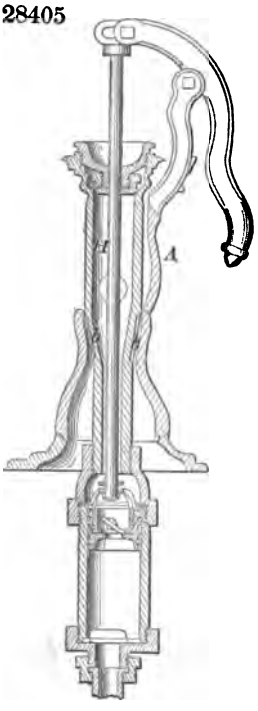

28406

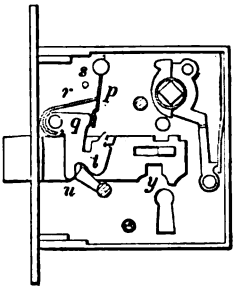

28407

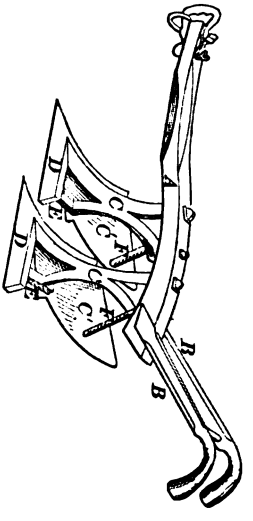

28408

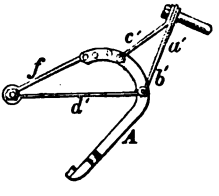

28409

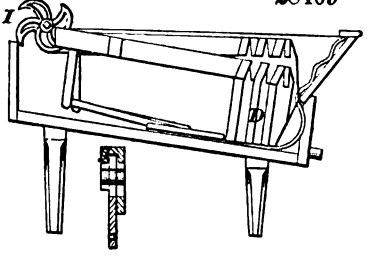

28410

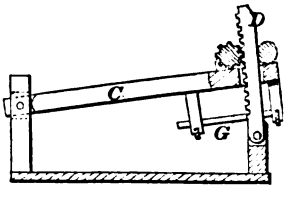

28411

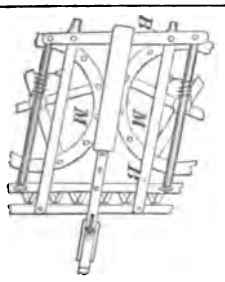

28412

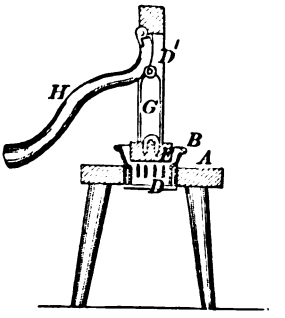

28413

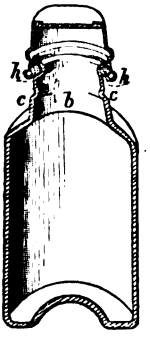

28414

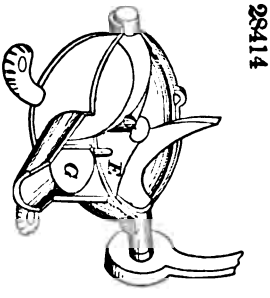

28415

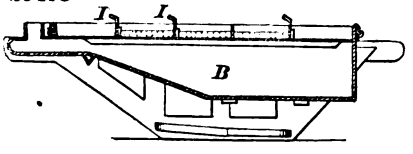

28416

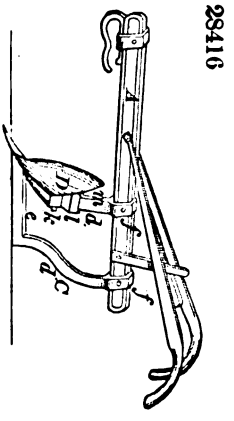

28417

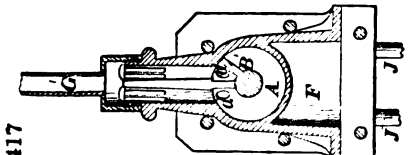

28418

Fig. 1

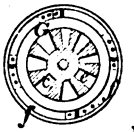

Fig. 2

28419

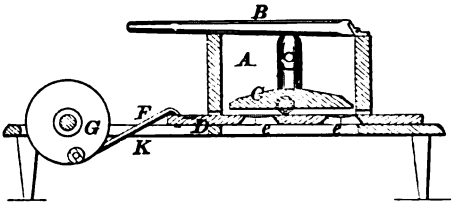

28422

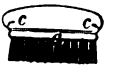

28421

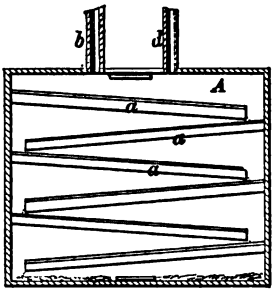

28423

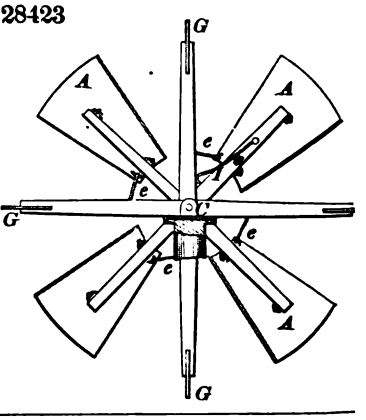

28425

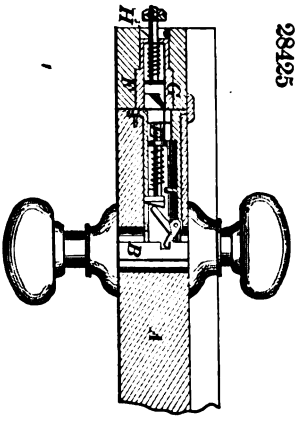

28424

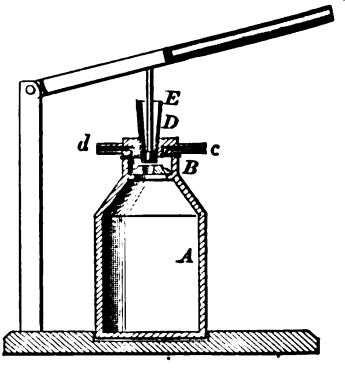

28426

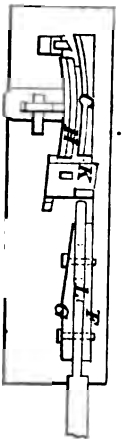

28427

Fig. 3

Fig. 1

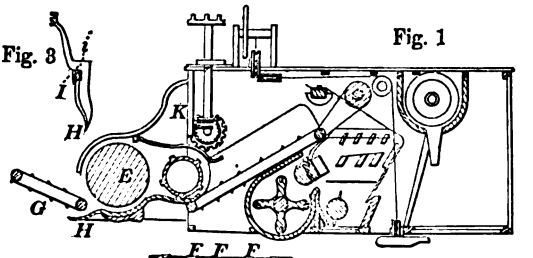

Fig. 2

28428

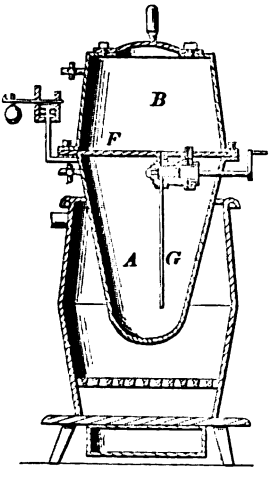

28429

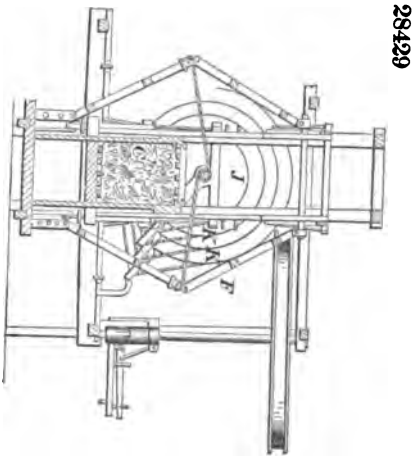

28430

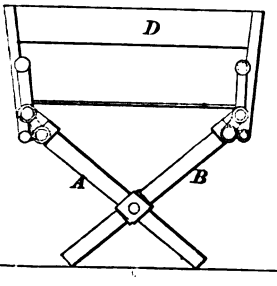

28431

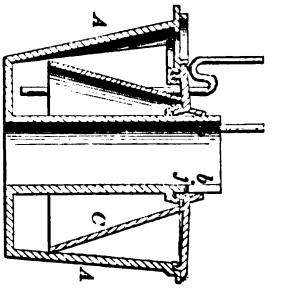

28432

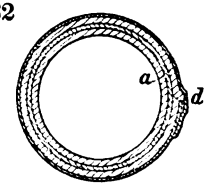

28433

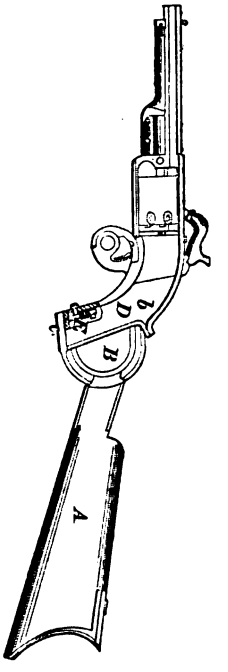

28434

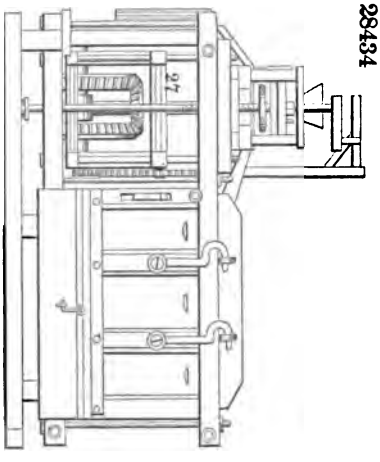

28435

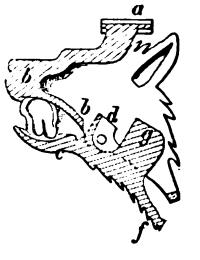

28436

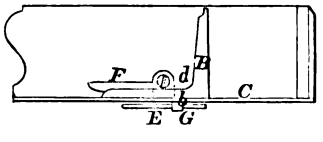

28437

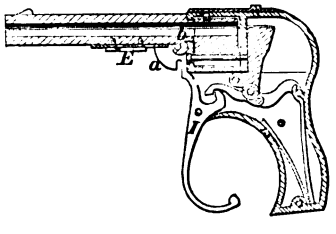

28438

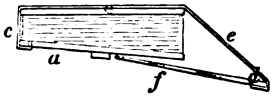

28439

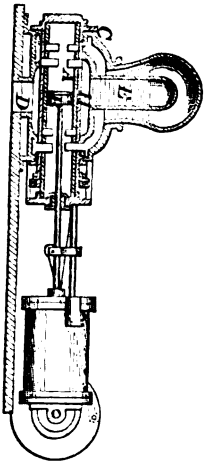

28440

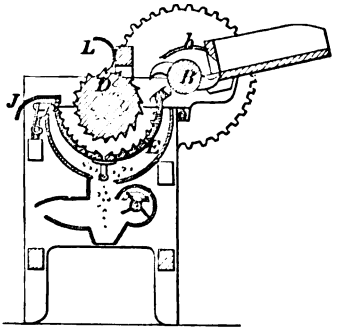

28442

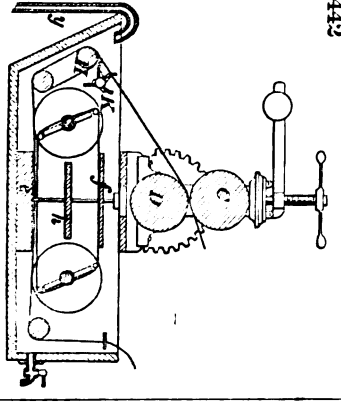

28445

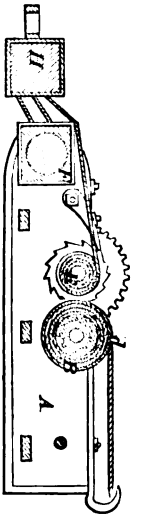

28443

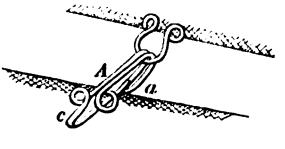

28444

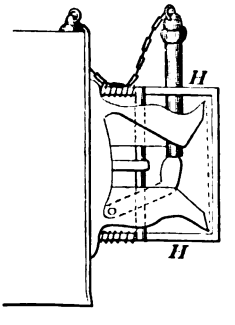

28448

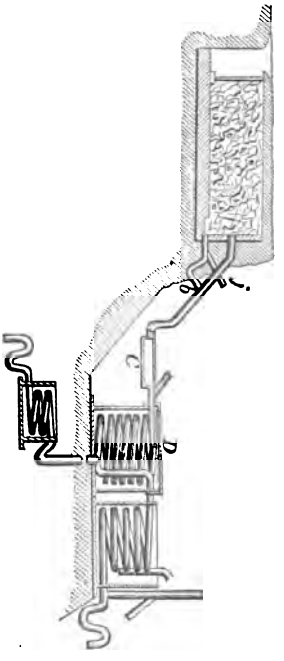

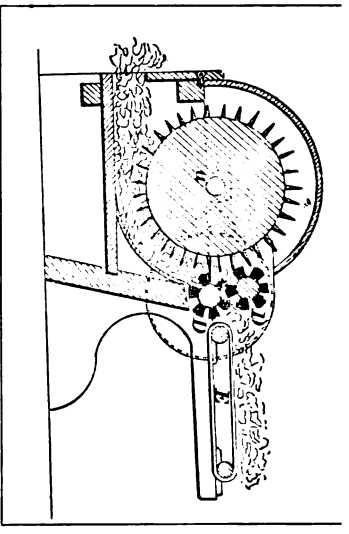

28449

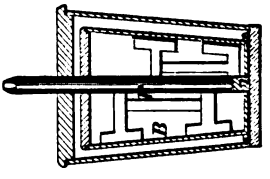

28450

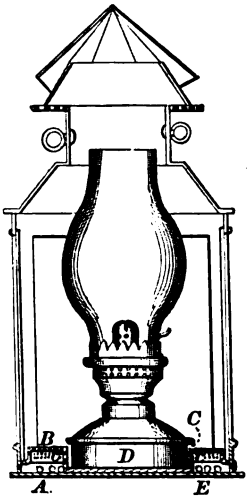

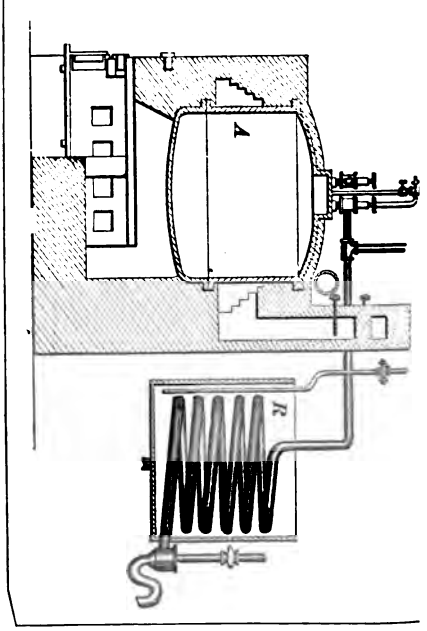

28451

28454 Fig. 1

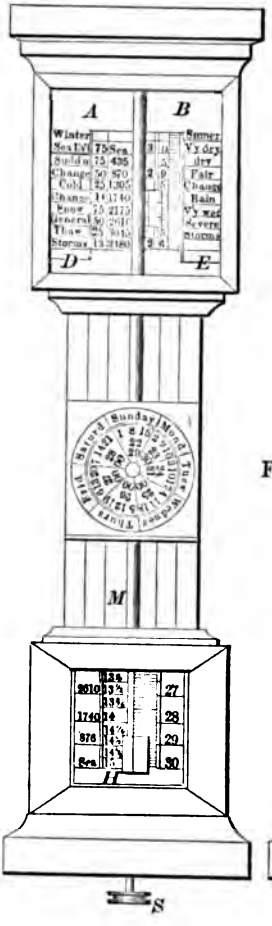

Fig. 3

Fig. 2

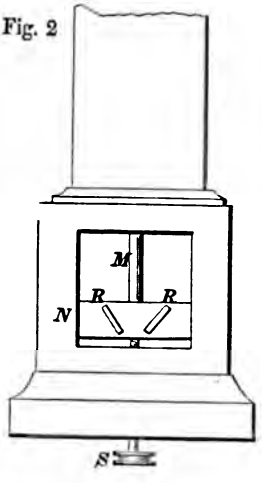

3452

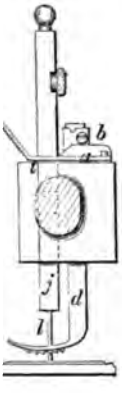

28453

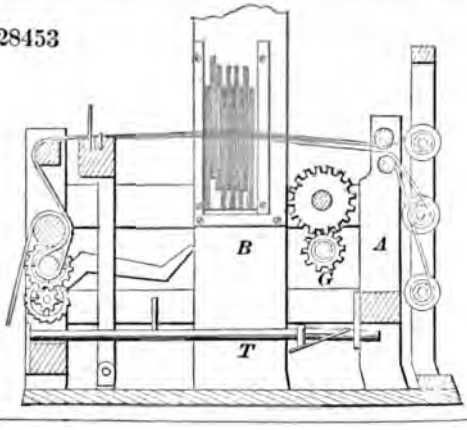

28455

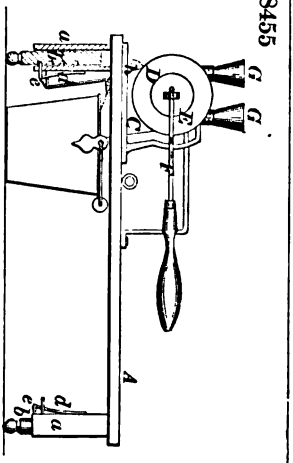

28457

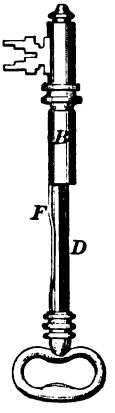

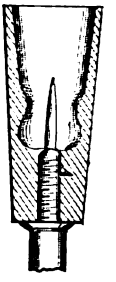

28460

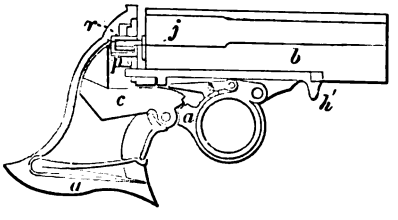

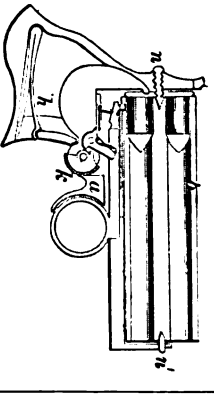

28462

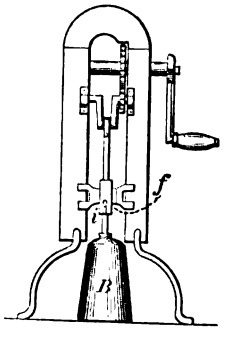

28463

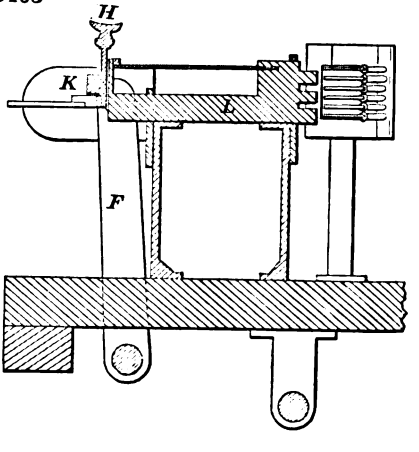

28465

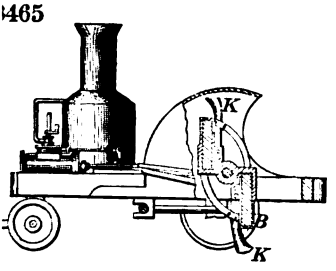

28466

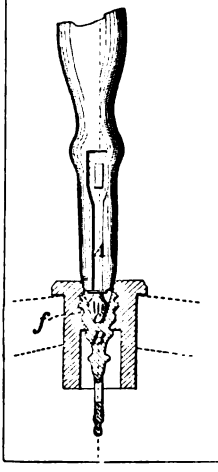

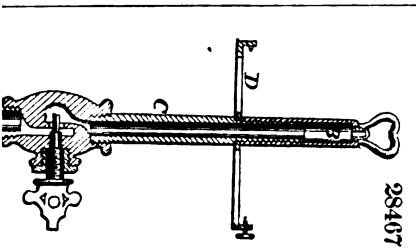

69

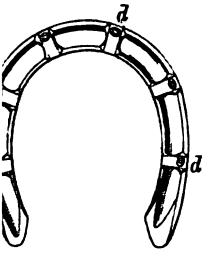

28468

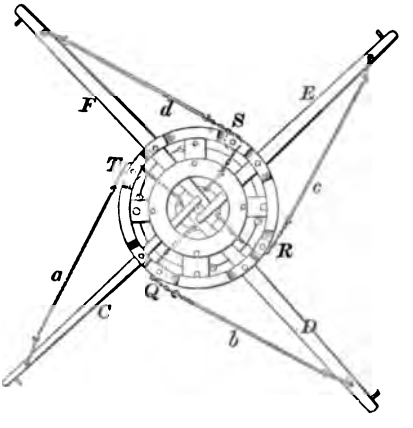

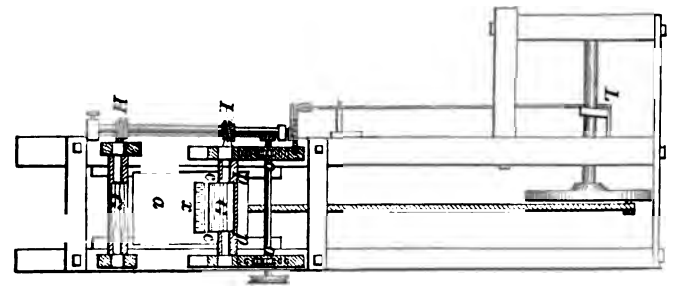

28471

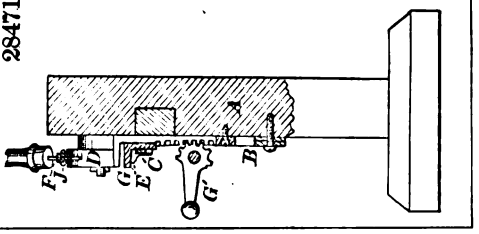

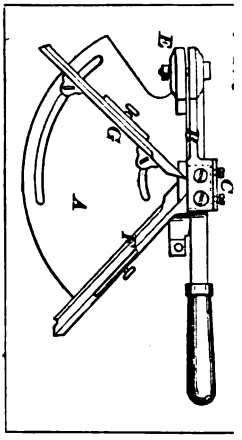

28477

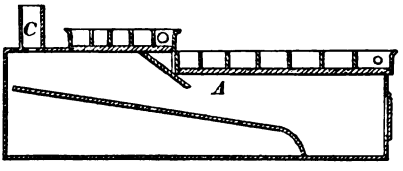

28473

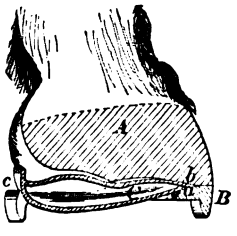

28474 Fig. 1

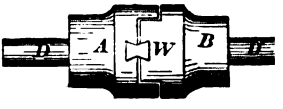

Fig. 2

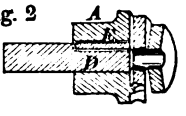

28475

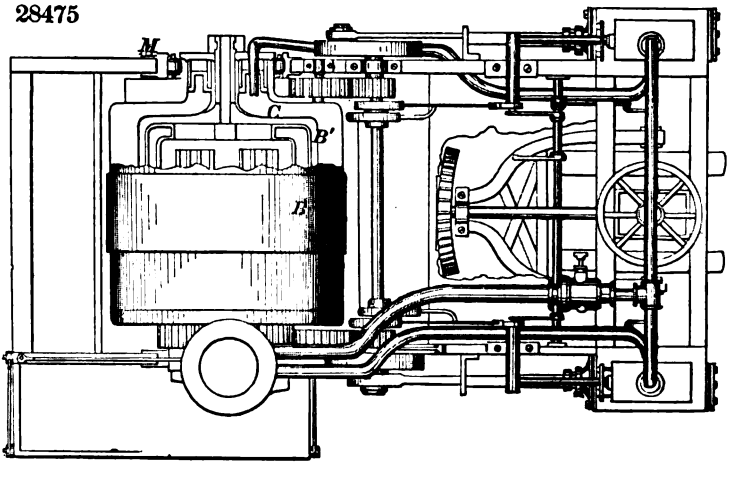

28478

Fig. 1

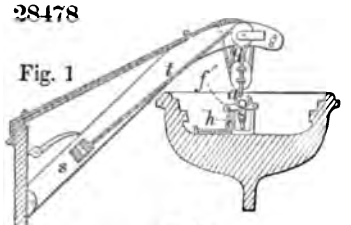

Fig. 2

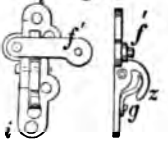

28479

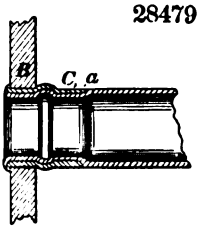

28480

28481

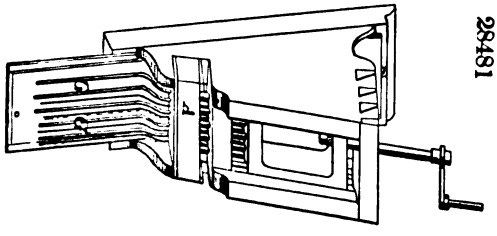

28482

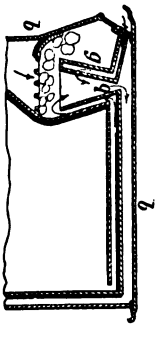

28485

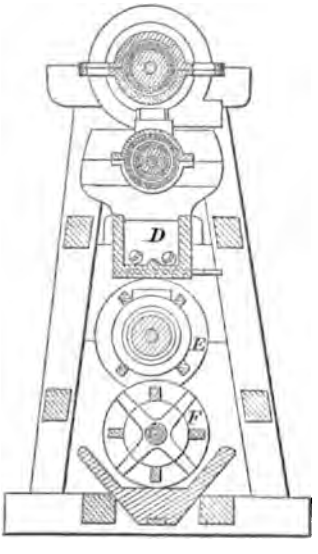

28483

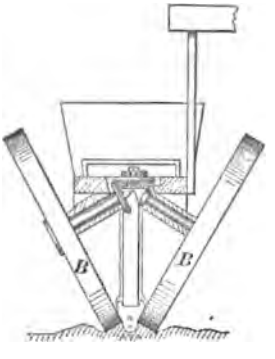

28484

28486

Fig. 1

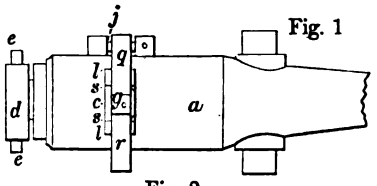

Fig. 2

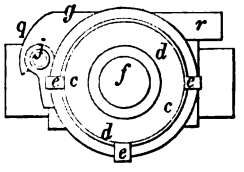

28487

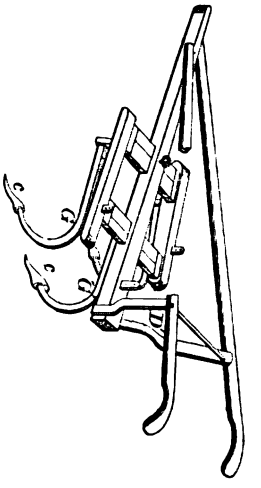

28489

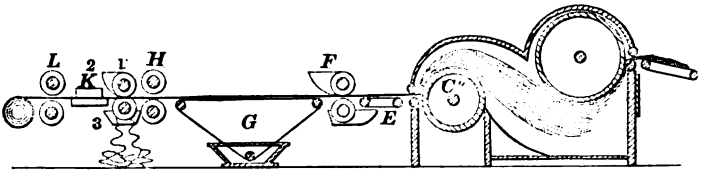

28490

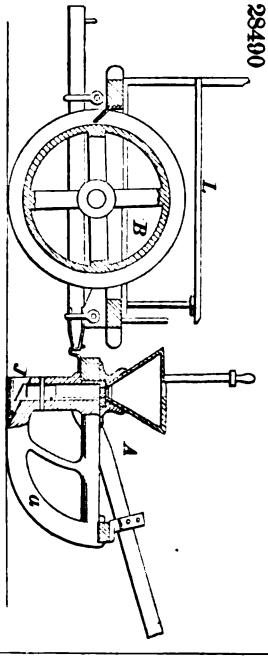

28488

Fig. 1

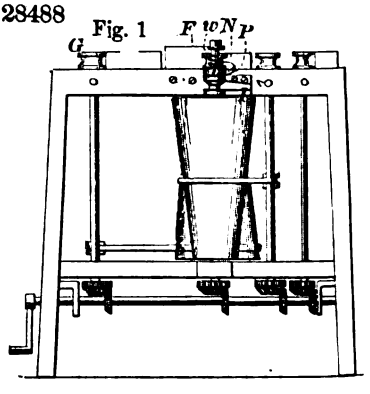

Fig. 2

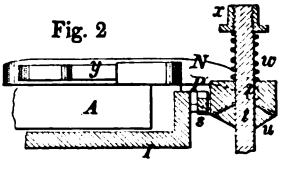

28491

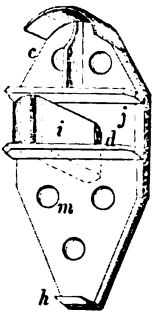

28492

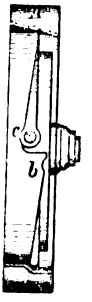

28493

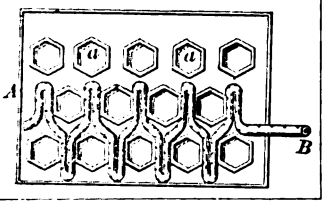

28495

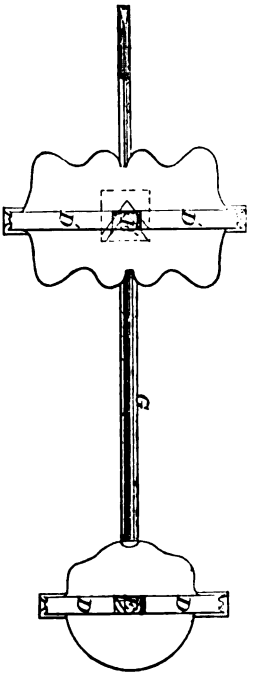

28496

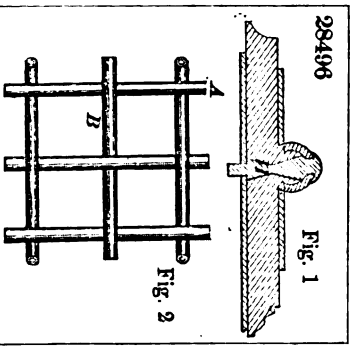

28494

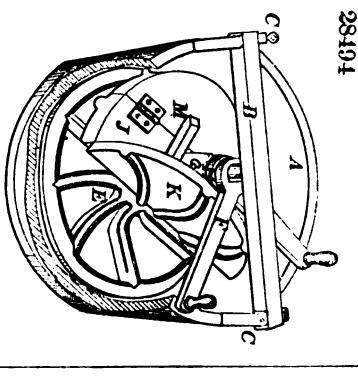

28497

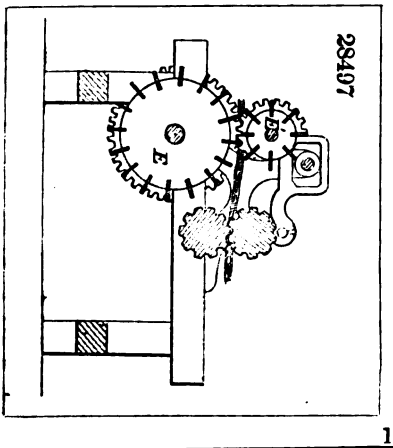

28498

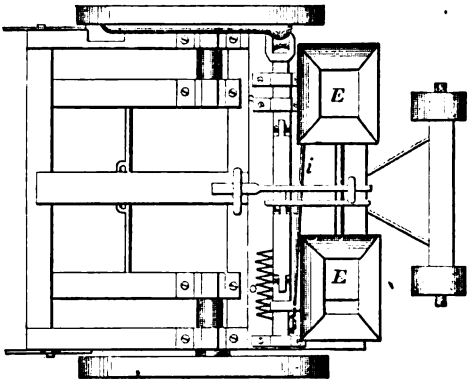

28500

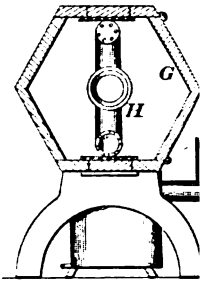

28501

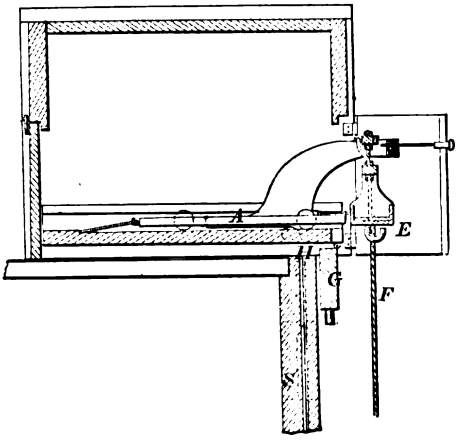

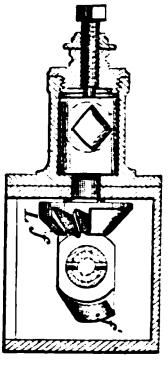

28499

Fig. 1

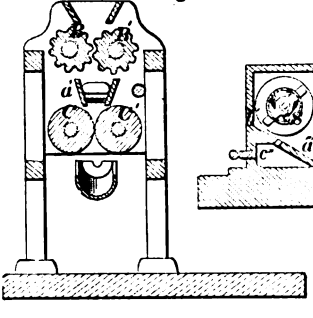

Fig. 2

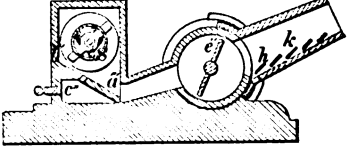

503

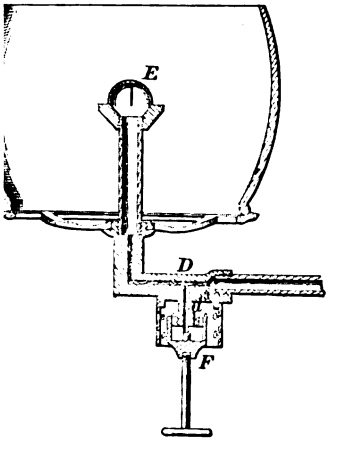

28504

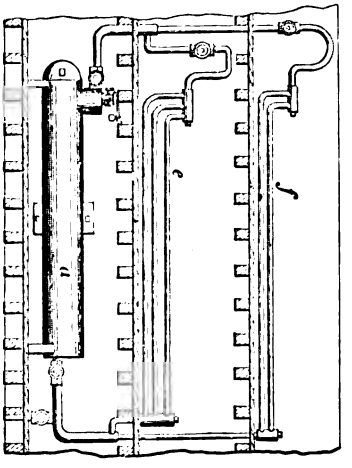

28505

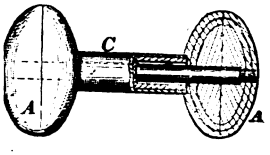

506

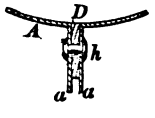

28507

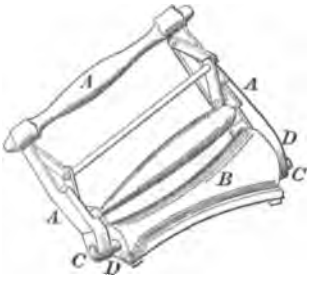

8508

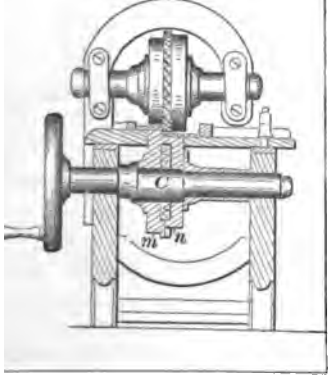

28510

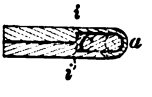

28511

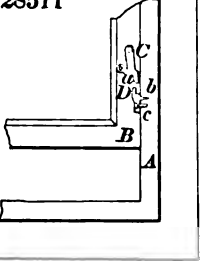

28509

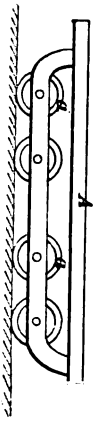

28512

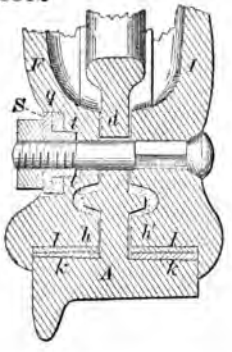

28514

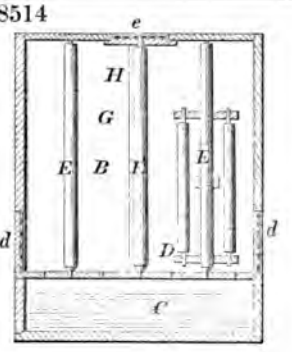

28517 Fig. 1

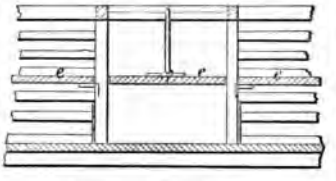

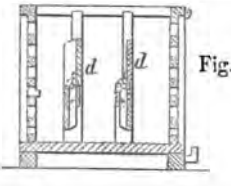

Fig. 2

28518

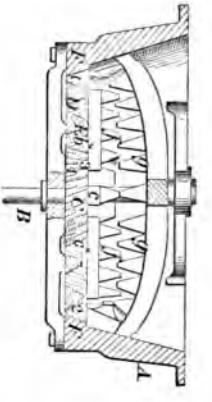

28519

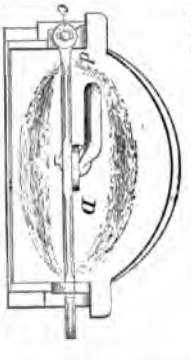

28520

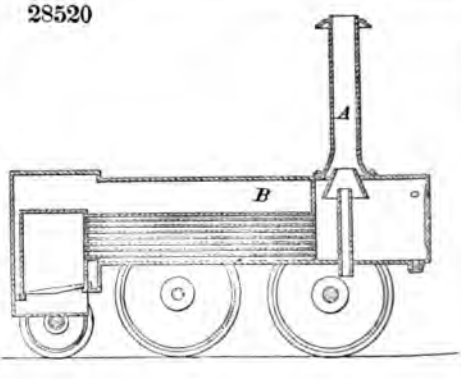

28521

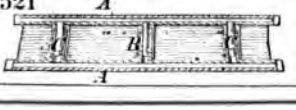

28522

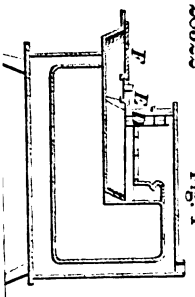

Fig. 1

Fig. 2

28523

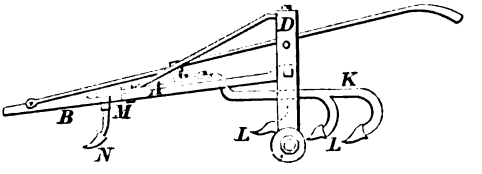

28524

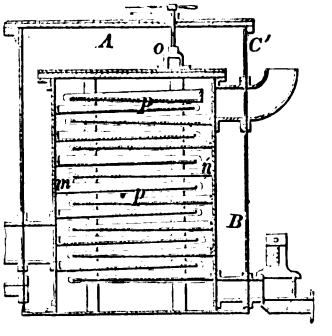

28525

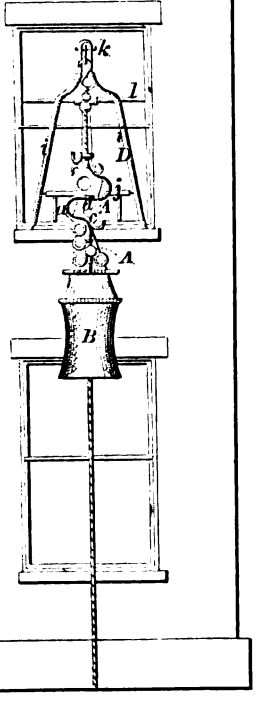

28526

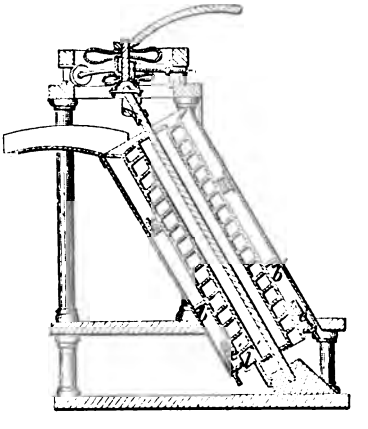

28527

Fig. 1

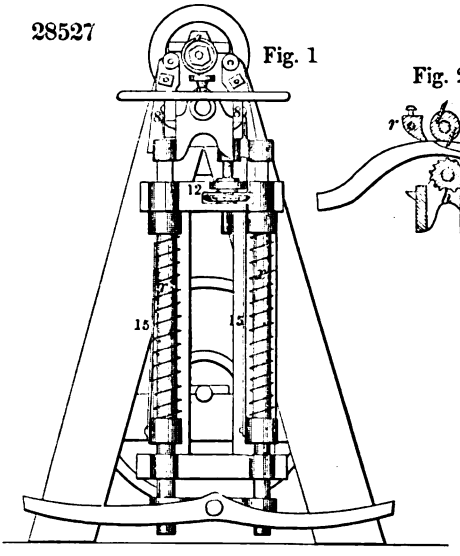

Fig. 2

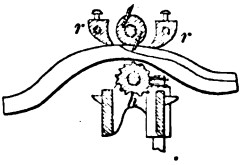

28528

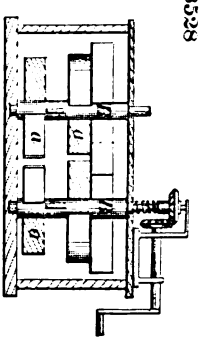

28529

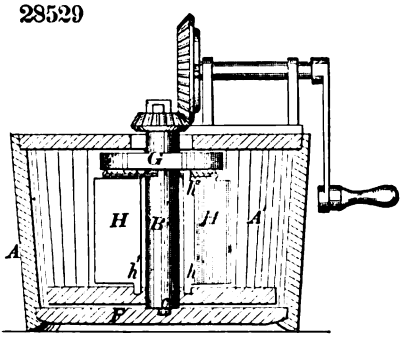

28530

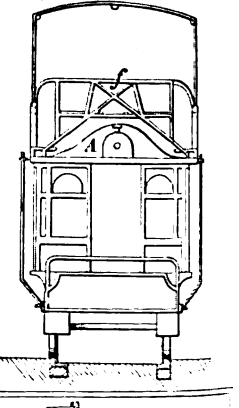

28532

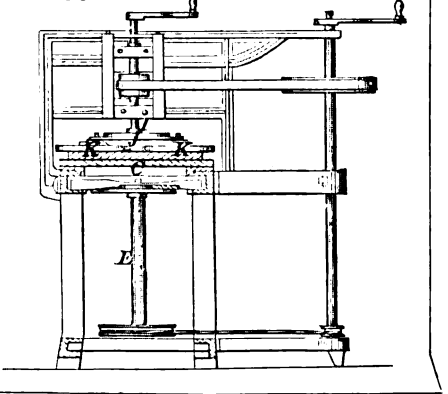

28531

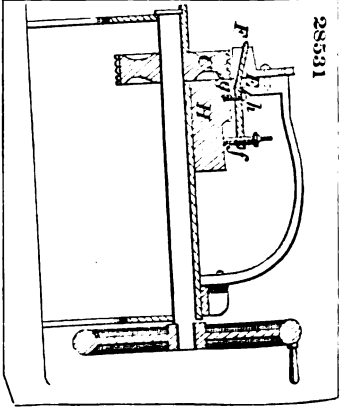

28533

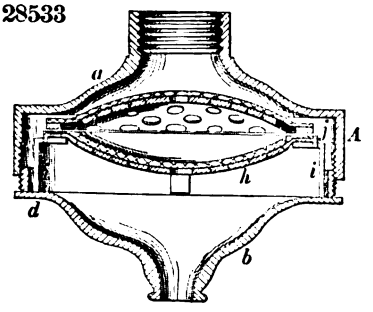

28534

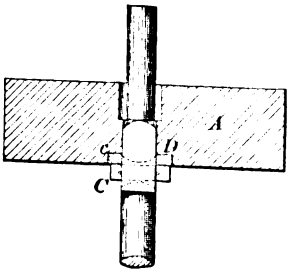

28537

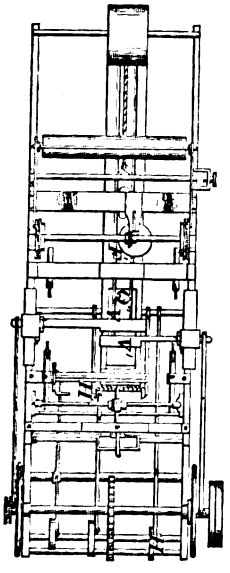

28535

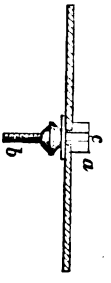

28536

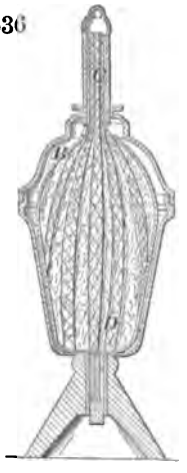

28538

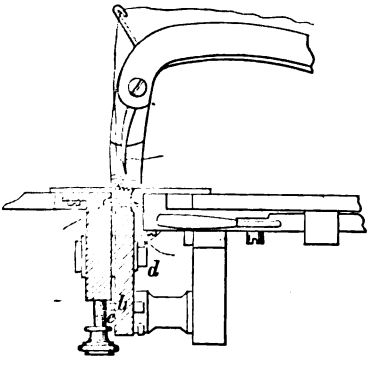

28539

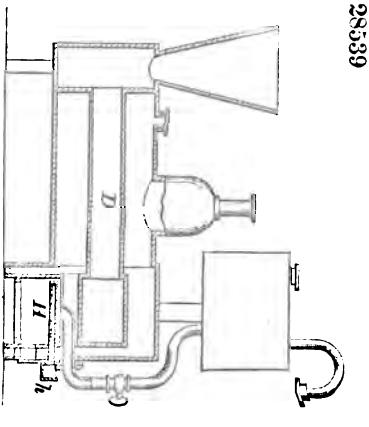

28540

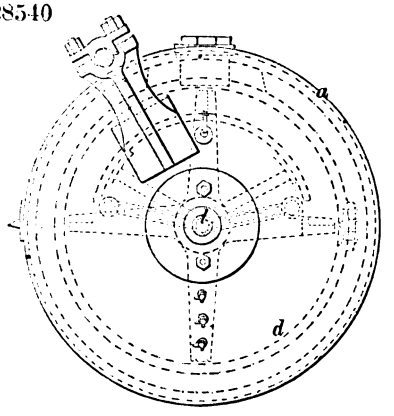

28542

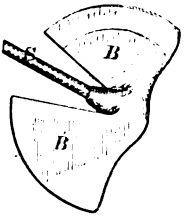

28547

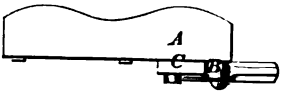

28544

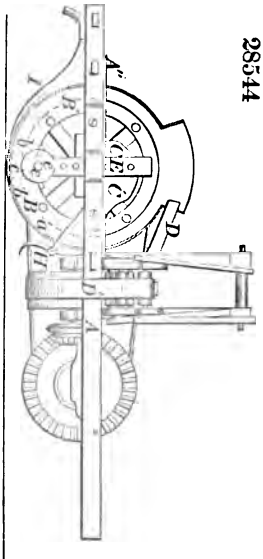

28545

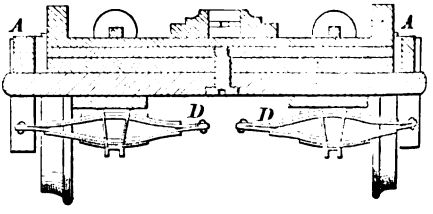

28518

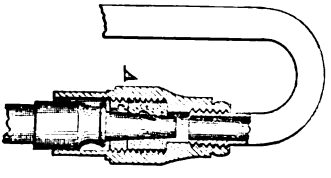

28546

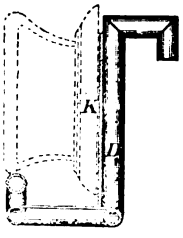

28549

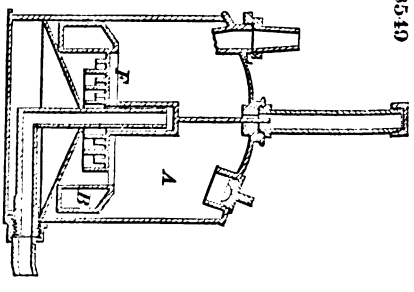

28550

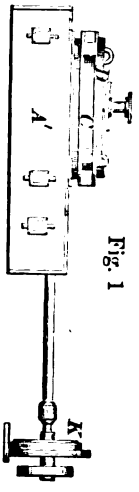

Fig. 1

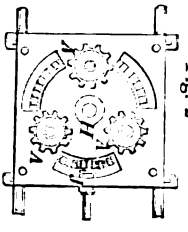

Fig. 2

28551

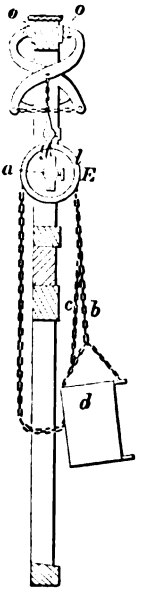

28552

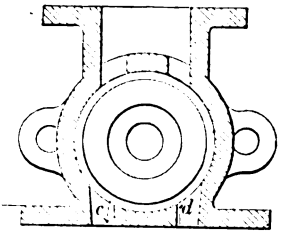

28553

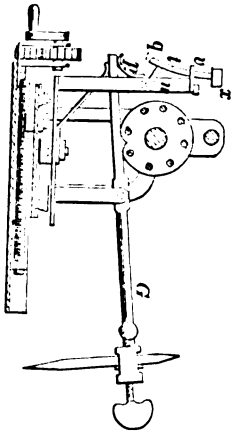

28554

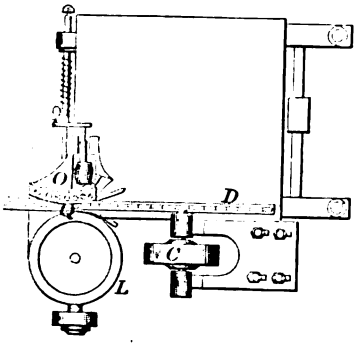

28555

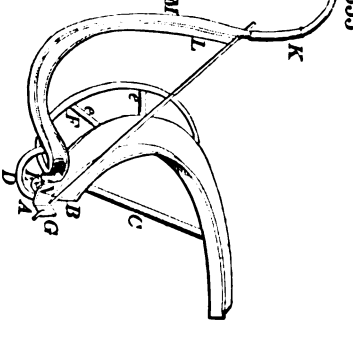

28556

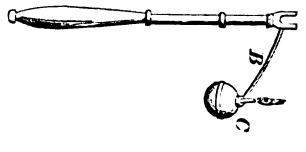

28557

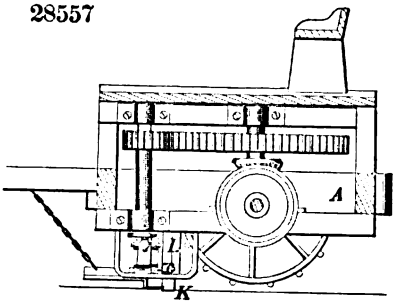

28558

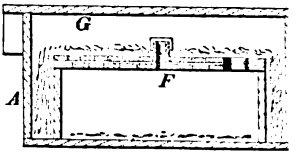

28560

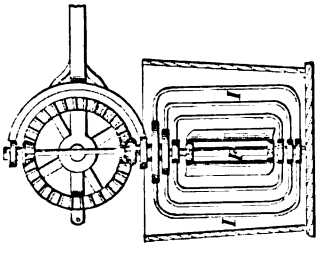

28559

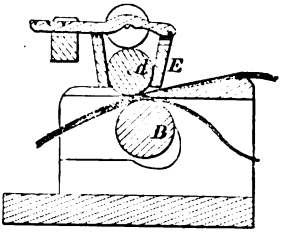

28562

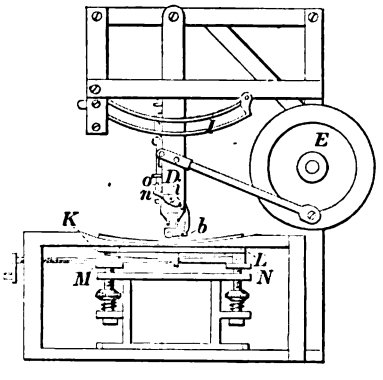

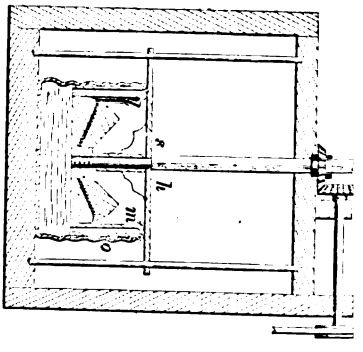

28564

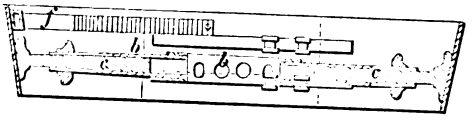

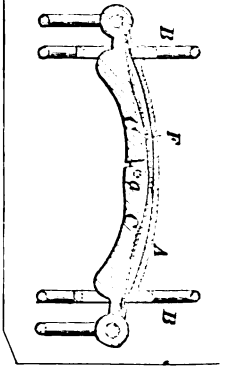

28565

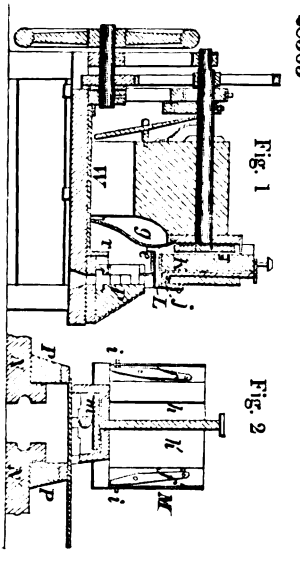

Fig. 1

Fig. 2

28566

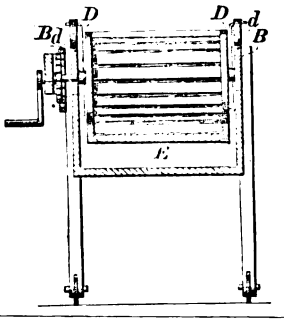

28568

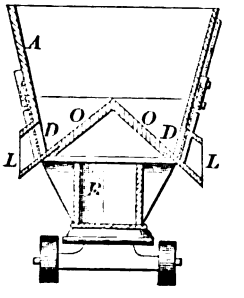

28567

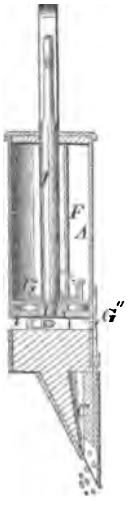

28569

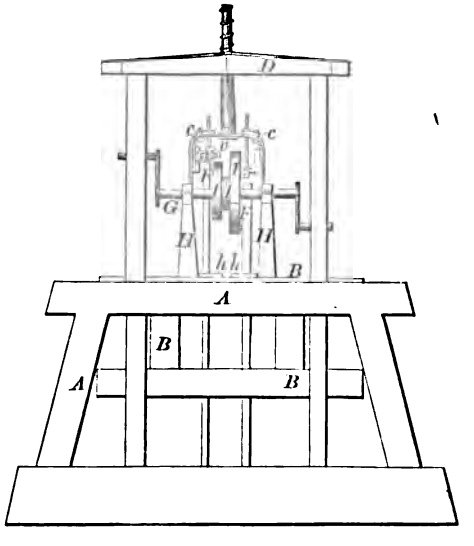

28570

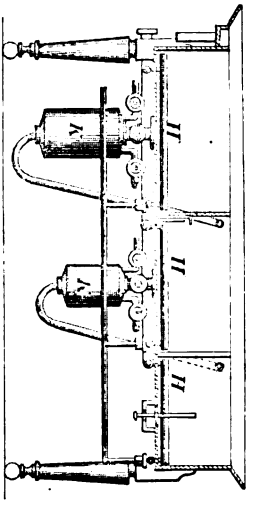

28571

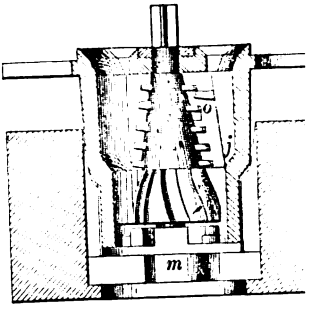

28573

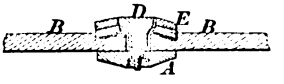

28572

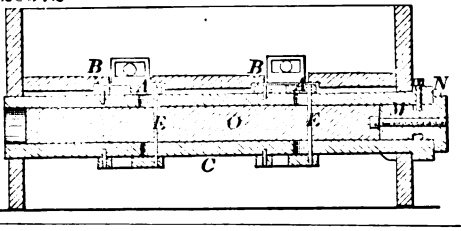

28574

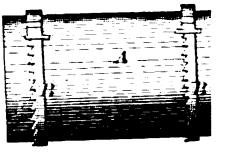

28578

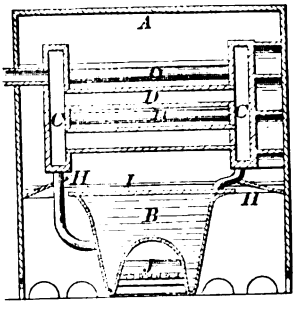

28575

28576

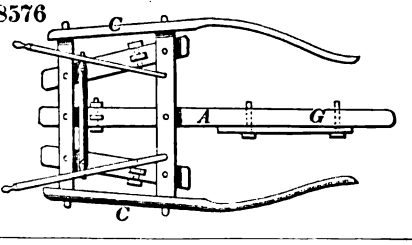

28580

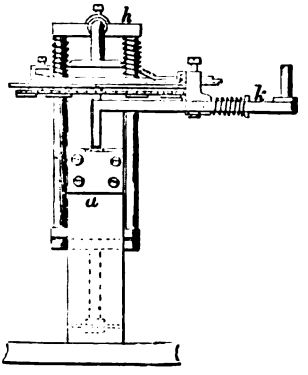

28581

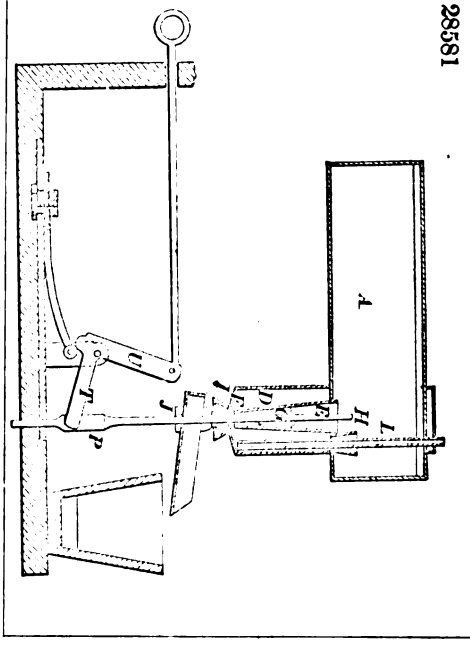

28583

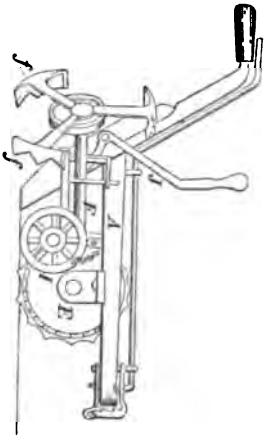

28582

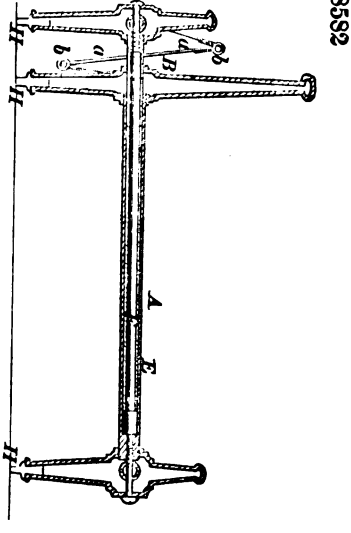

28584

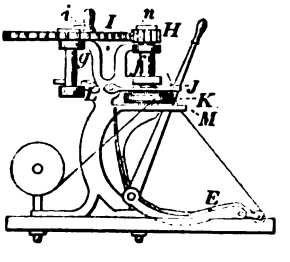

28585

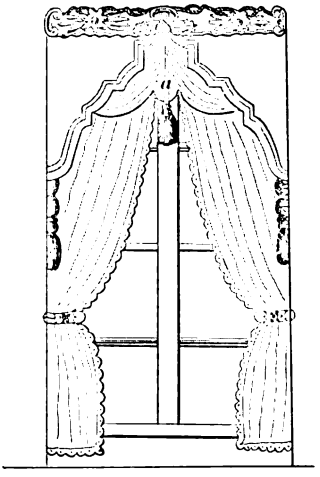

28586

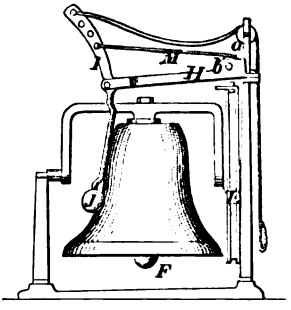

28587

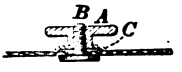

28589

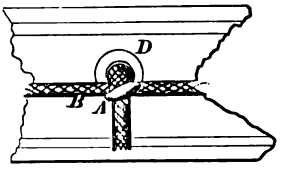

28588

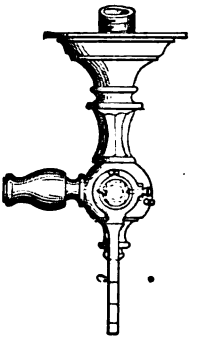

28590

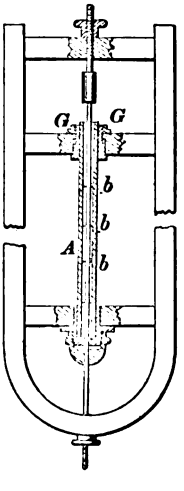

28591

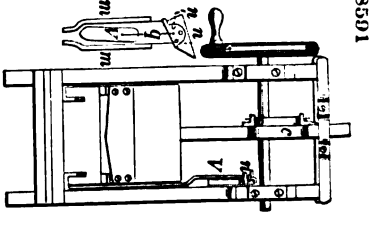

28592

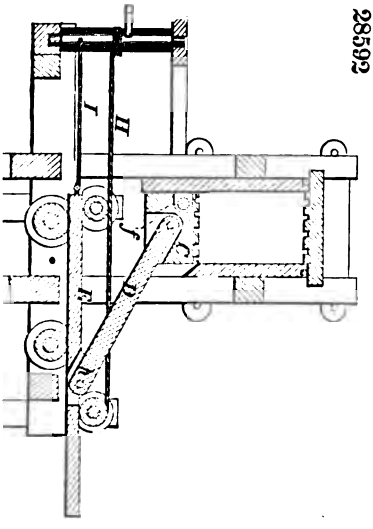

28594

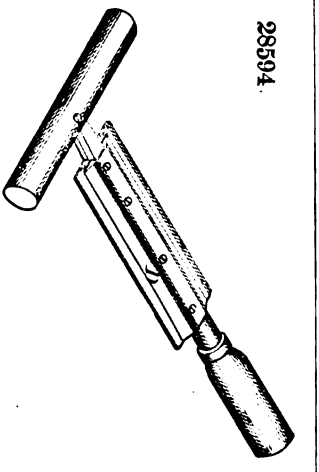

28593

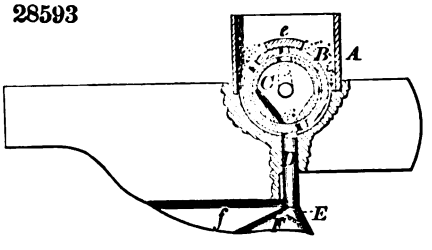

28595

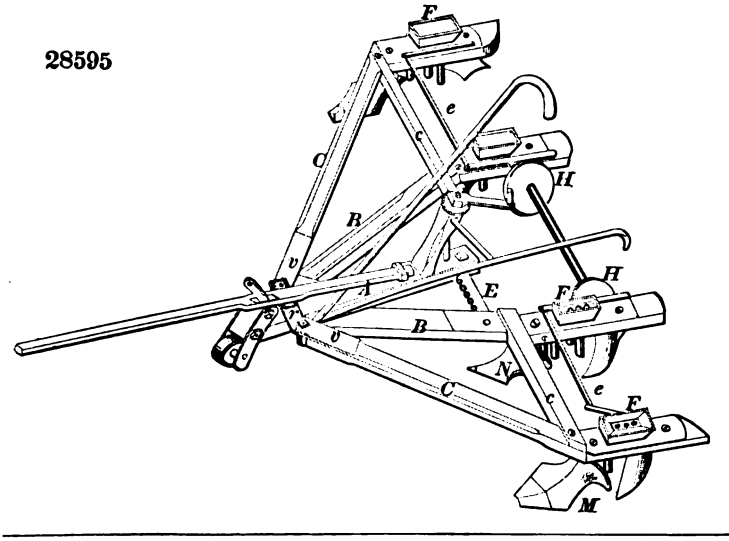

28596

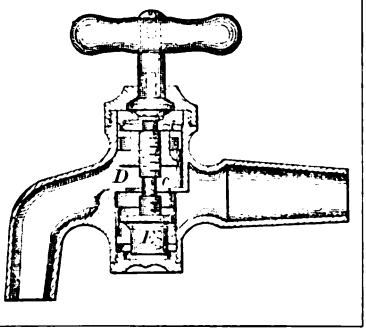

28597

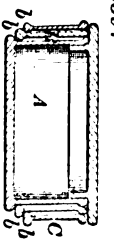

28598

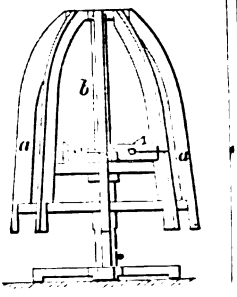

28603

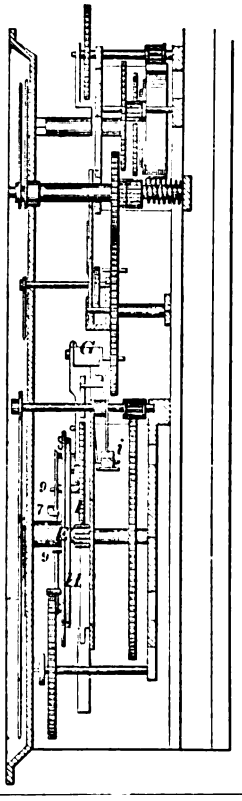

28600

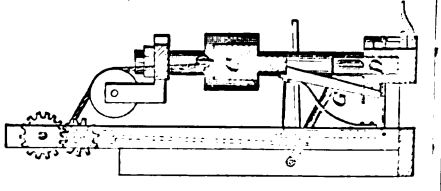

28602

Fig. 1

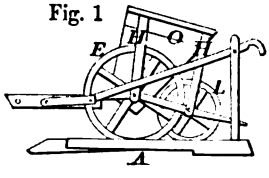

Fig. 3

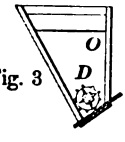

Fig. 2

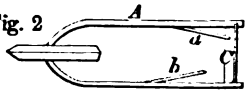

28601

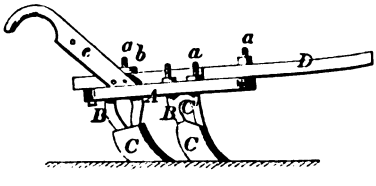

28599

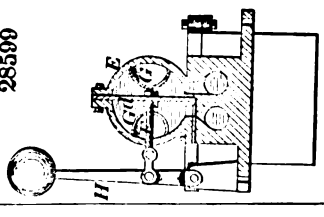

28604

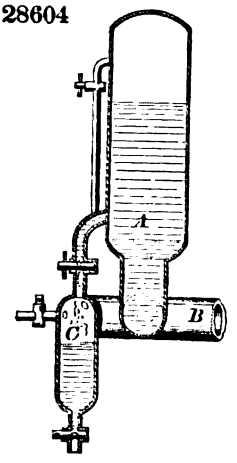

28605

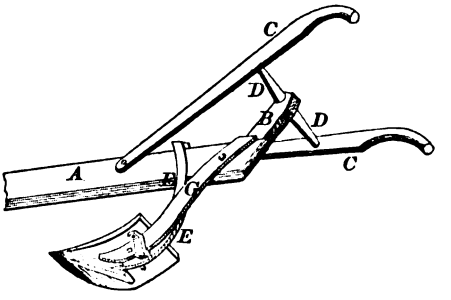

28606

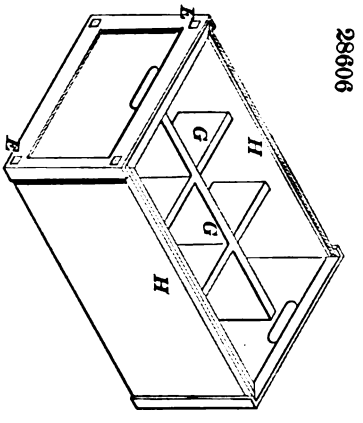

28607

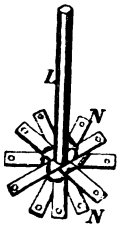

28608

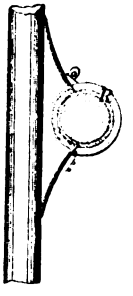

28609

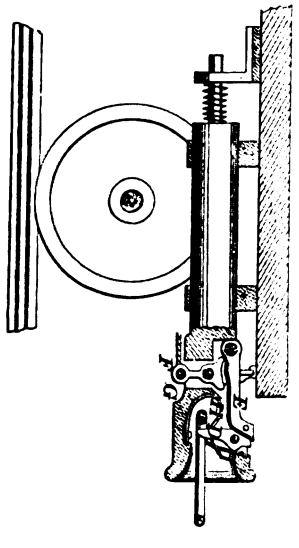

28610

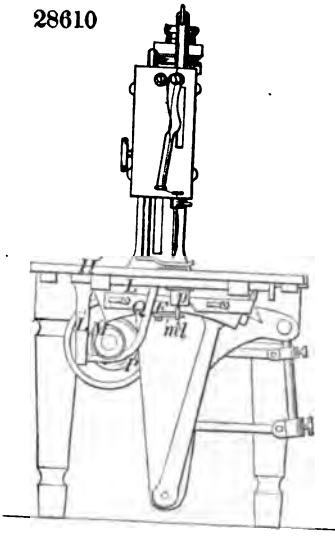

28611

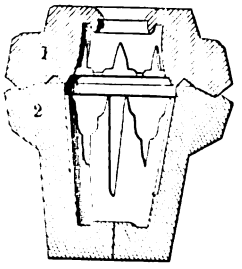

28612

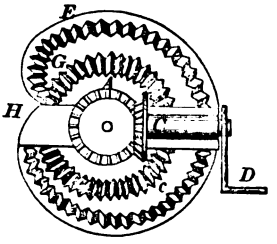

28613

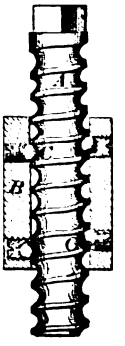

28618

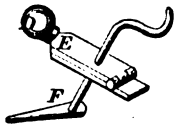

28614

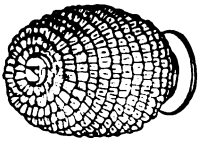

28615

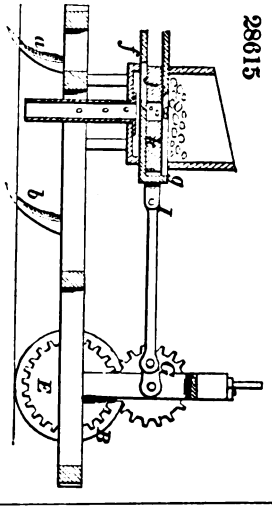

28616

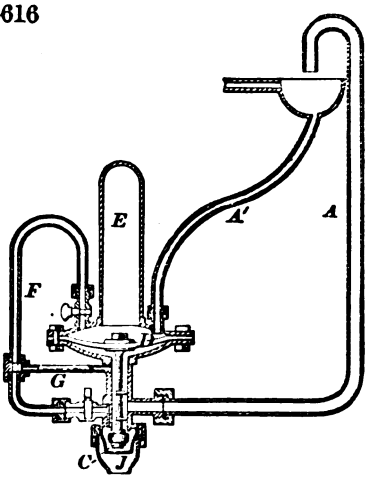

28619

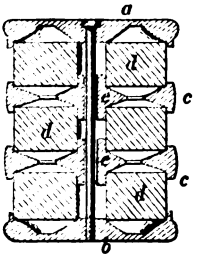

28620

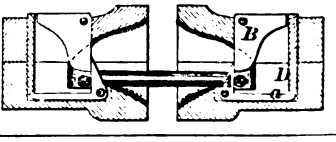

28621

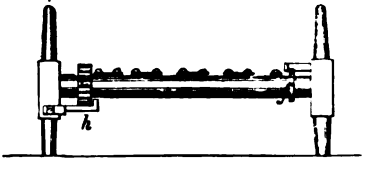

322

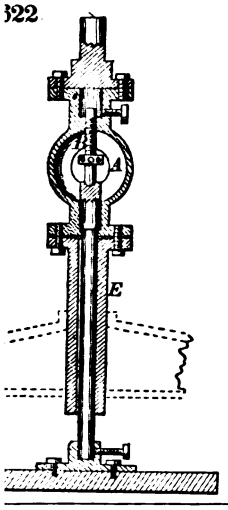

28624

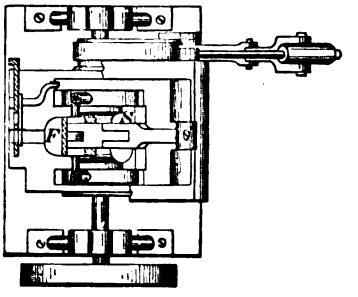

28623

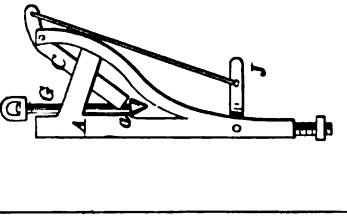

28625

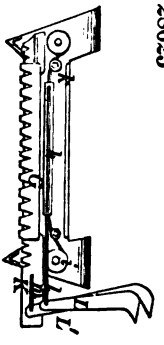

28626

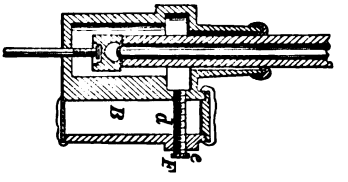

28627

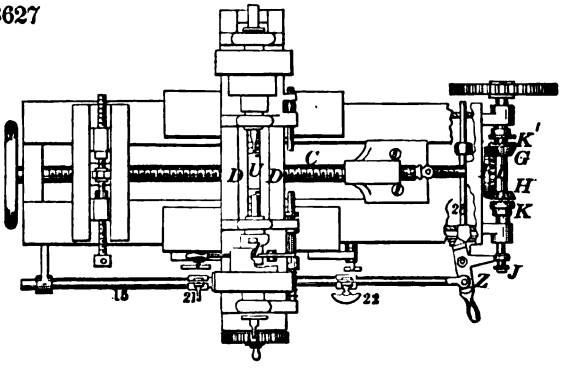

28628

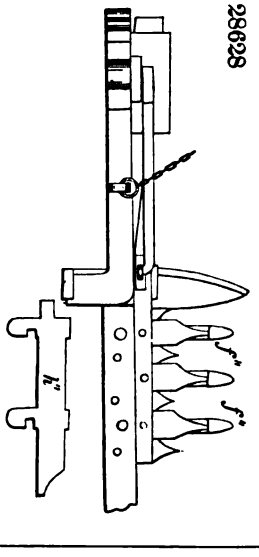

28629

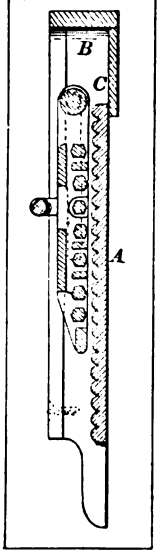

28630

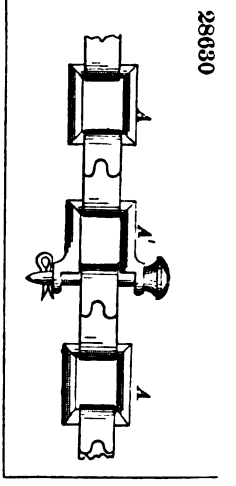

28631

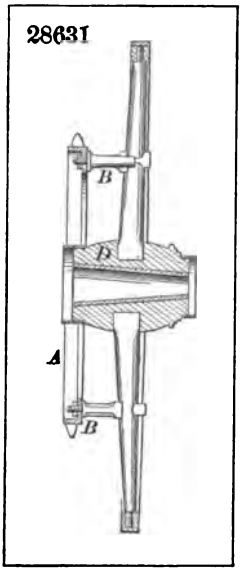

28632

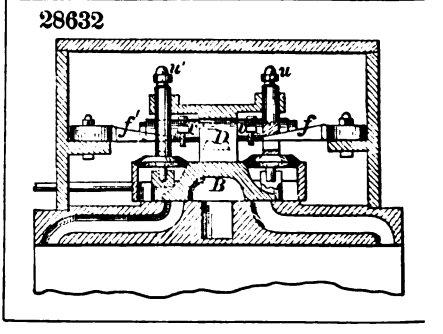

28634

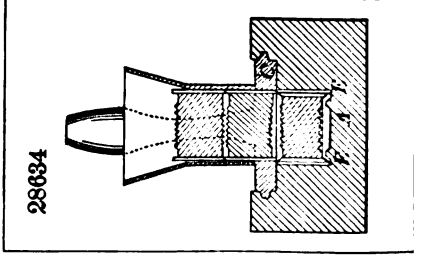

28633

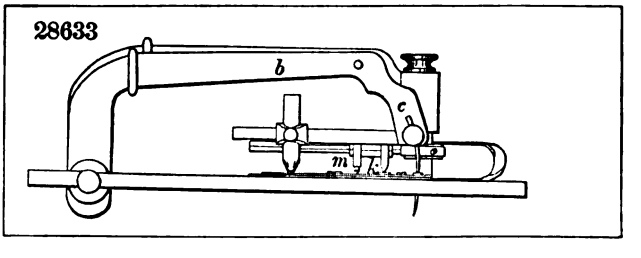

28636

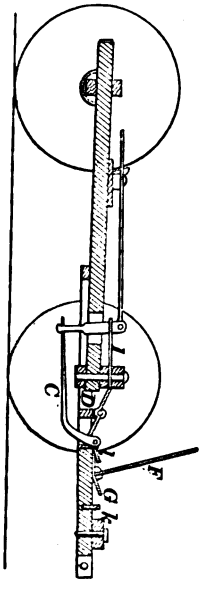

28640

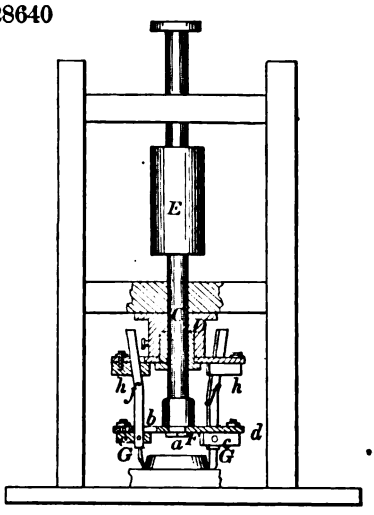

28638

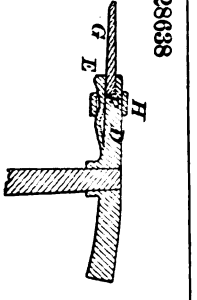

28637

28639

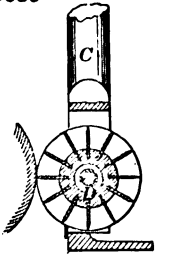

28642

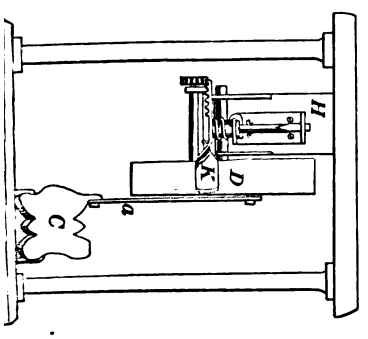

28641

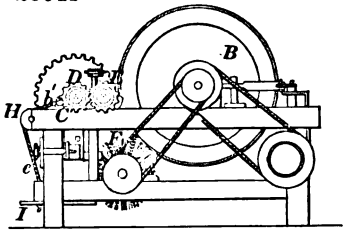

28643

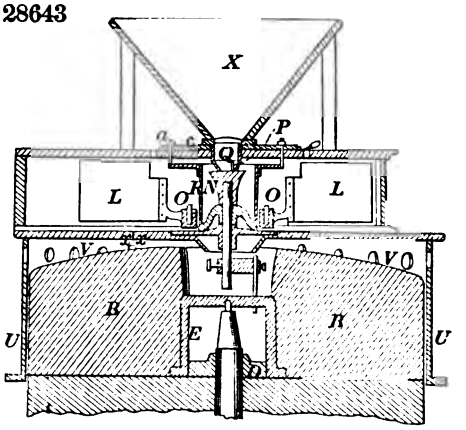

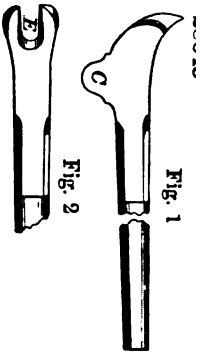

28644

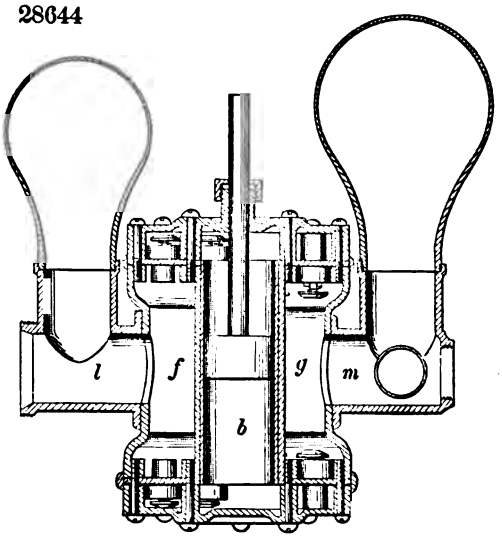

28646

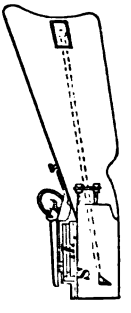

28647

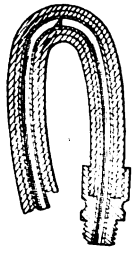

28648

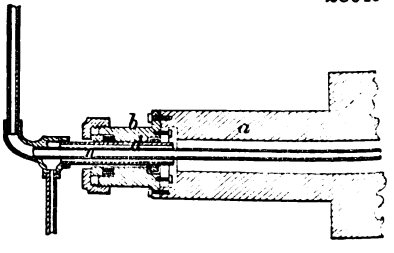

28649

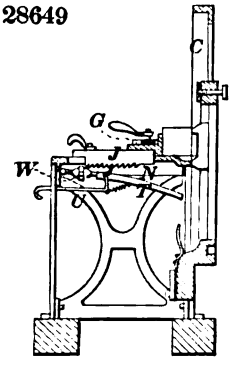

28650

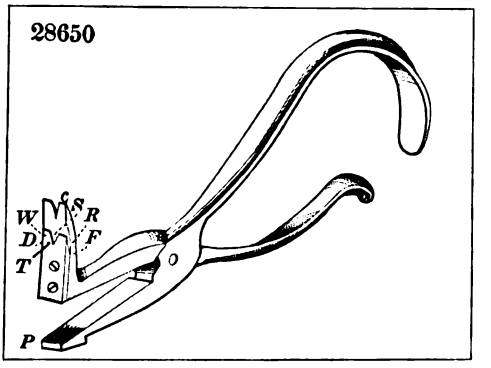

28652

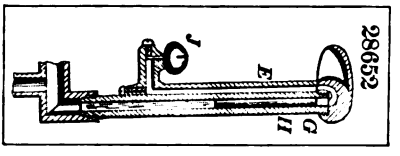

28653

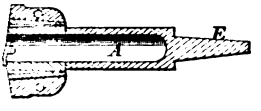

28654

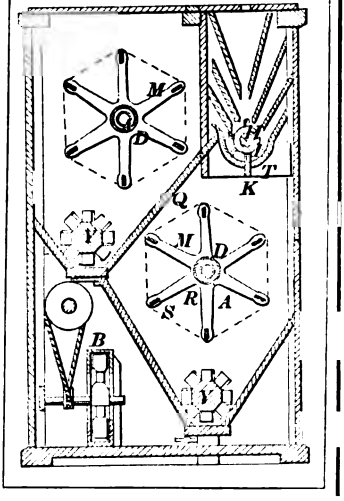

28655

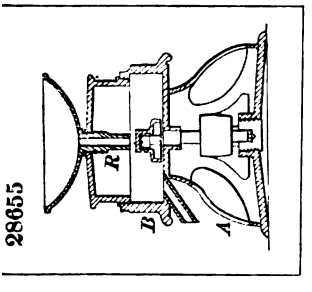

28656

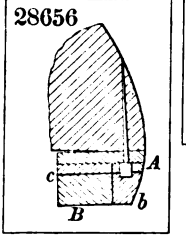

28657

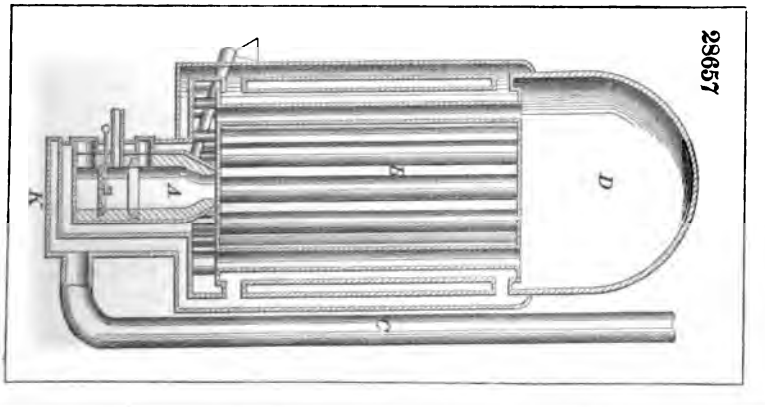

28658

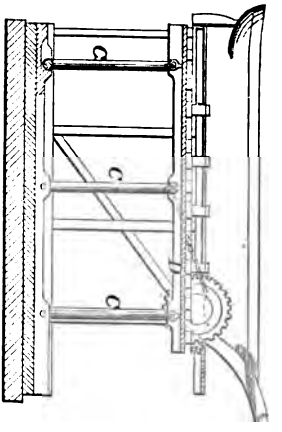

28659

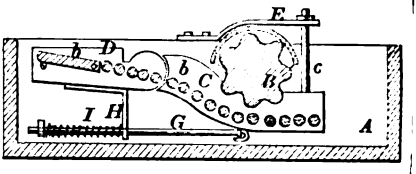

28660

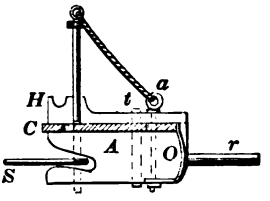

28661

28662

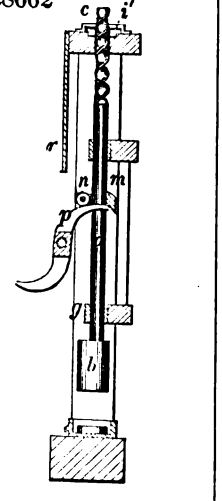

28663

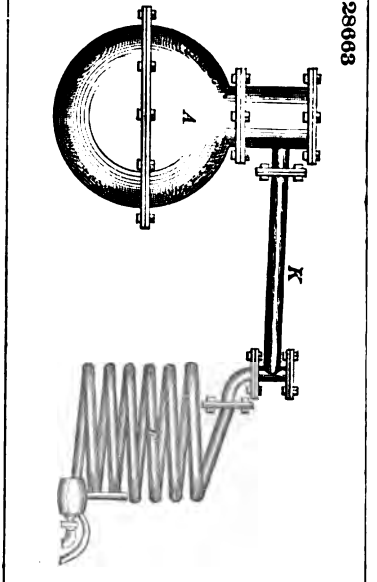

28664

Fig. 1

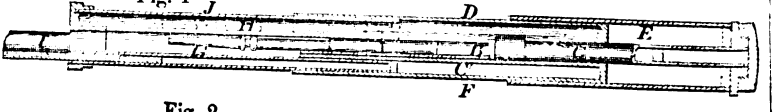

Fig. 2

28665

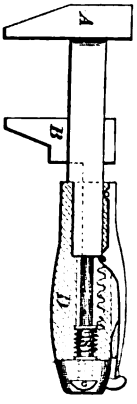

28666

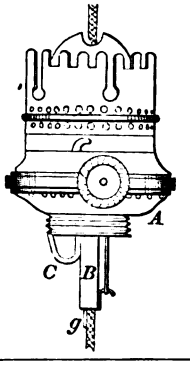

28667

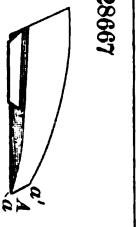

3669

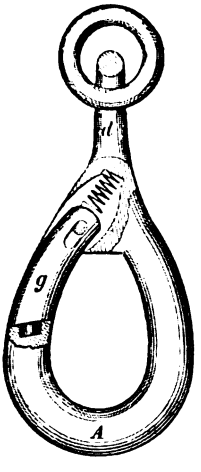

28668

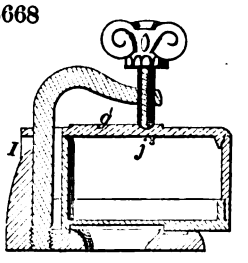

28671

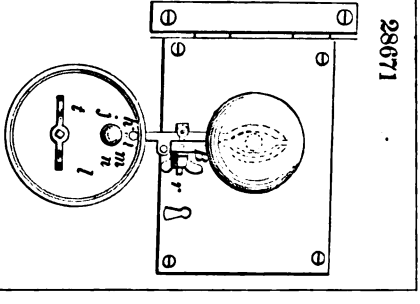

28670

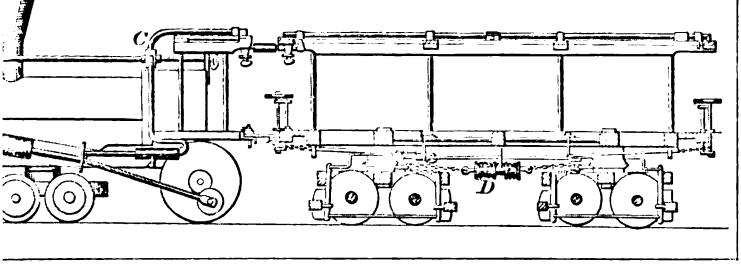

28672

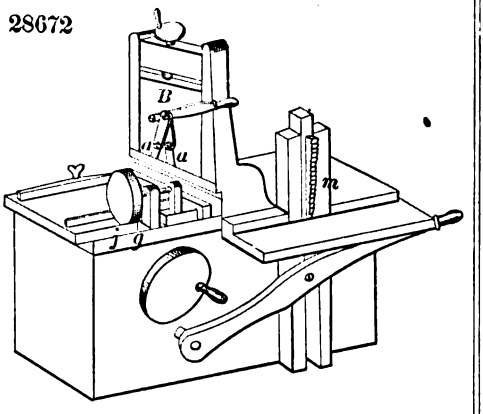

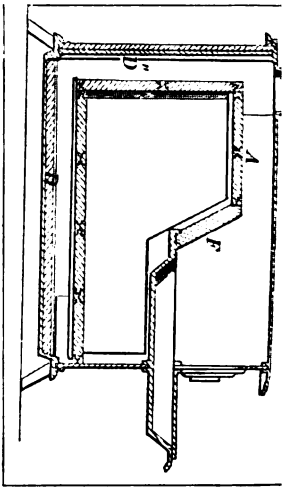

28675

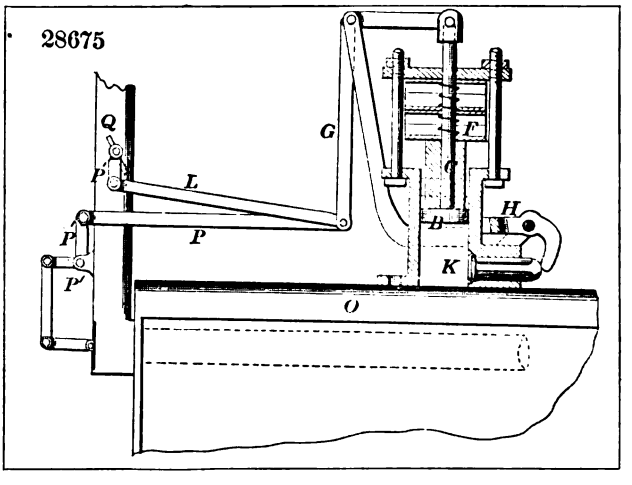

28676

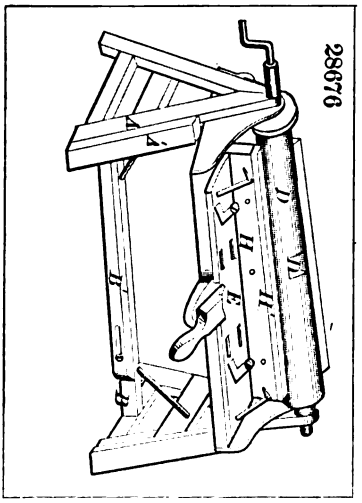

28674

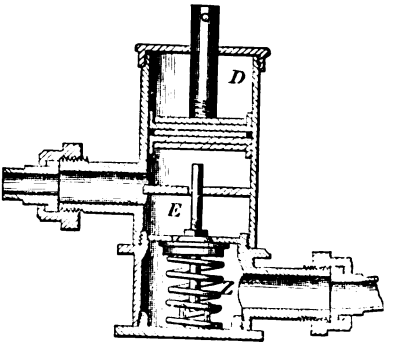

28677

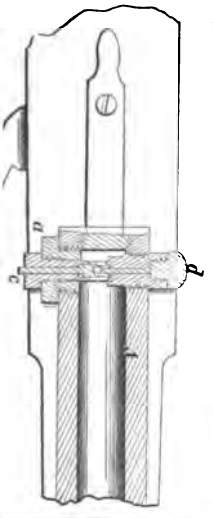

28679

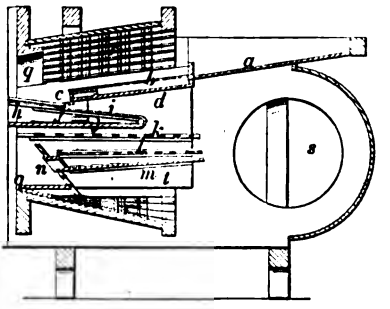

28680

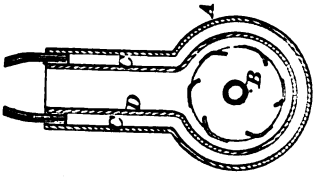

28681

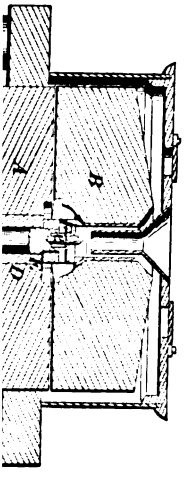

28682

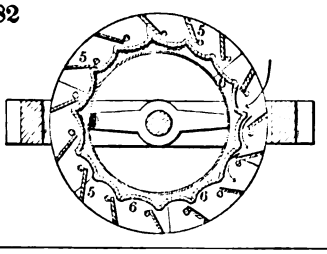

28683

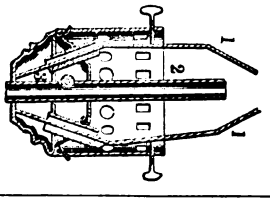

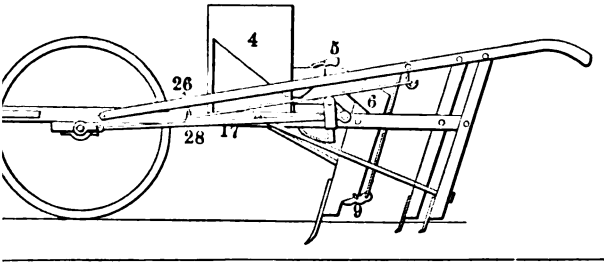

28685

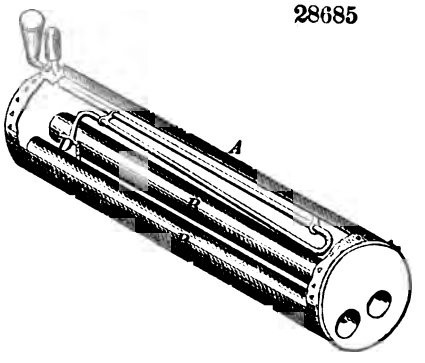

28686

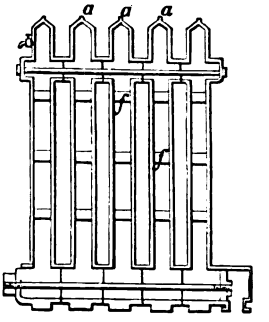

28687

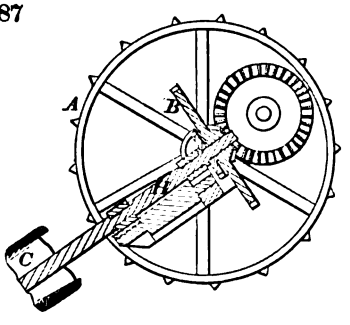

28688

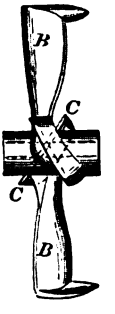

28689

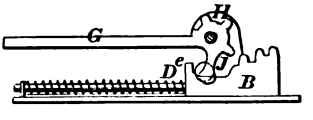

28690

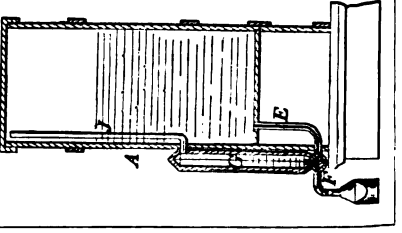

28692

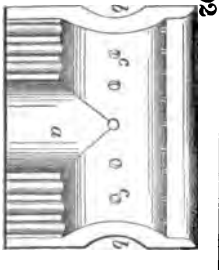

28691

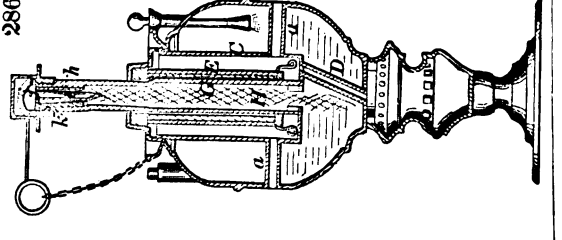

28693

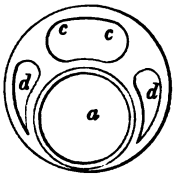

28694

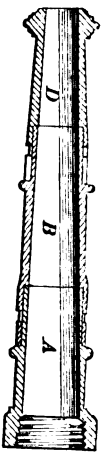

28695

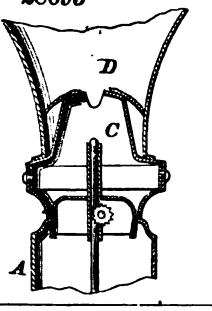

28696

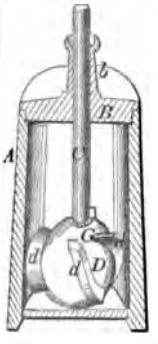

28697

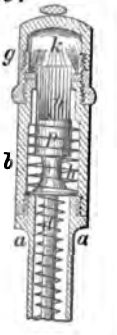

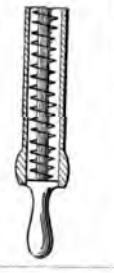

28698

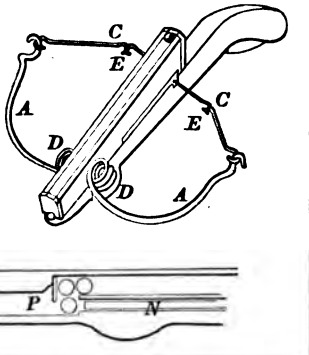

28700

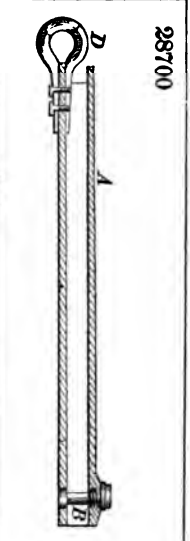

28699

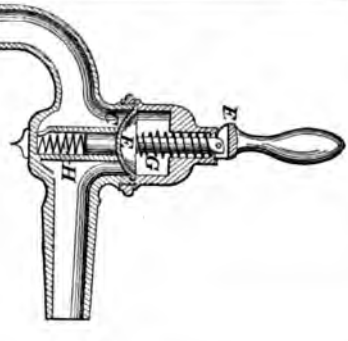

28701

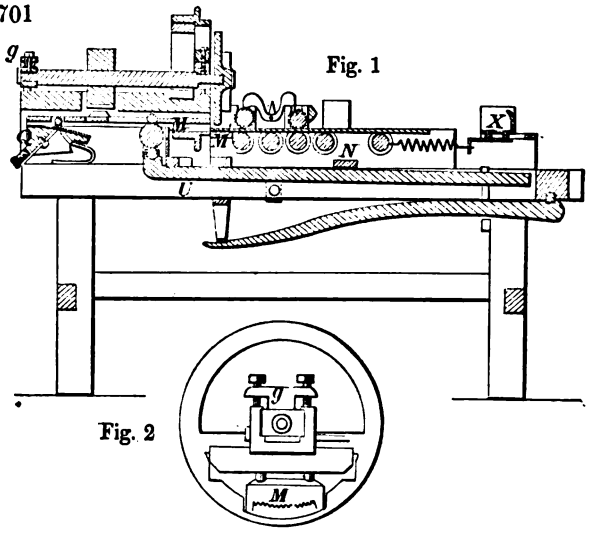

Fig. 1

Fig. 2

28704

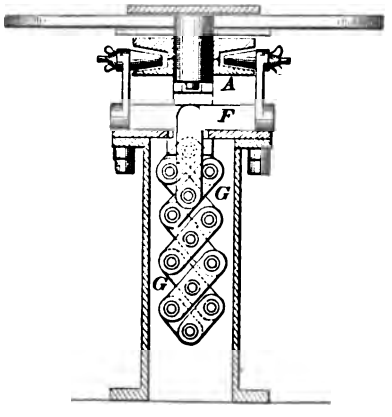

28703

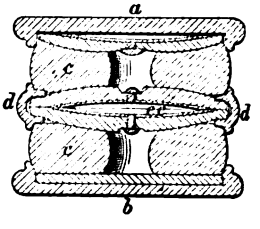

28705

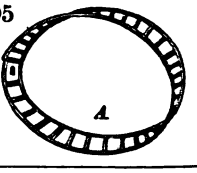

28706

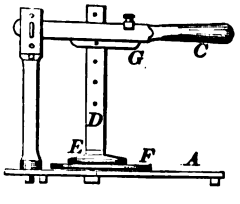

28707

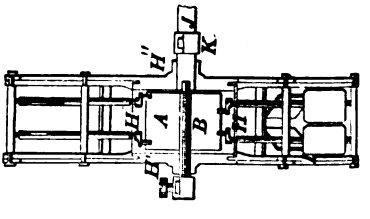

28708

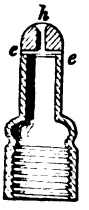

28709

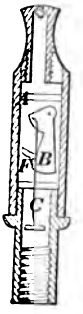

28710

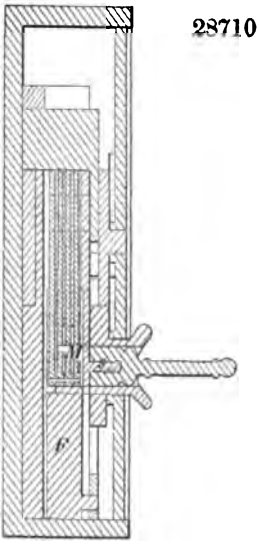

28711

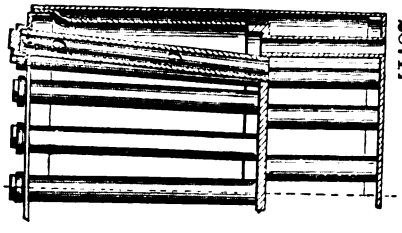

28712

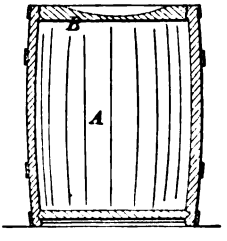

28713

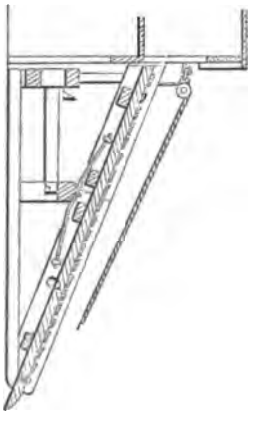

28714

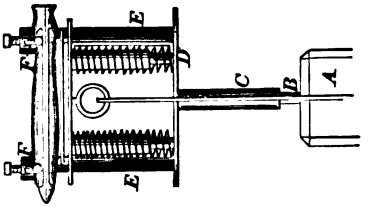

28715

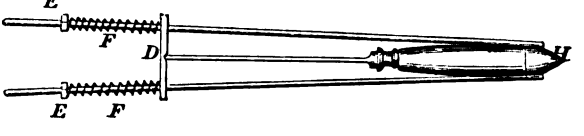

28716

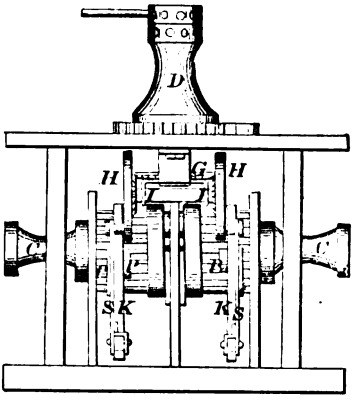

28717

Fig. 1

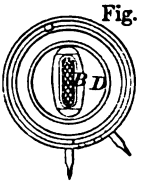

Fig. 2

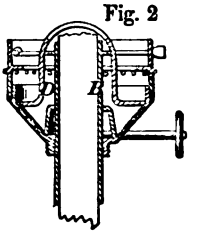

28718

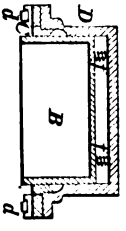

28719

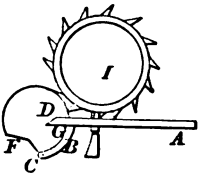

28720

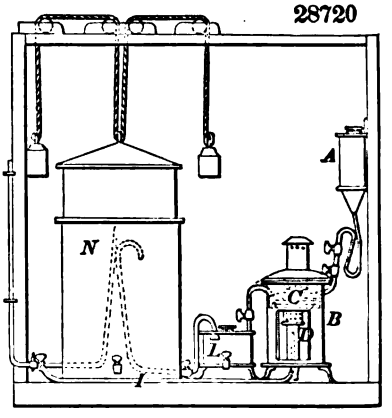

28721

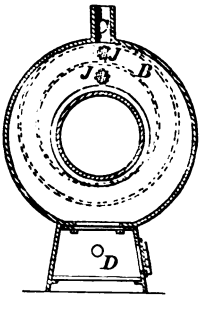

28722

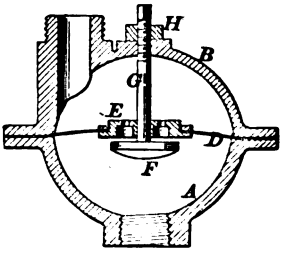

'723

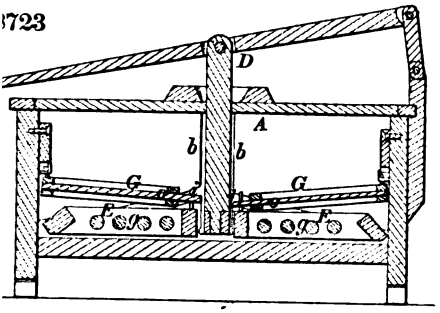

'28724

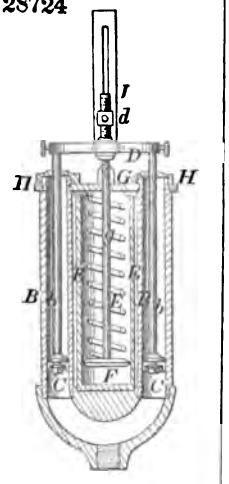

726

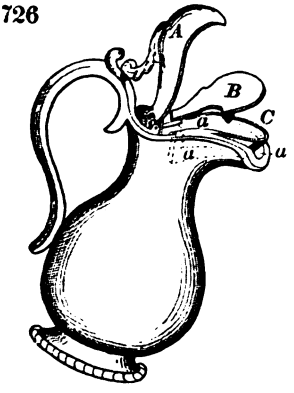

28728

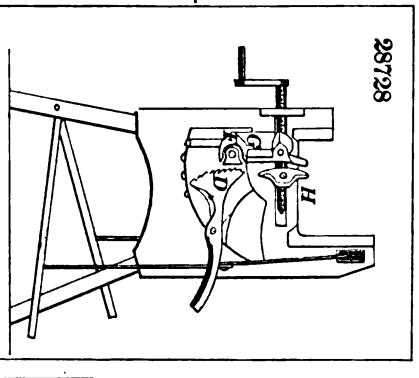

'27

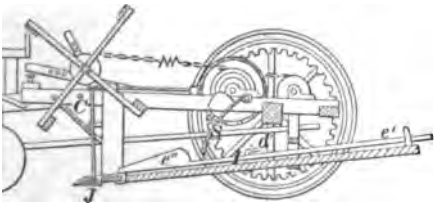

28729

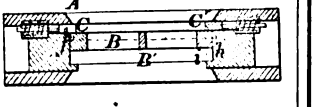

28725

Fig. 1

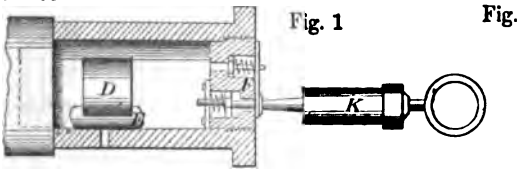

Fig. 2

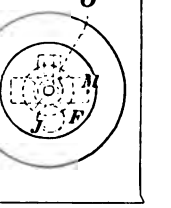

28730

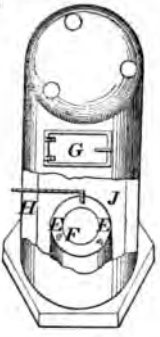

28731

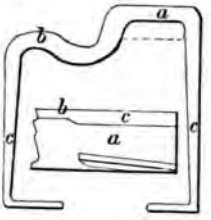

28732

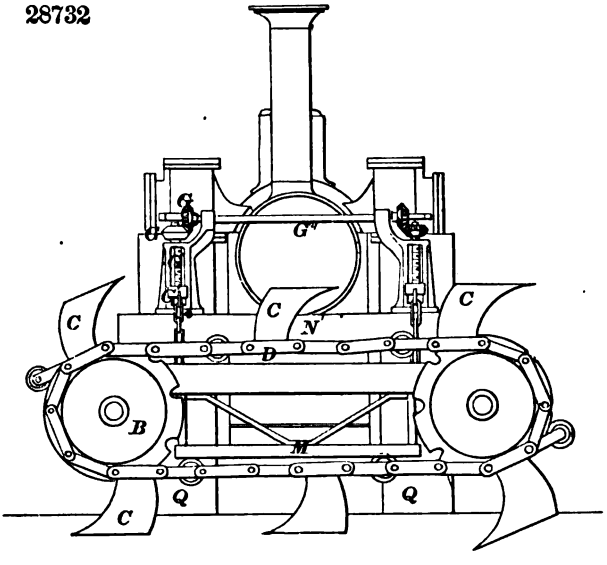

28733

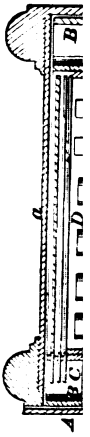

28734

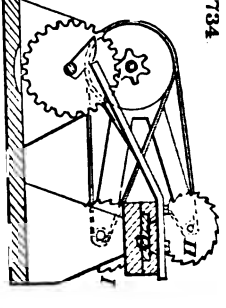

28735

28736

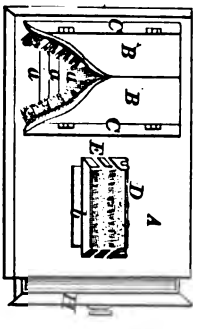

28737

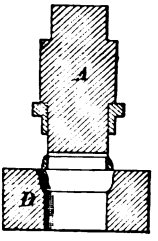

28738

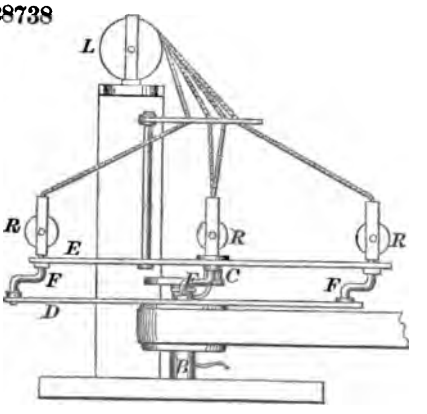

28739

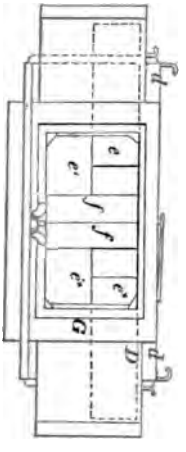

28740

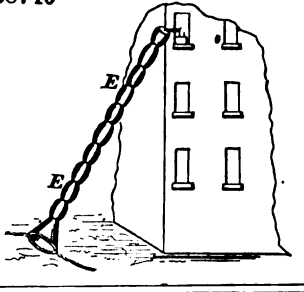

28741

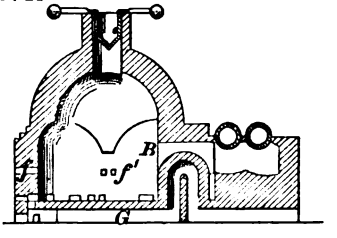

28742

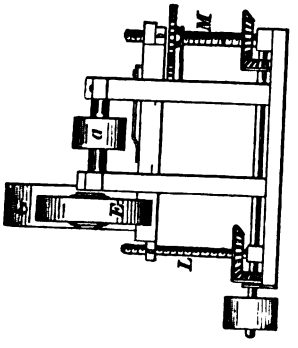

28743

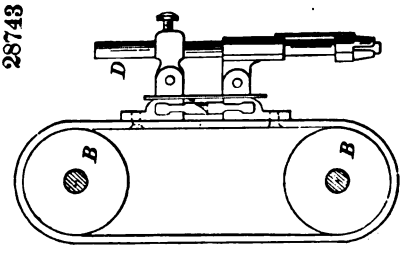

28745

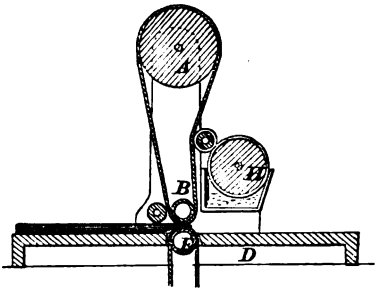

28746

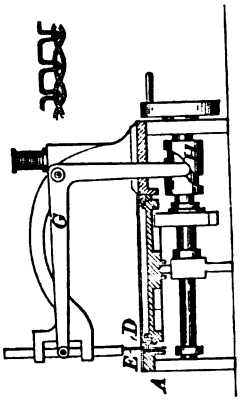

28747

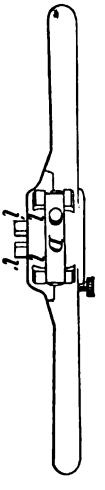

28748

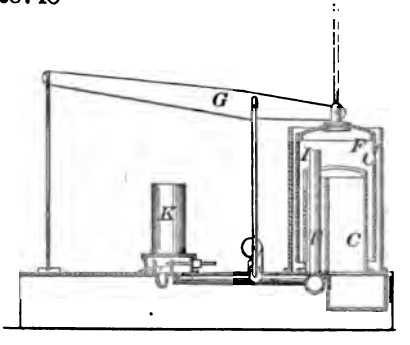

28749

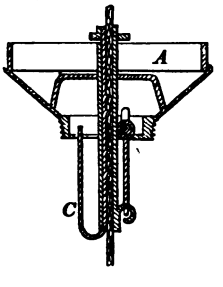

28750

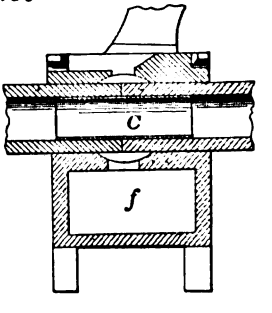

28751.

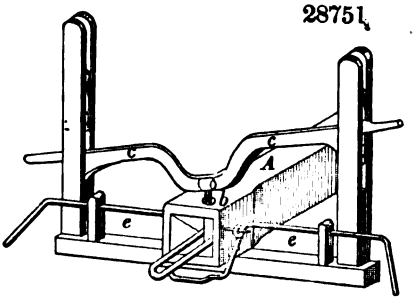

28752

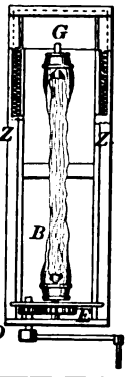

28753

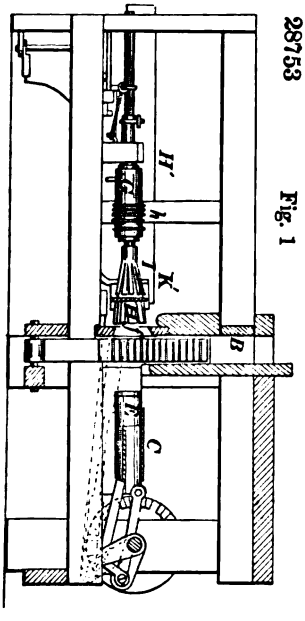

Fig. 1

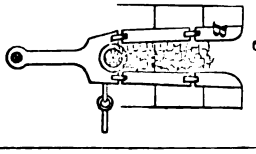

Fig. 2

28754

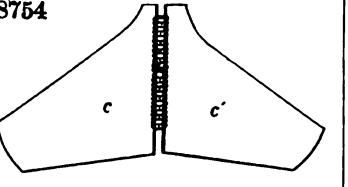

28755

28757

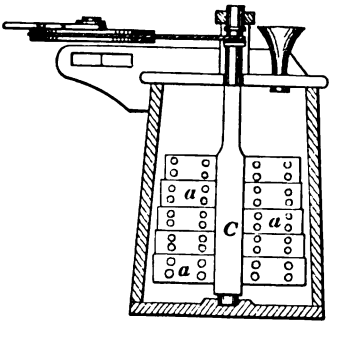

28758

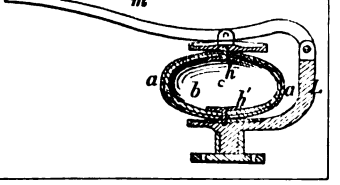

28759

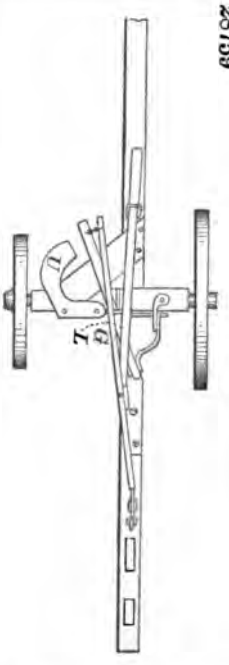

28760

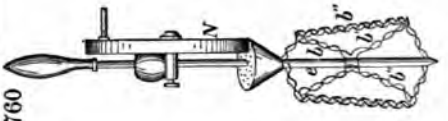

28761

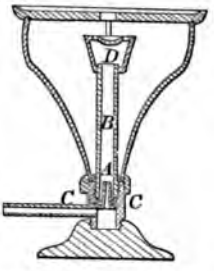

28762

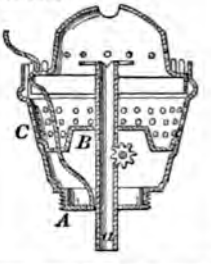

28763

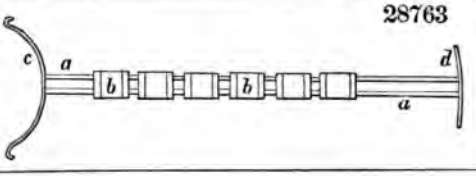

28765

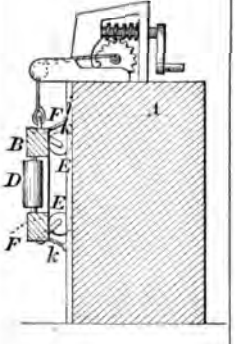

28764

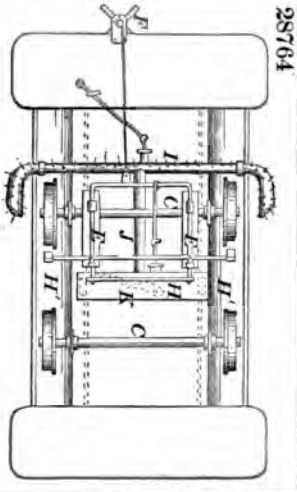

28766

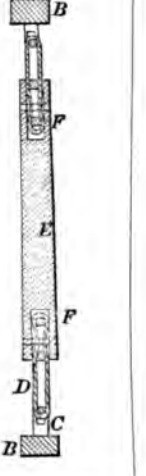

767

771

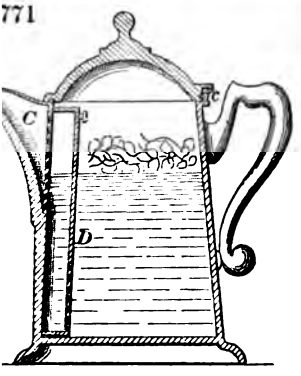

28770

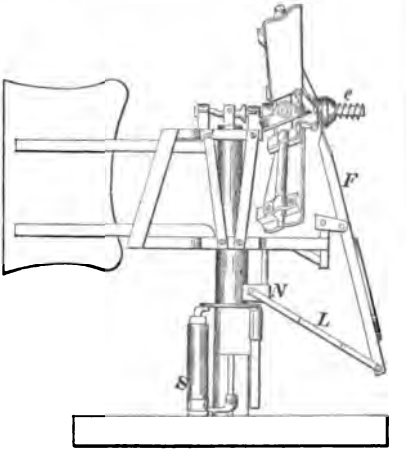

28772

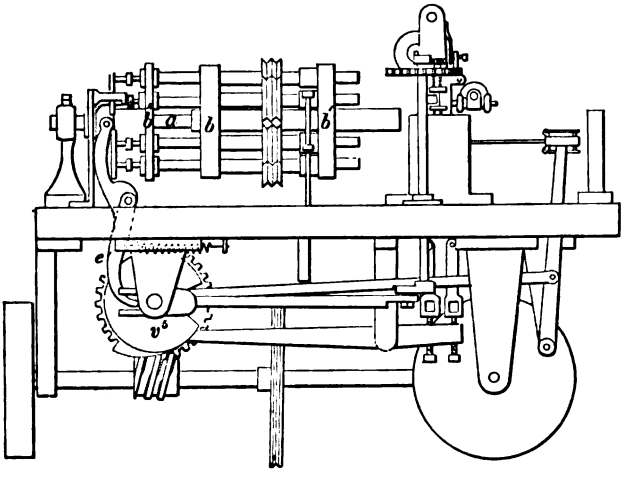

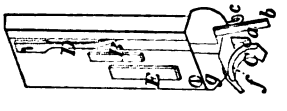

28775

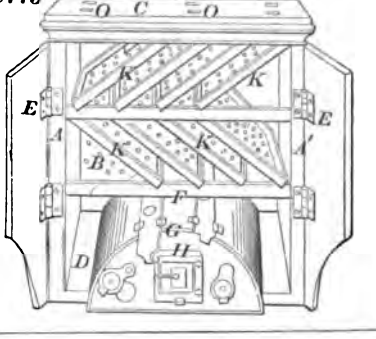

28776

28777

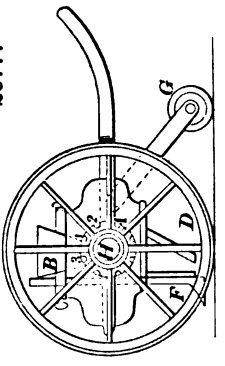

28778

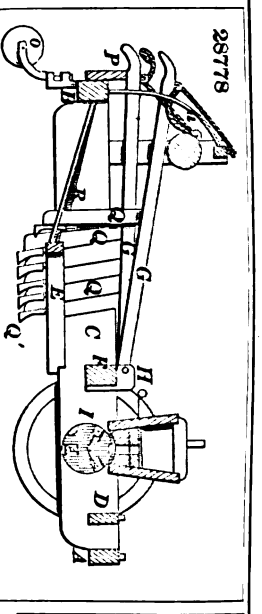

28780

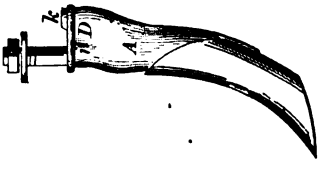

28781

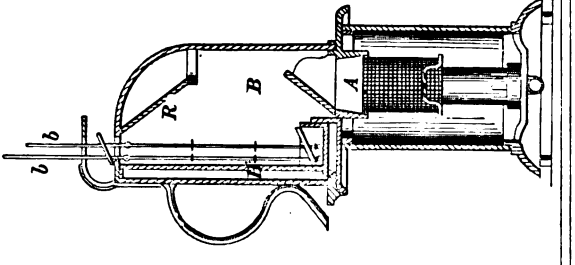

28783

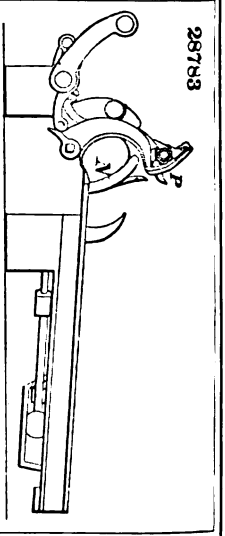

28784

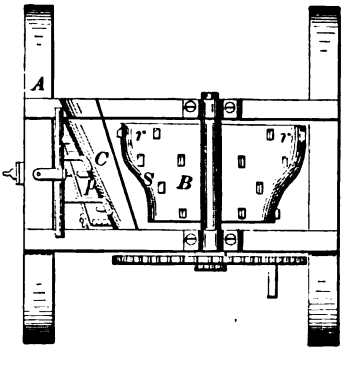

28782

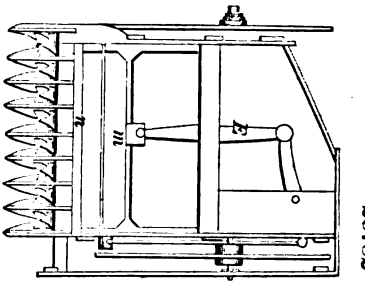

28785

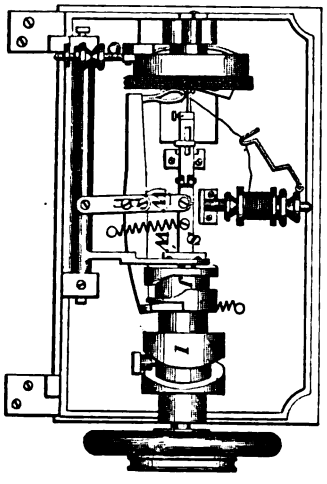

28787

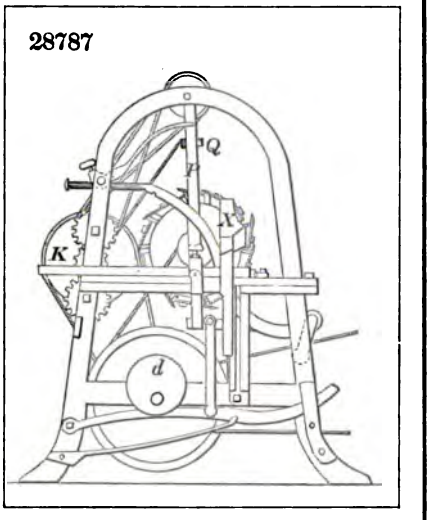

28788

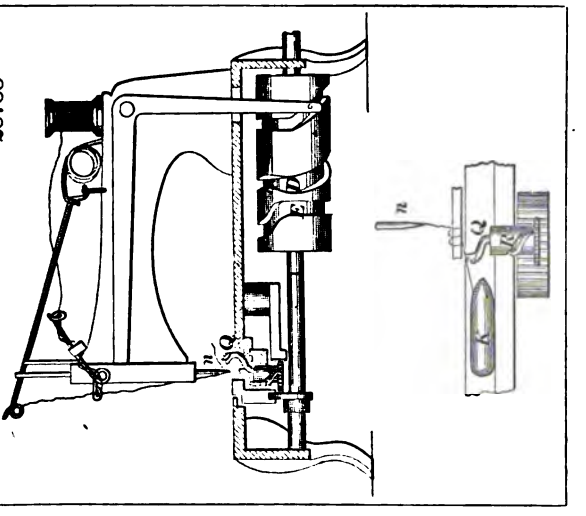

28790

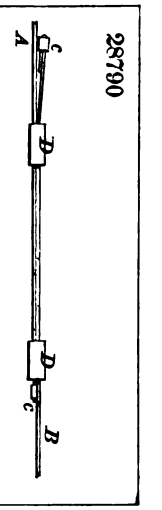

28789

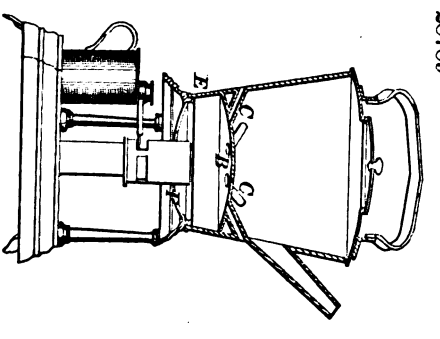

28786

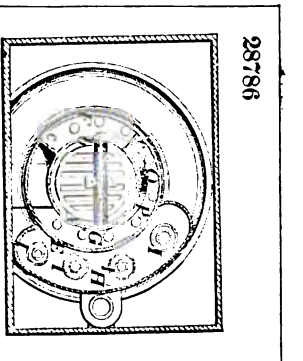

28794

28792

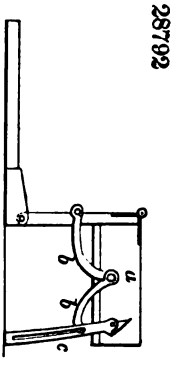

28791

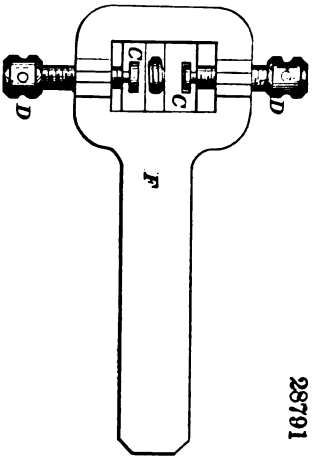

28796

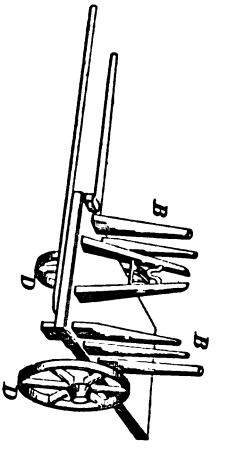

28797

28795

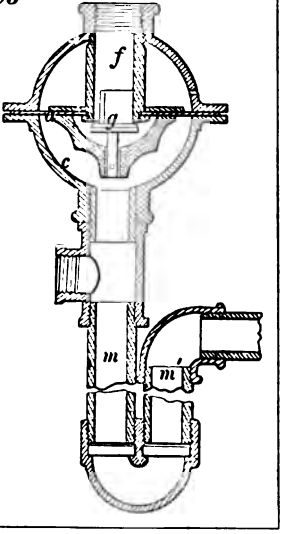

28798

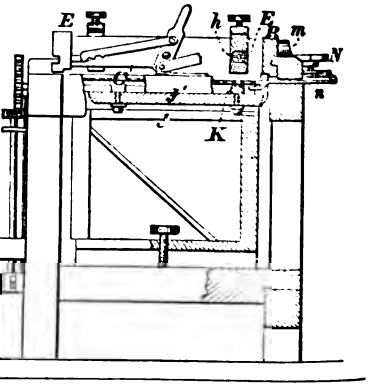

28793

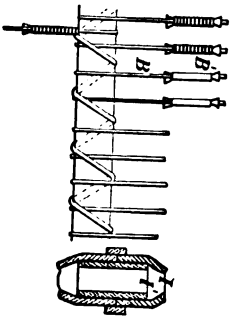

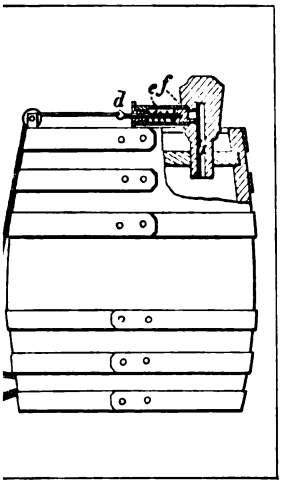

28800

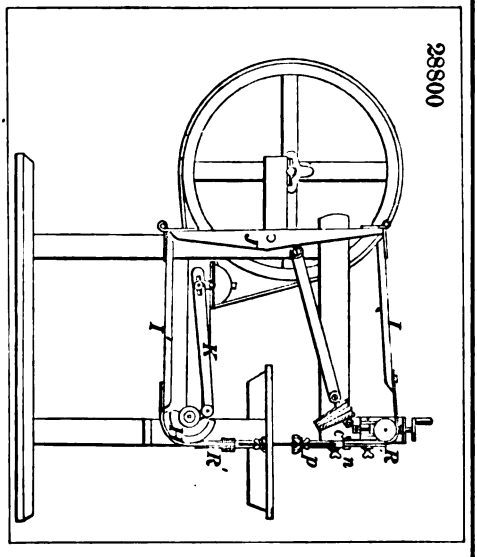

28801

Fig. 1

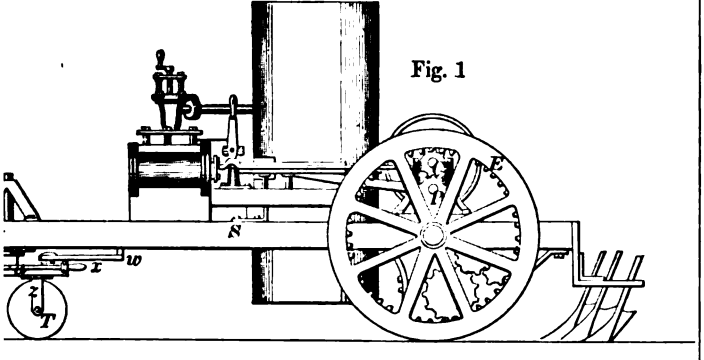

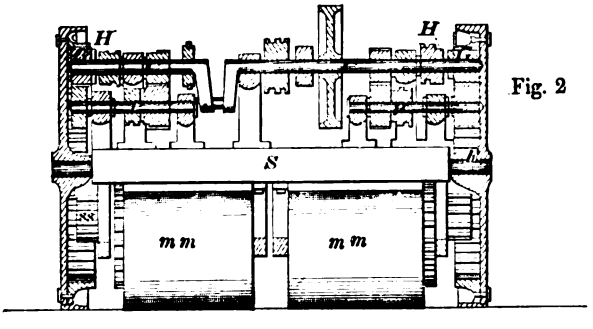

Fig. 2

28802

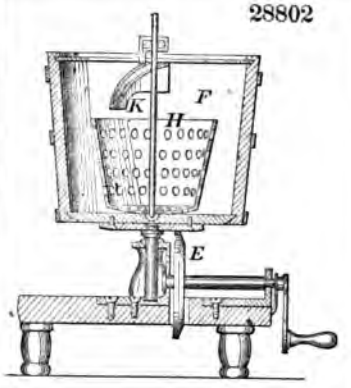

28803

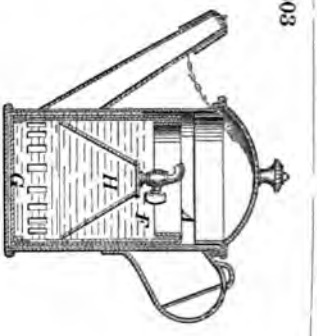

28804

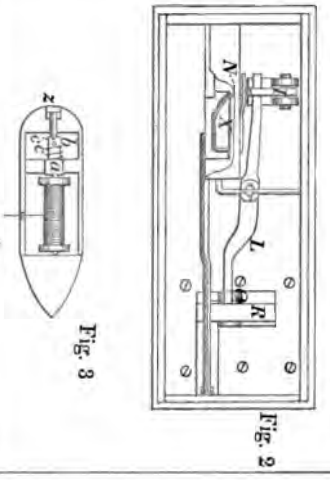

28805

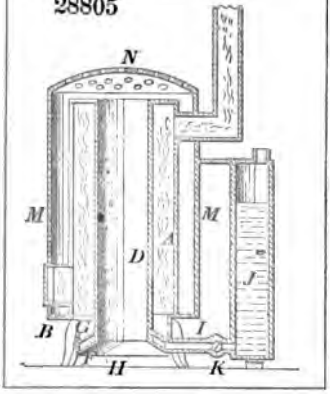

28806

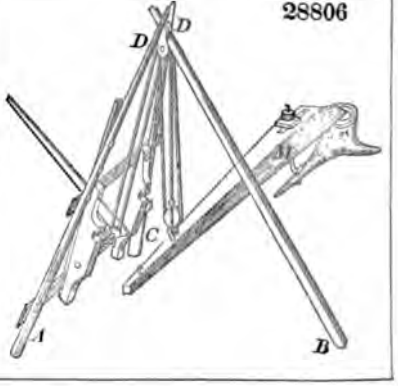

28807

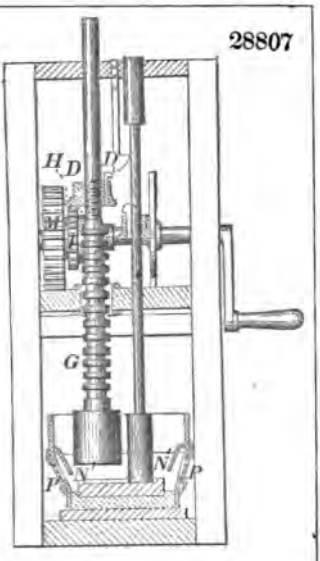

28808

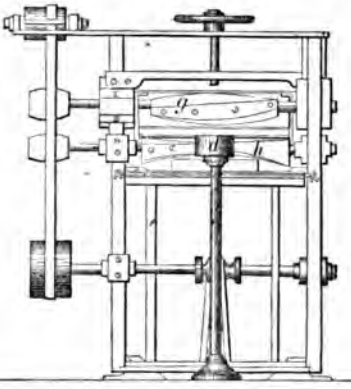

28809

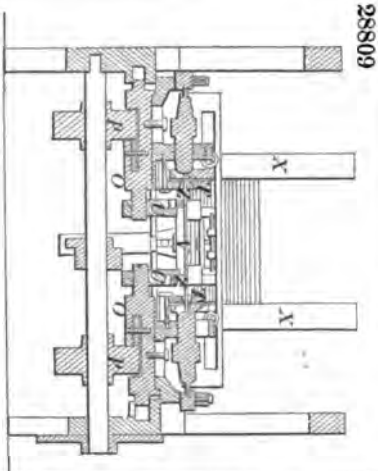

28813

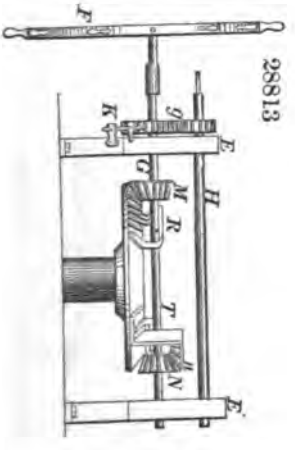

28811

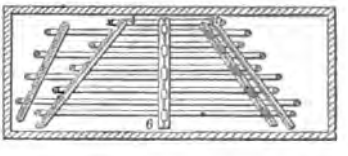

28810

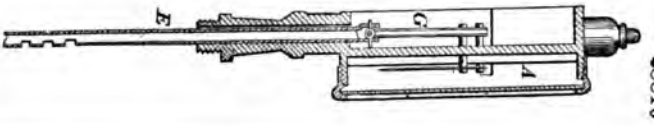

28814

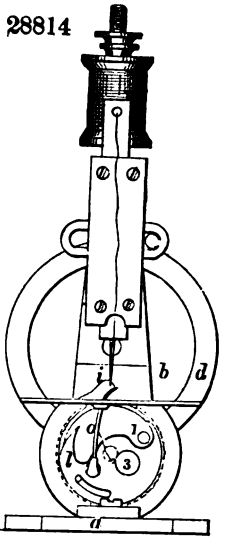

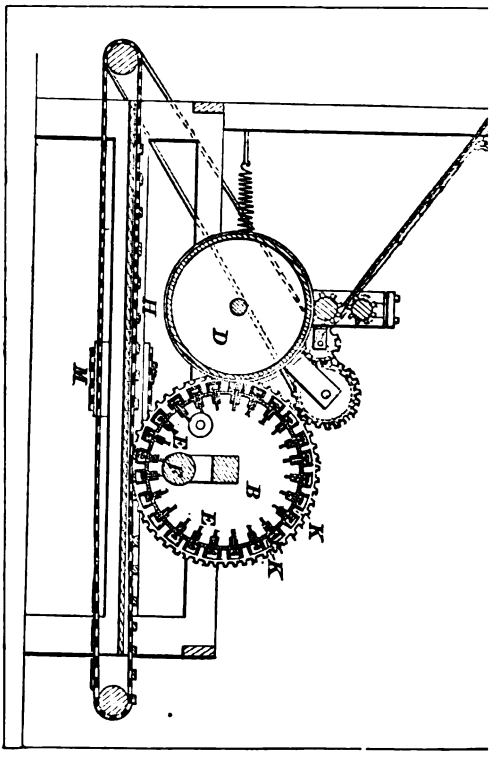

28816

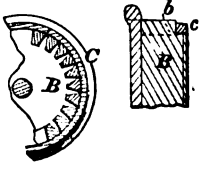

28818

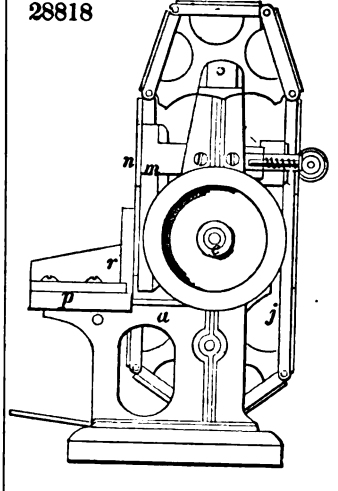

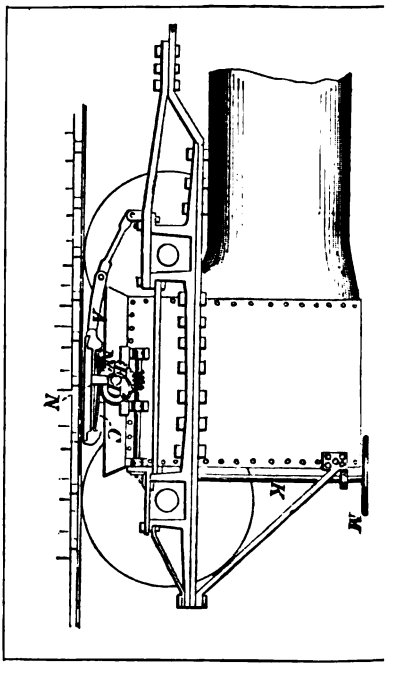

28819

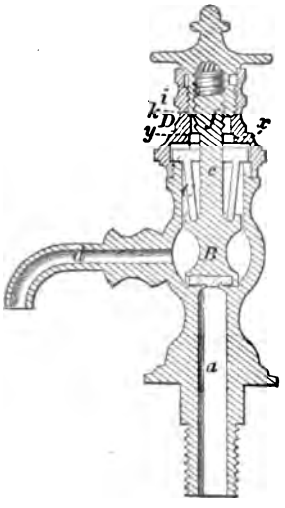

28820

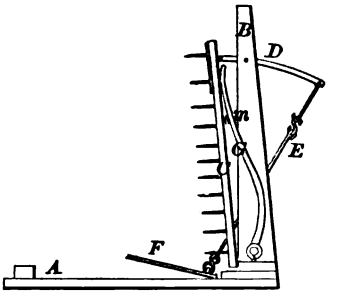

28821

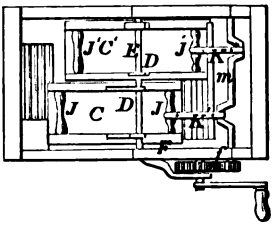

8823

Fig. 1

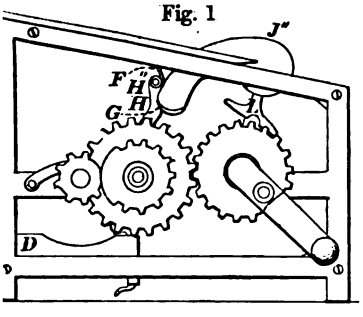

Fig. 2

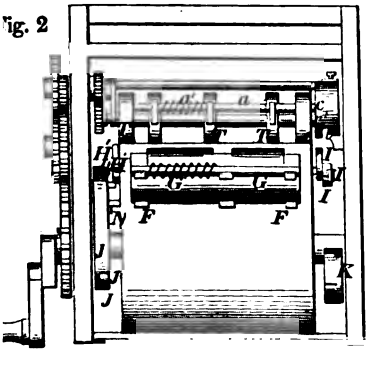

28822

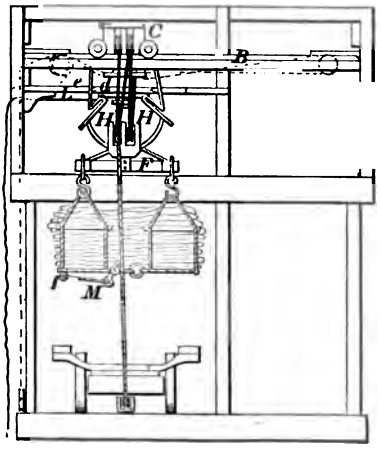

28836

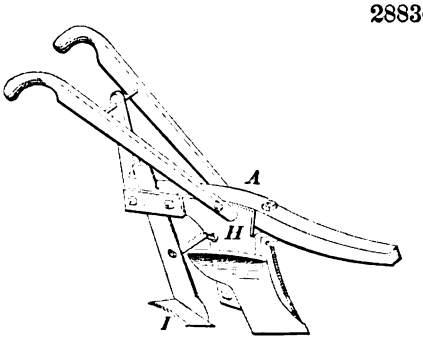

28838

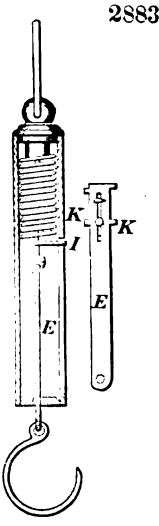

28837

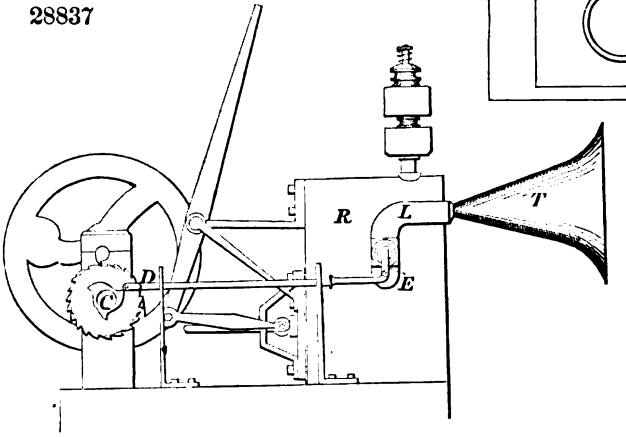

28839

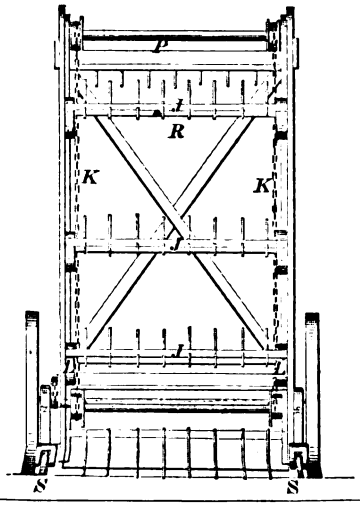

28840

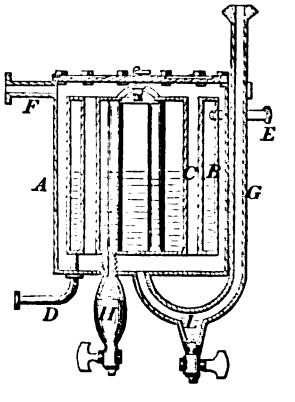

28842

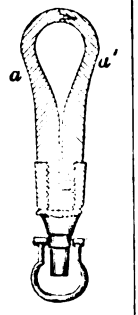

28843

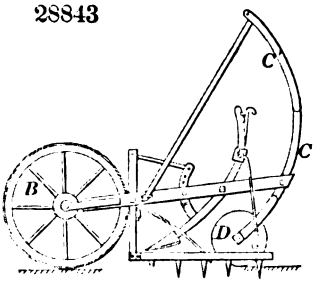

28845

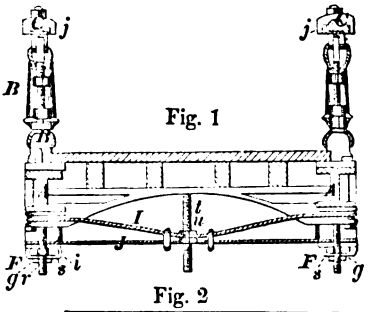

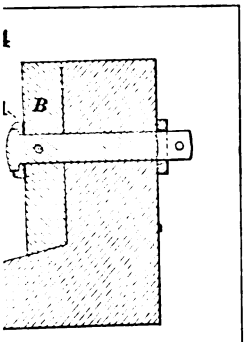

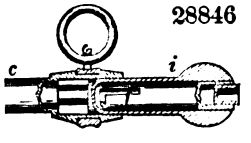

28847

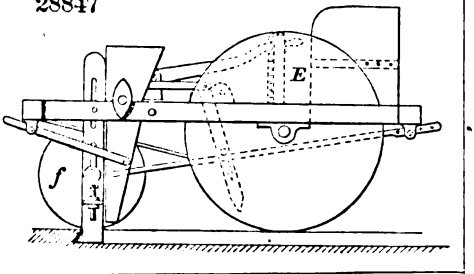

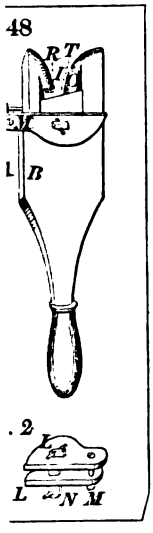

28849

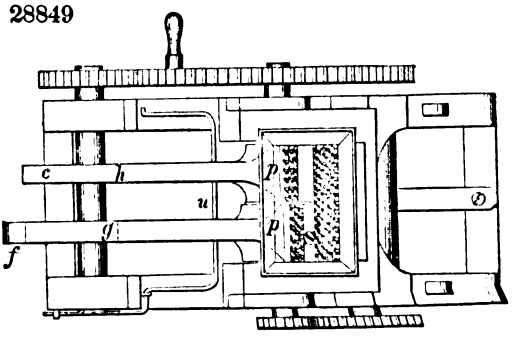

28850

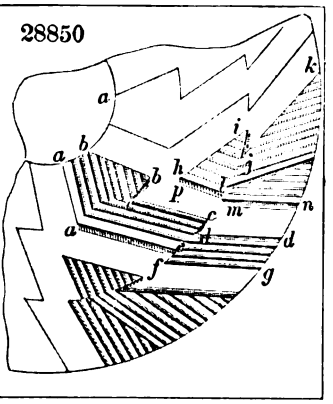

28851

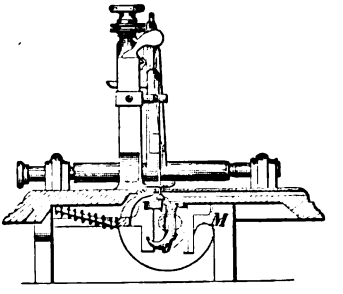

28852

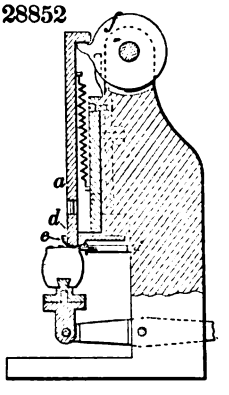

28853

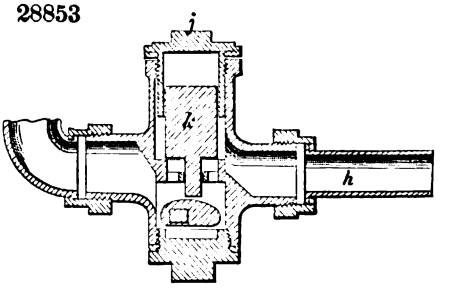

28855

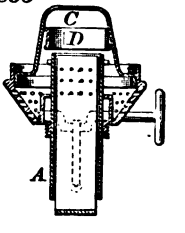

28856

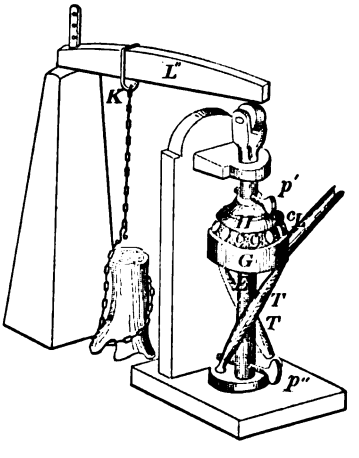

28854

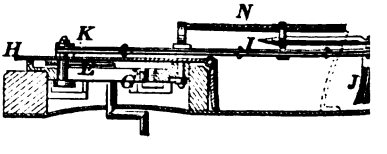

28857

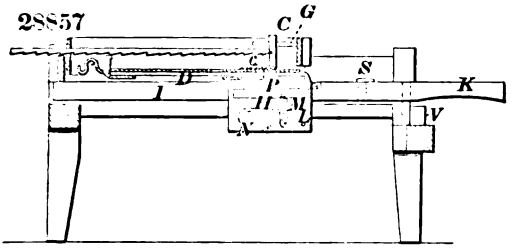

28858

28859

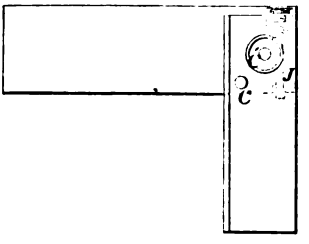

28860

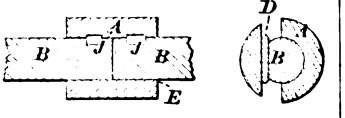

28861

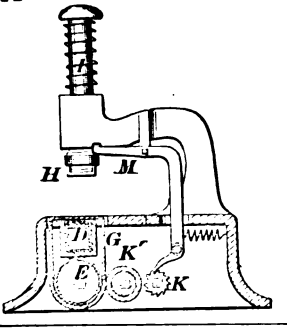

28862

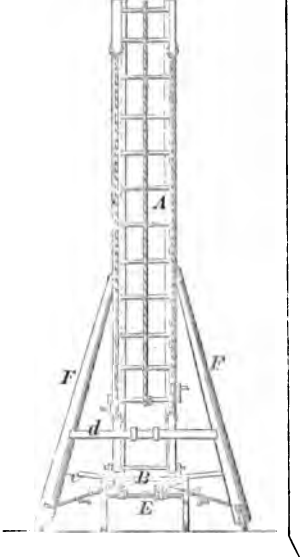

28863

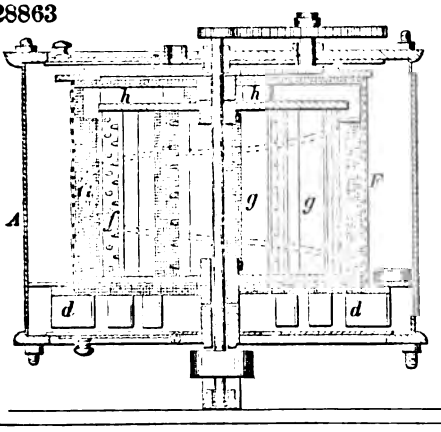

28864

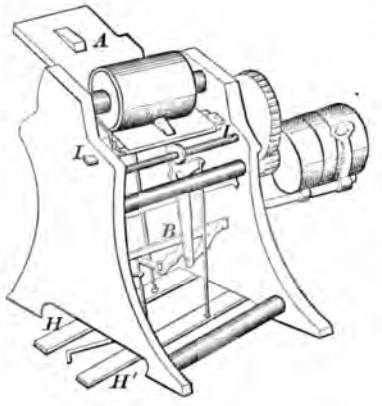

28865

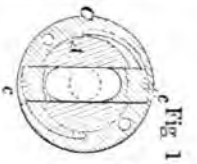

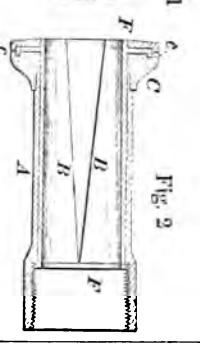

28866

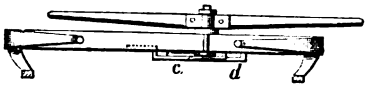

28867

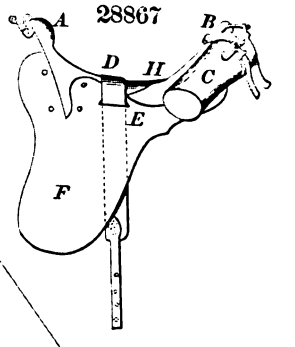

28868

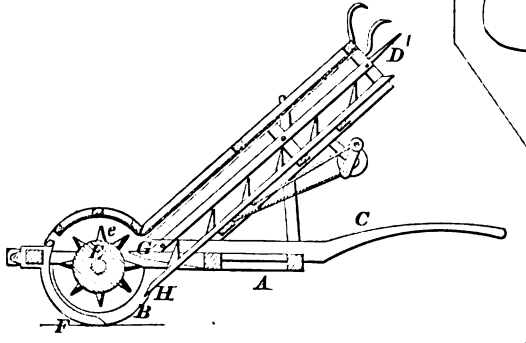

28869

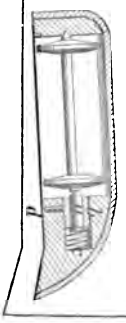

28870

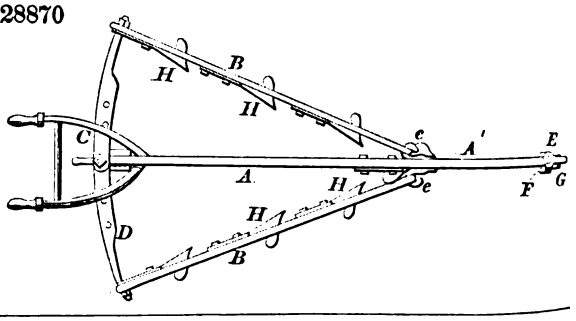

Fig. 1.

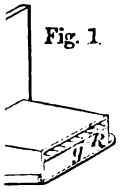

Fig. 2

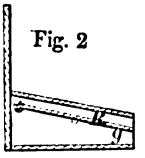

28872

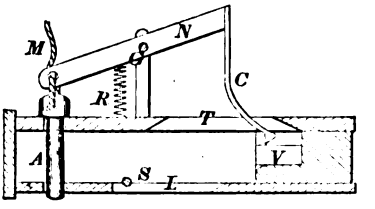

73

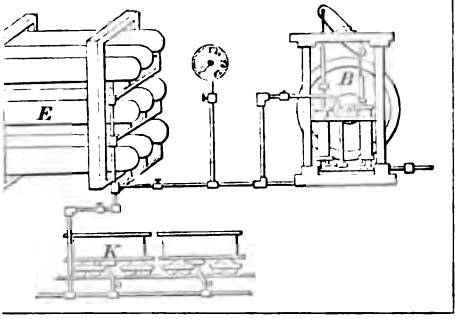

28874

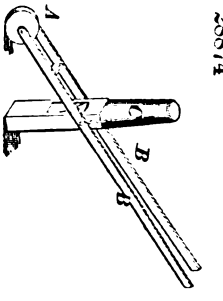

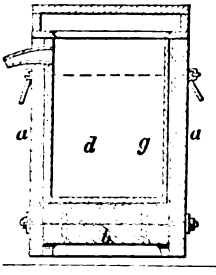

28877

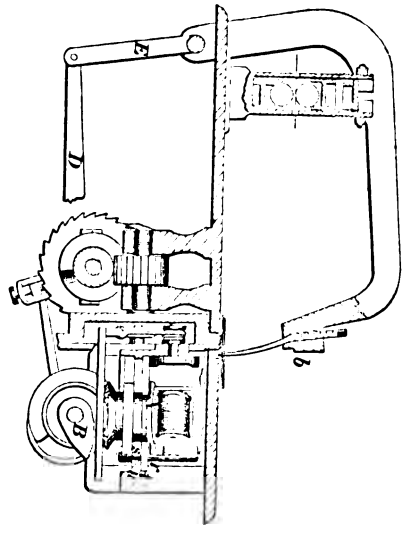

28878

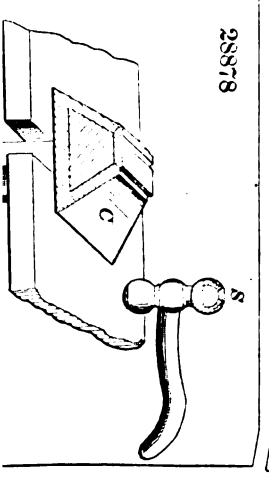

28879

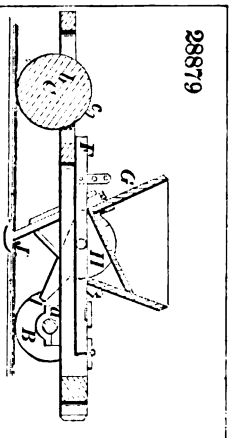

28880

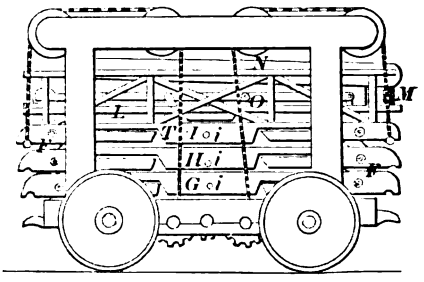

28881

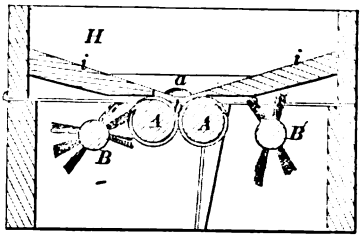

28883

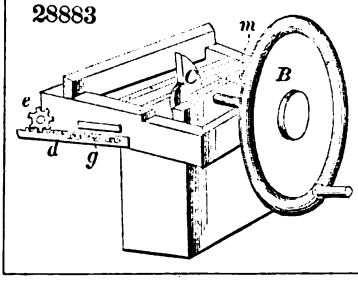

28884

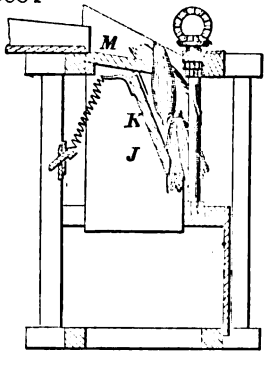

28885

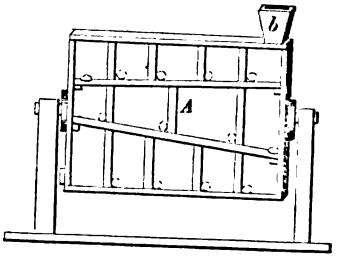

28886 Fig. 1

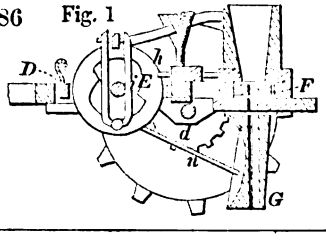

Fig. 2

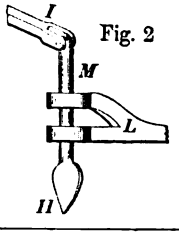

8888

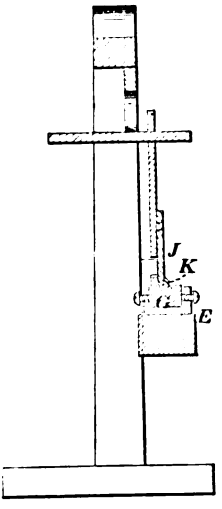

28887

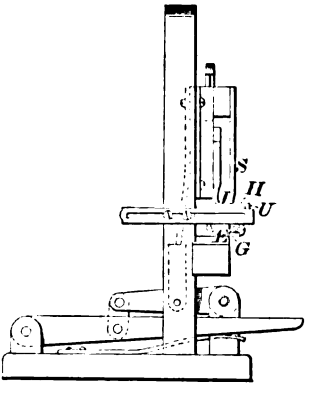

8889

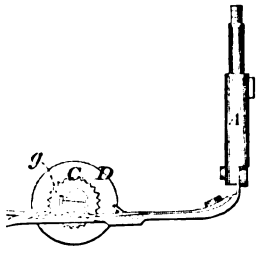

28890

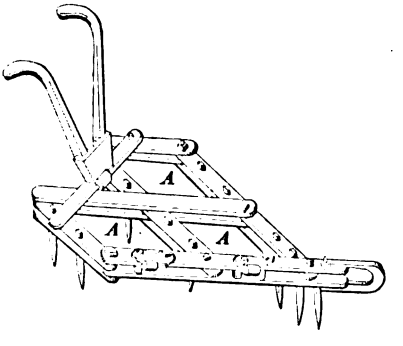

891

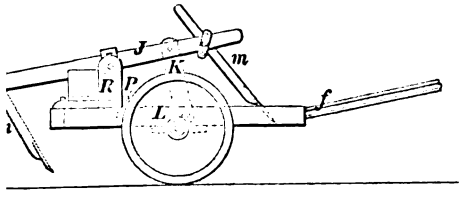

28892

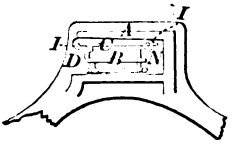

28836

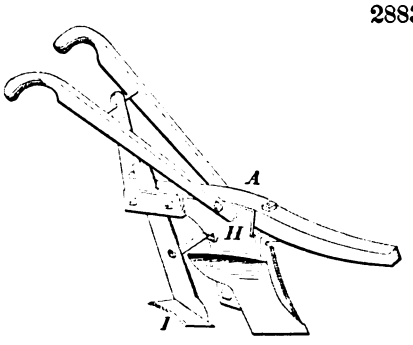

28838

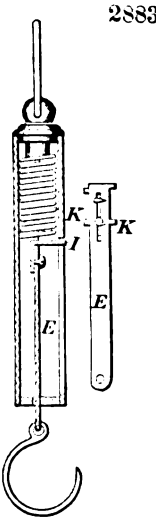

28837

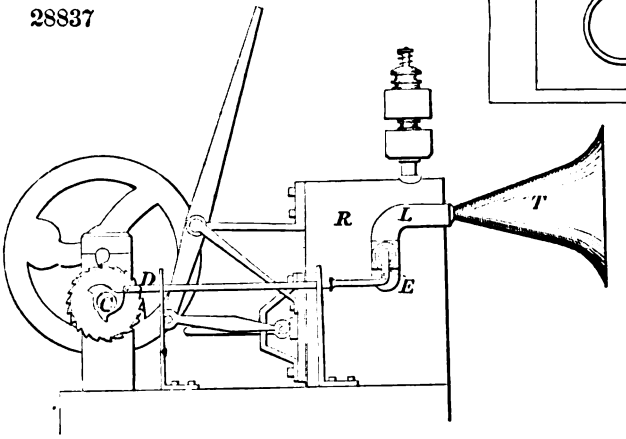

28839

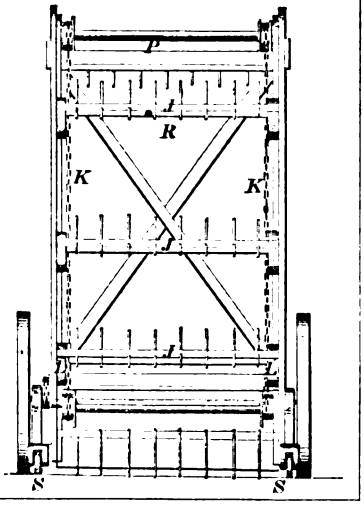

28840

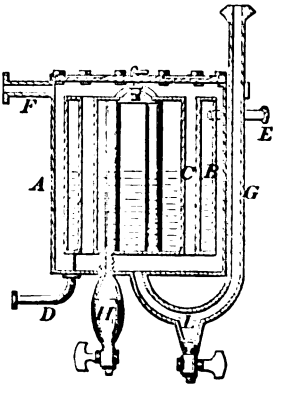

41

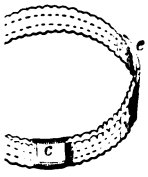

28842

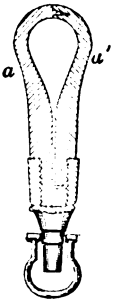

28843

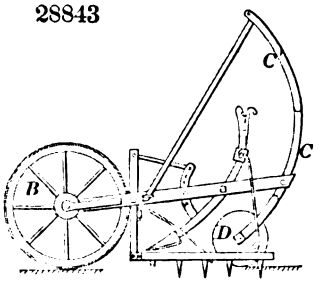

4

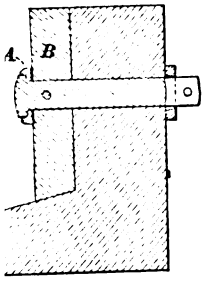

28845

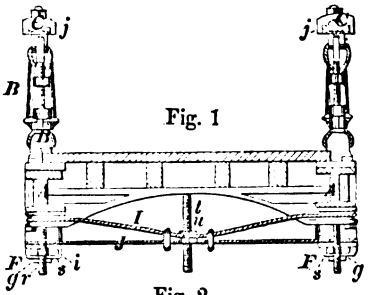

Fig. 1

Fig. 2

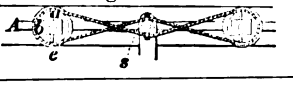

28846

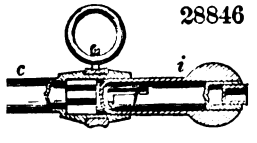

28847

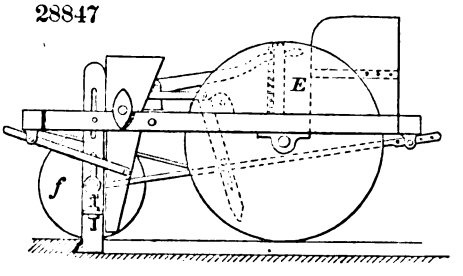

348

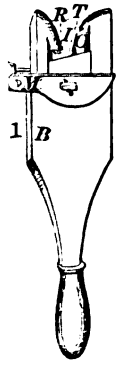

. 2

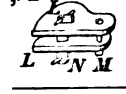

28849

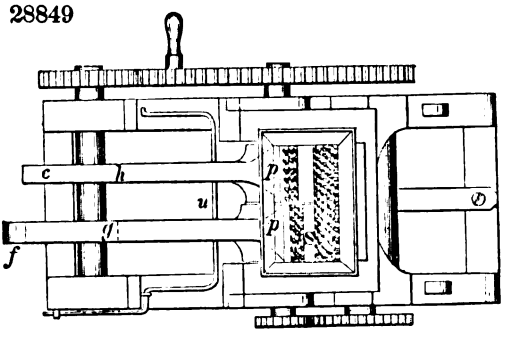

28850

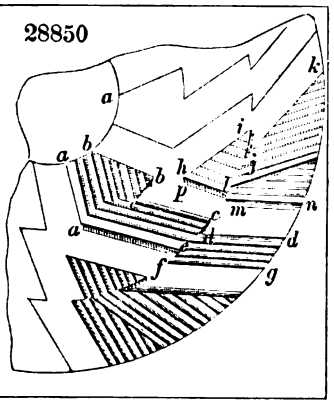

28851

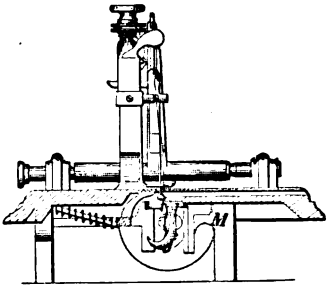

28852

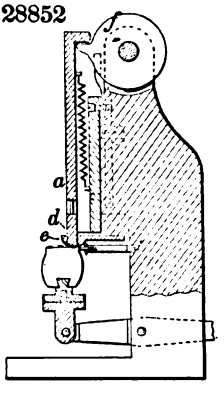

28853

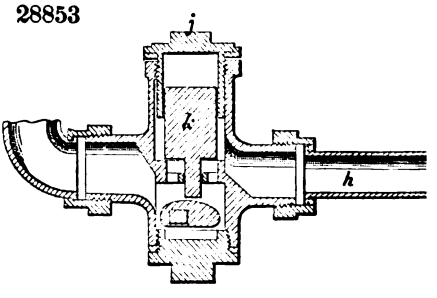

28855

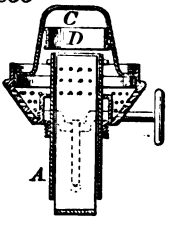

28856

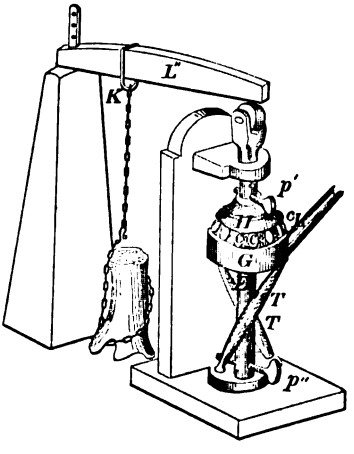

28854

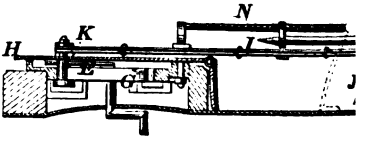

28857

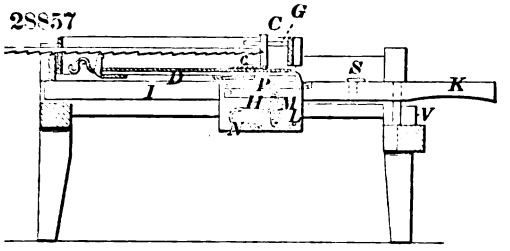

28858

28859

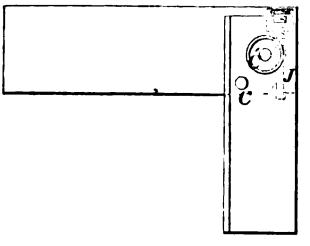

28860

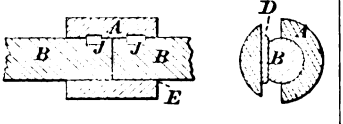

8861

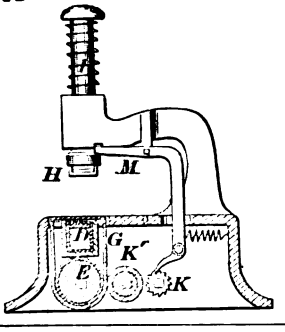

28862

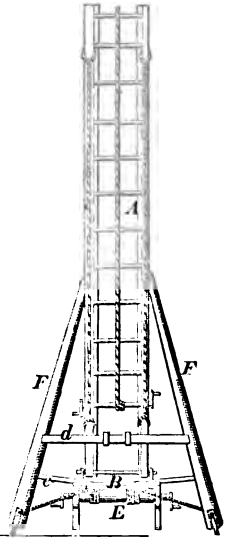

863

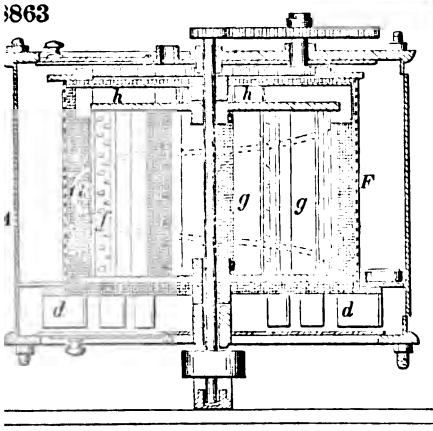

28864

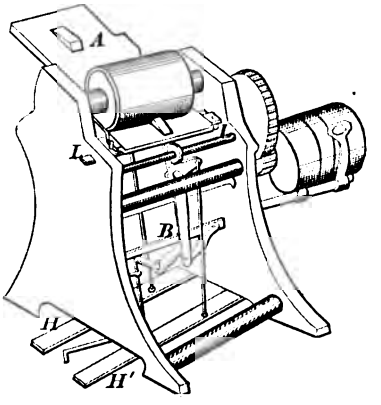

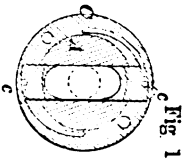

Fig. 1

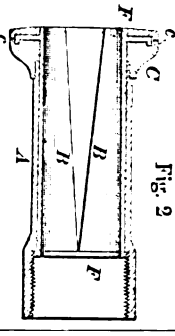

Fig. 2

28866

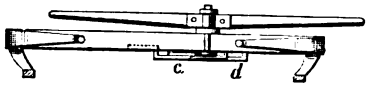

28867

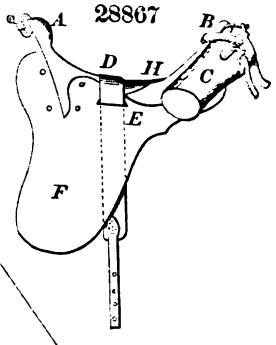

28868

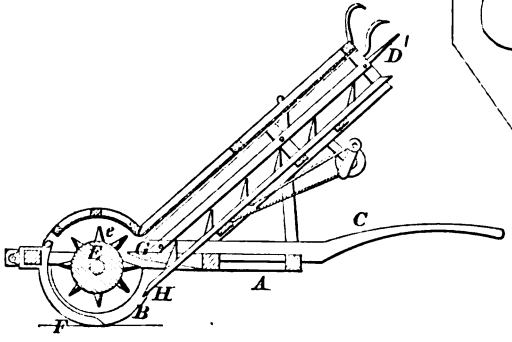

69882

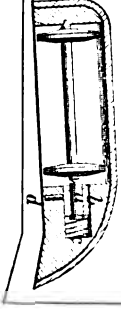

28870

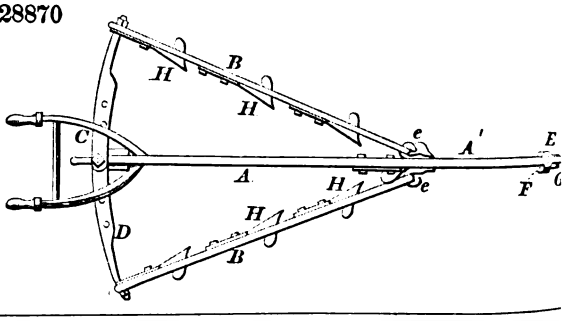

871

Fig. 1.

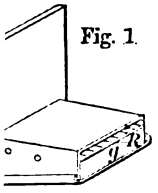

Fig. 2

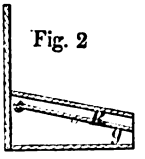

28872

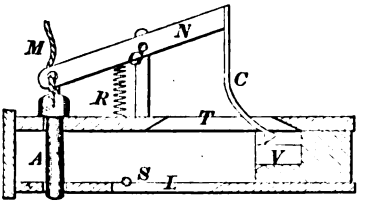

28873

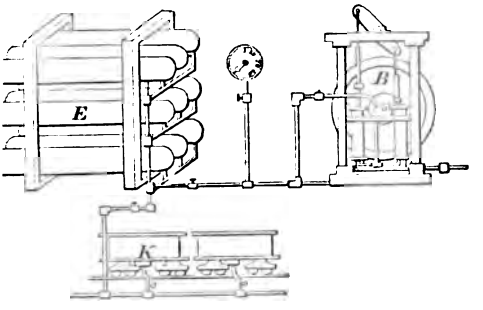

28874

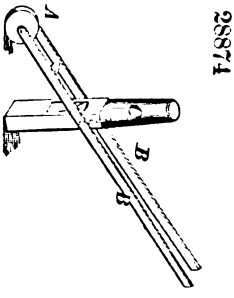

876

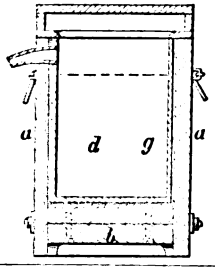

28877

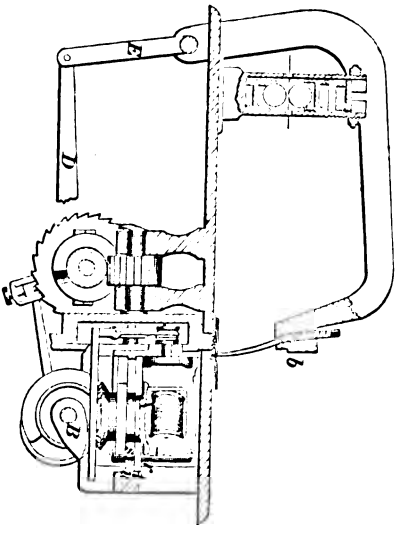

28878

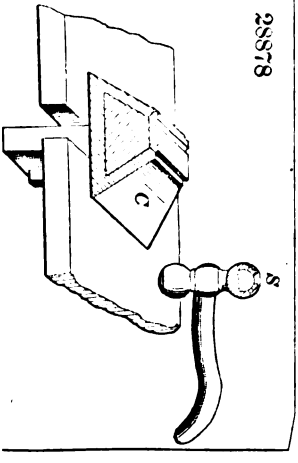

28879

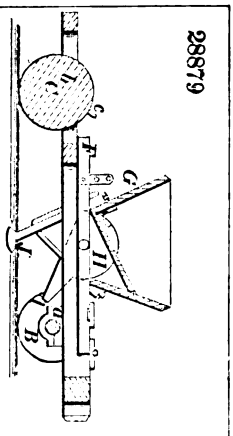

28880

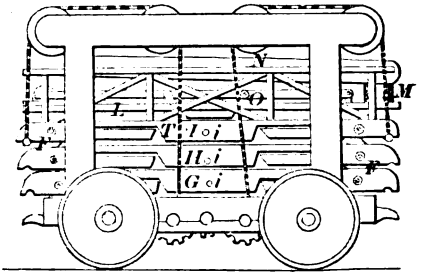

28881

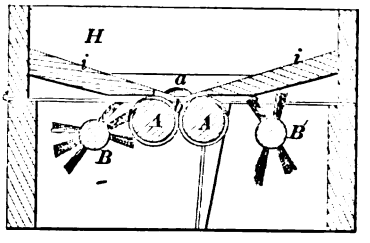

28883

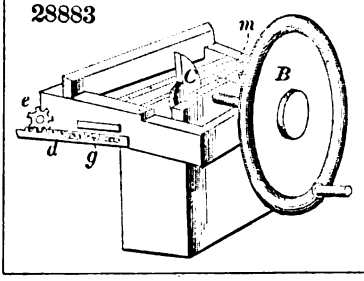

28884

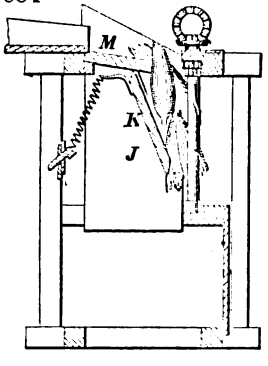

28885

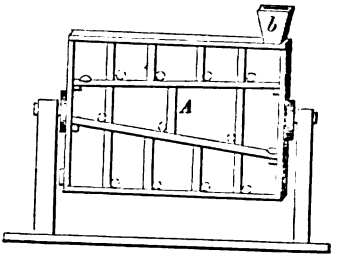

28886 Fig. 1

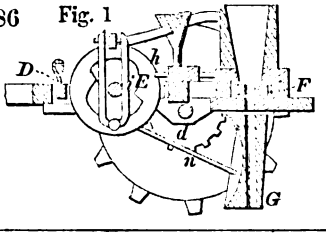

Fig. 2

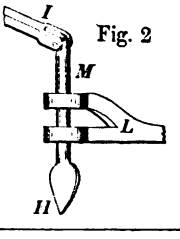

28888

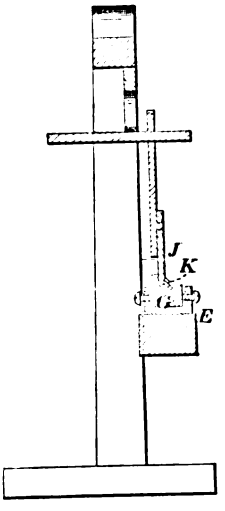

28887

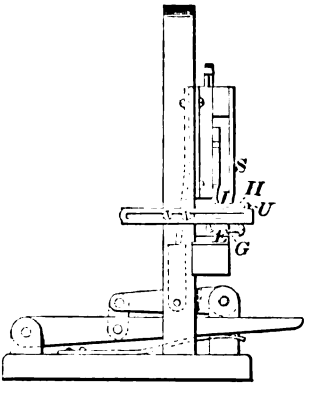

28889

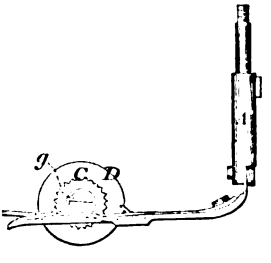

28890

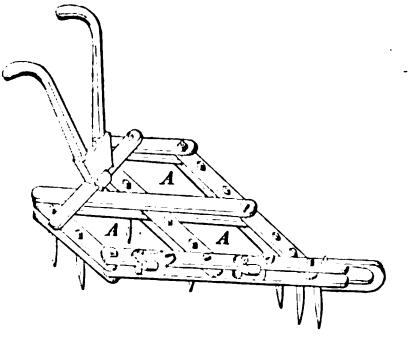

3891

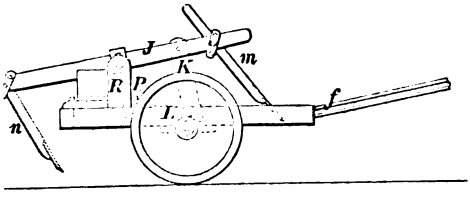

28892

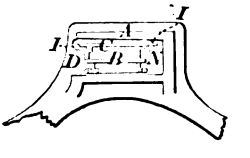

28814

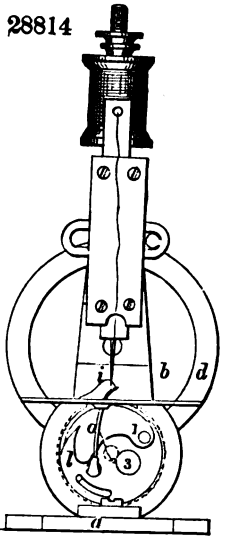

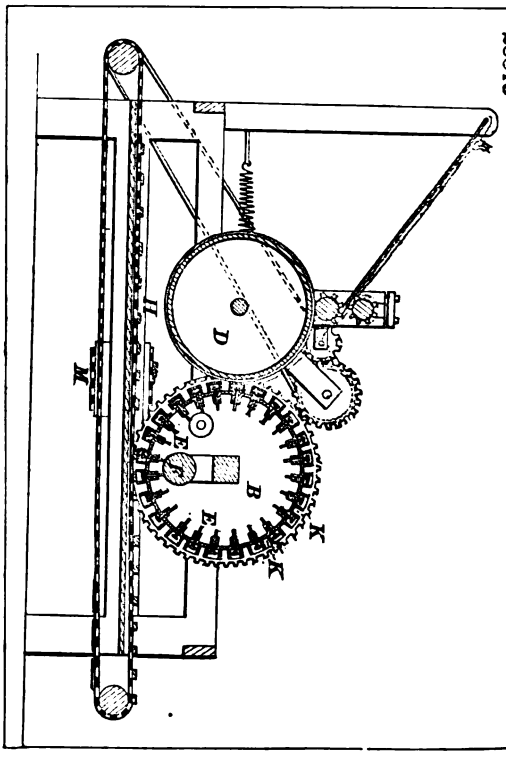

28816

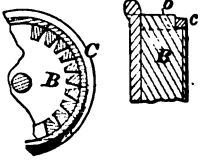

28818

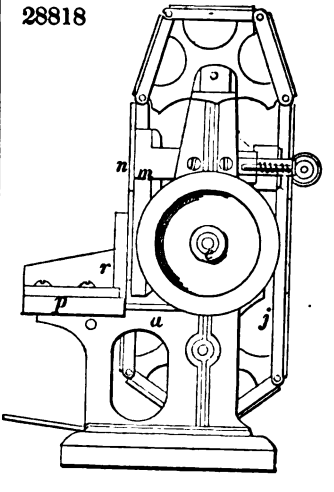

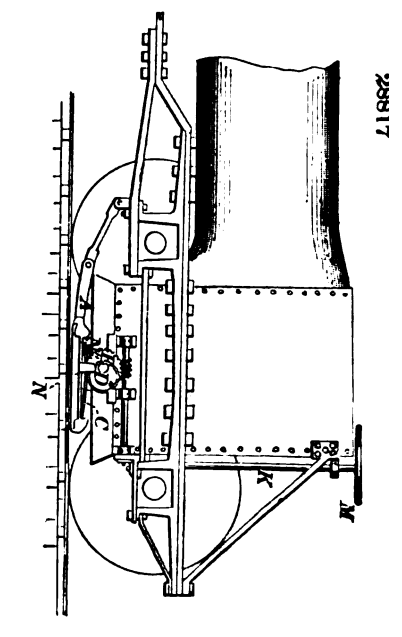

28819

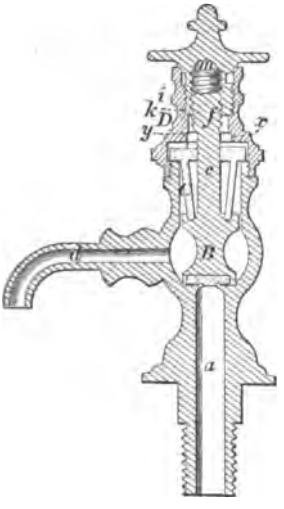

28820

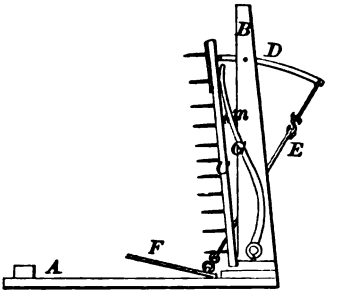

28821

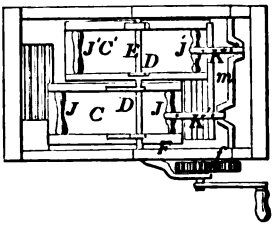

28823

Fig. 1

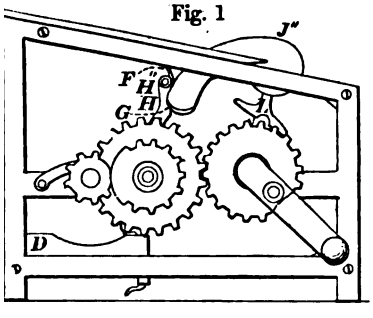

Fig. 2

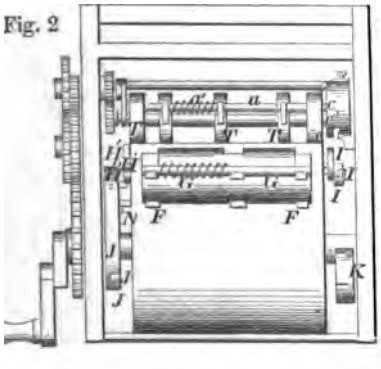

28822

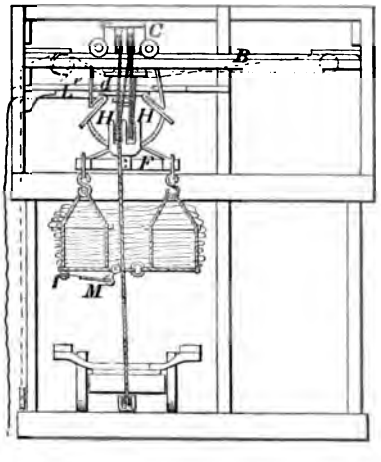

28824

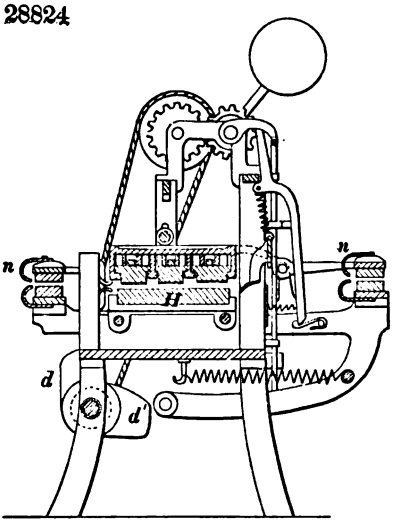

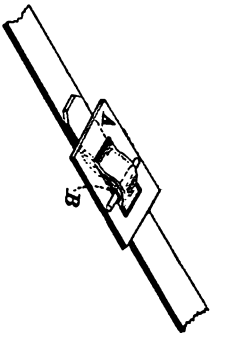

28826

28828

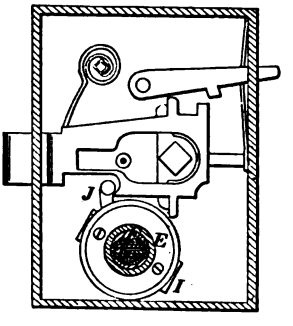

28827

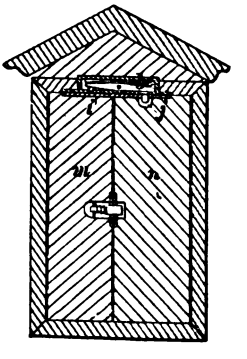

28829

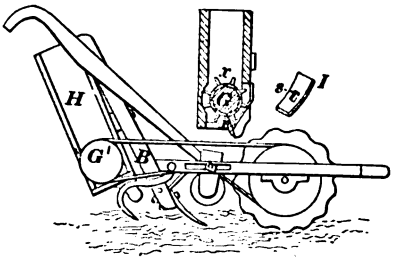

28830

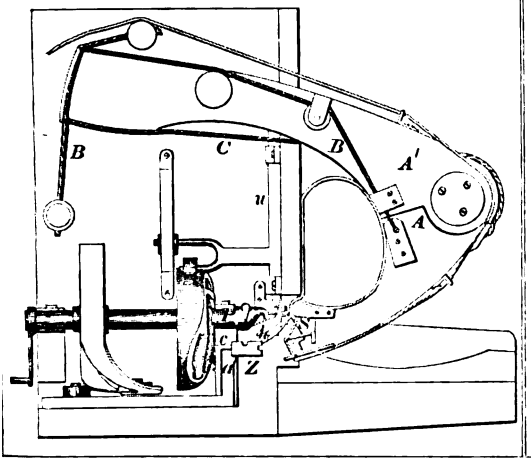

28834

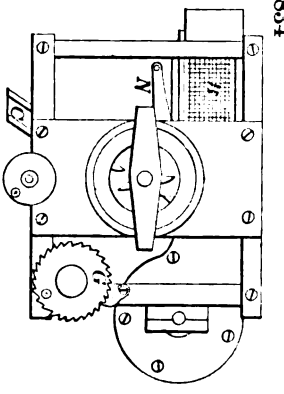

28831

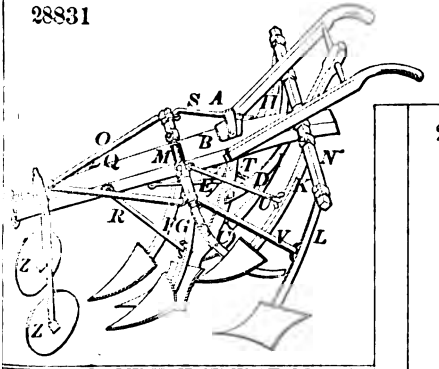

28833

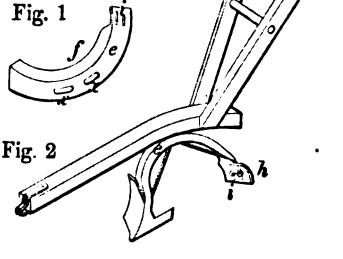

28832

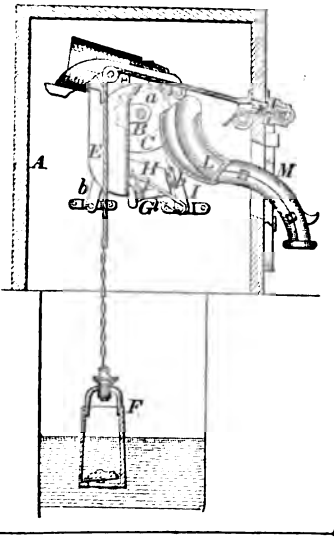

28835

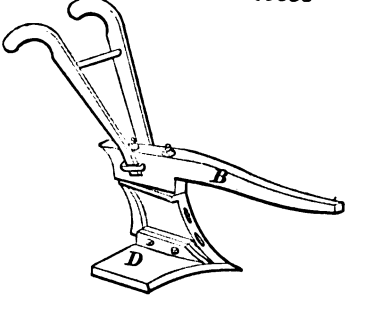

28836

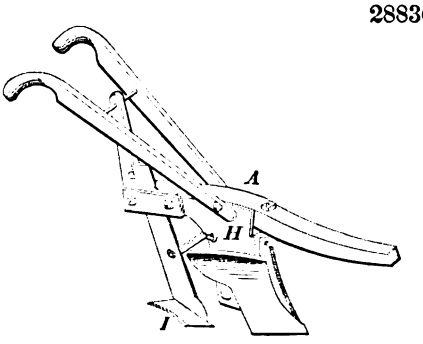

28838

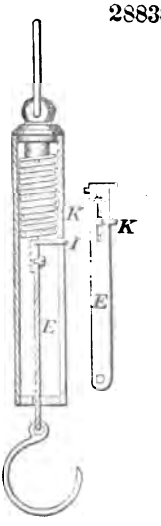

28837

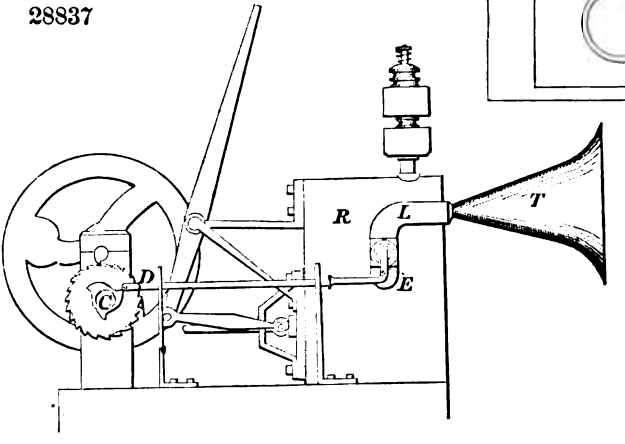

28839

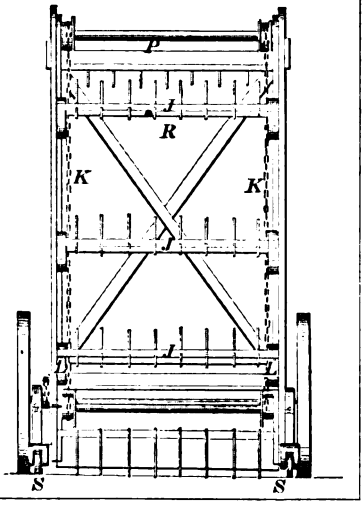

28840

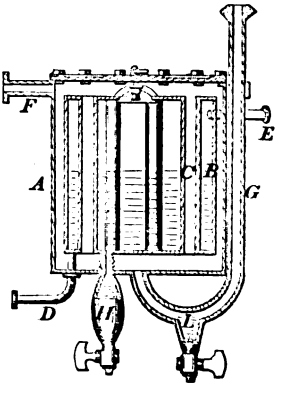

28841

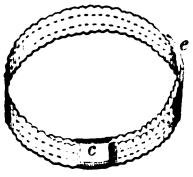

28842

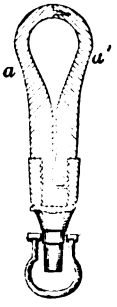

28843

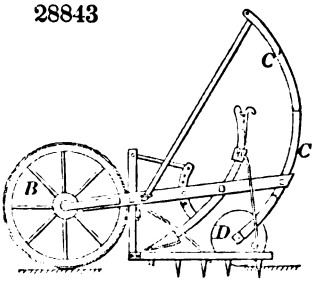

28844

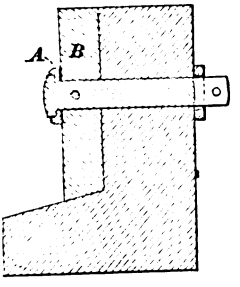

28845

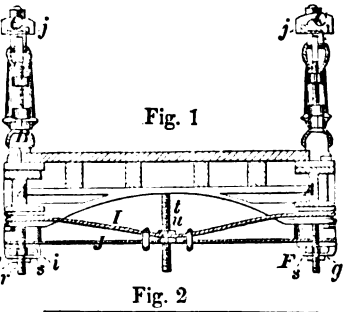

Fig. 1

Fig. 2

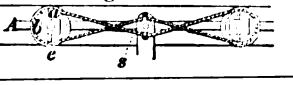

28846

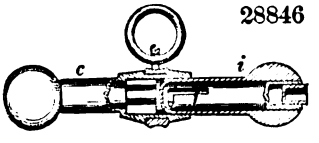

28847

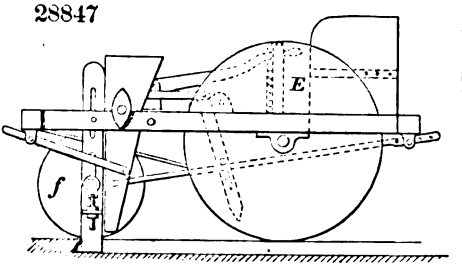

28848

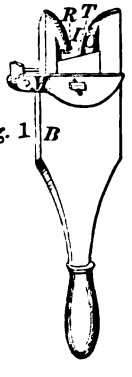

Fig. 1

Fig. 2

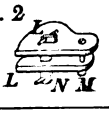

28849

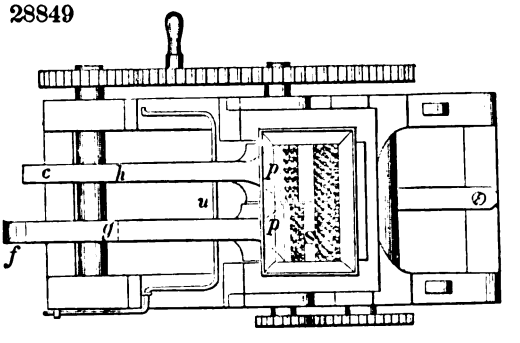

28850

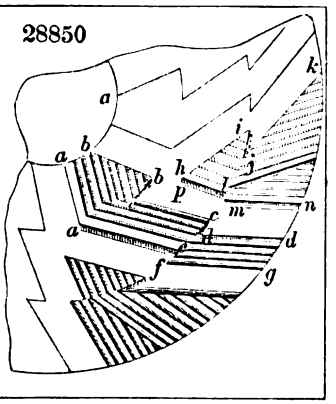

28851

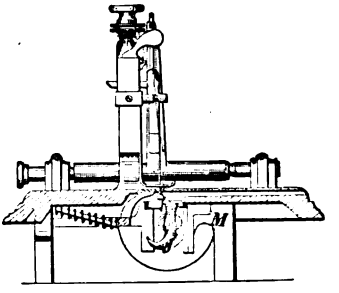

28852

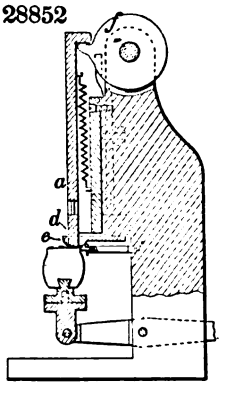

28853

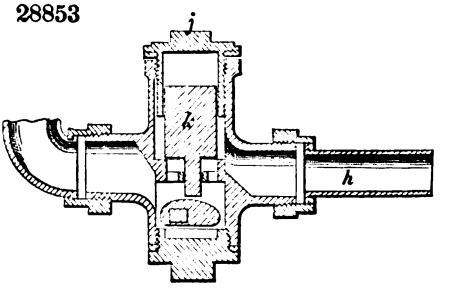

28855

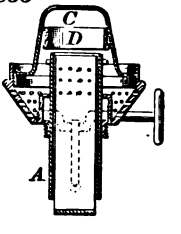

28856

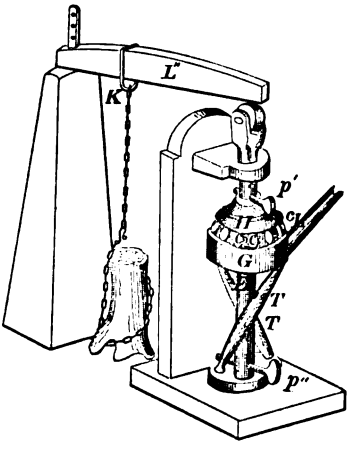

28854

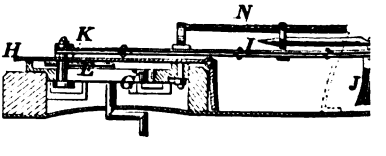

28857

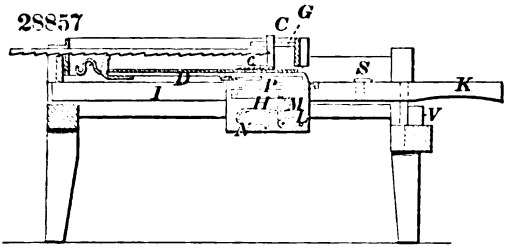

28858

28859

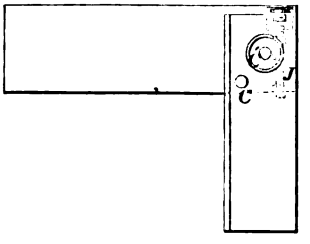

28860

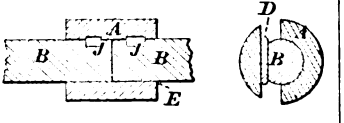

28861

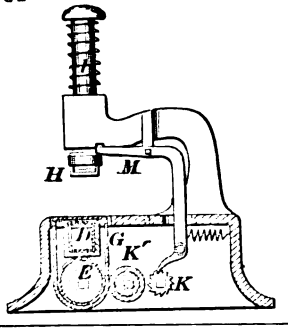

28862

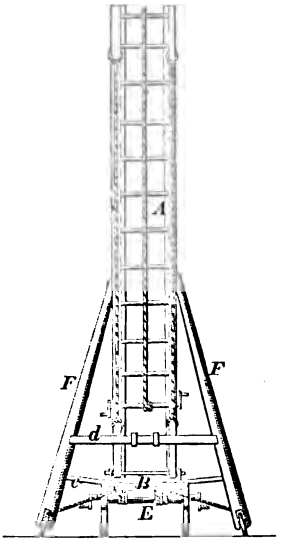

28863

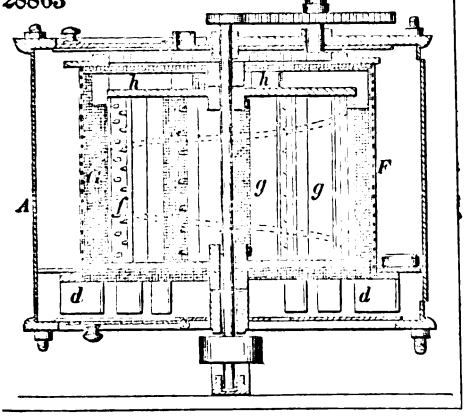

28864

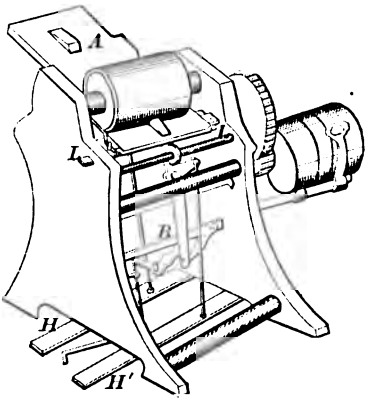

28865

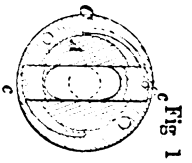

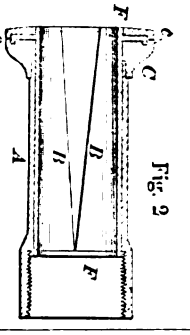

28866

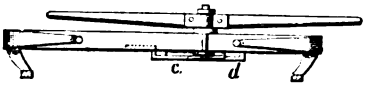

28867

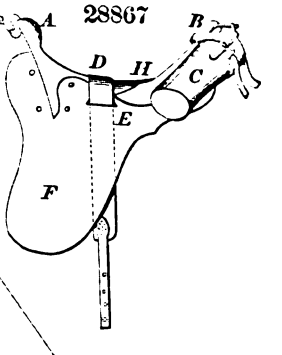

28868

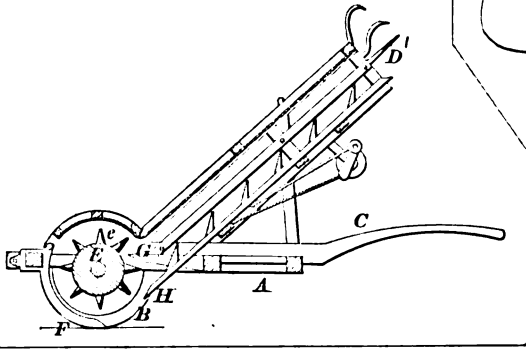

28869

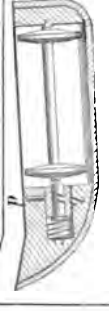

28870

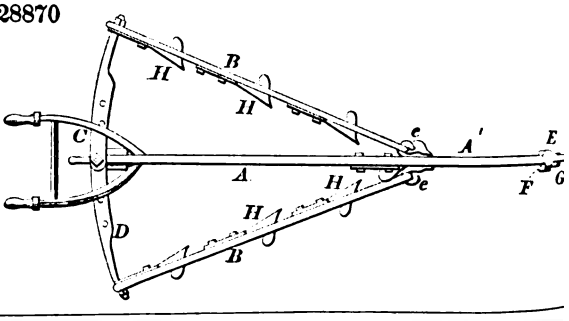

871

Fig. 1.

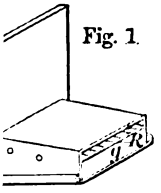

Fig. 2.

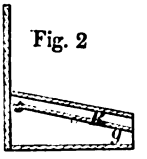

28872

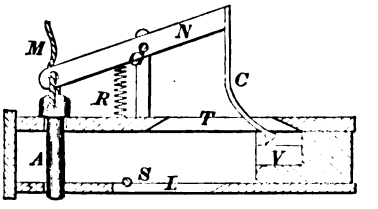

28873

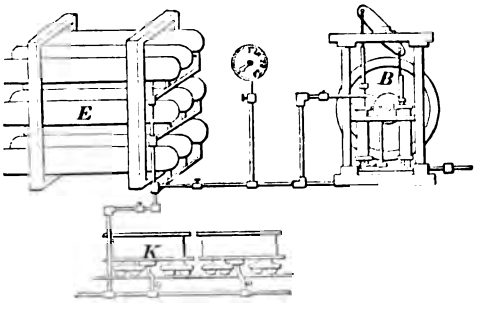

28874

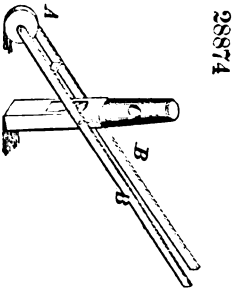

8876

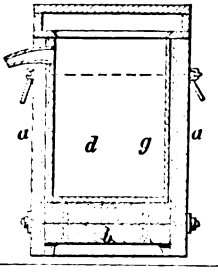

28877

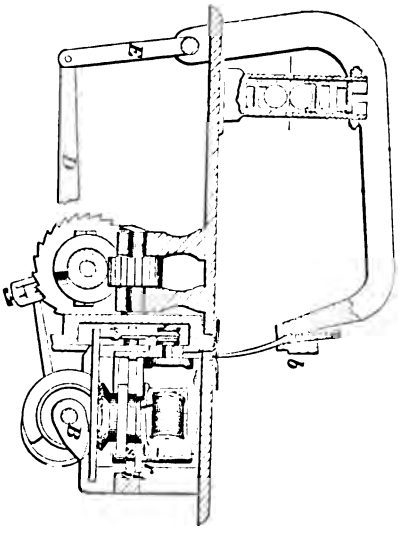

28878

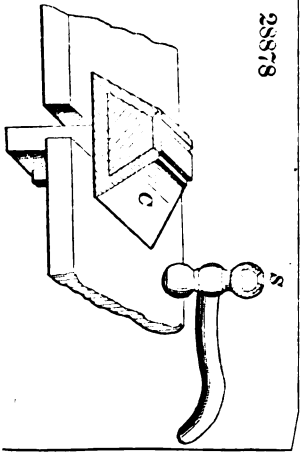

28879

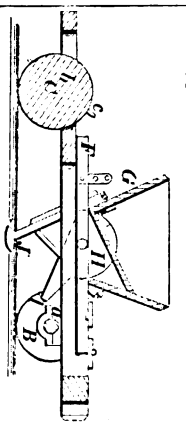

28880

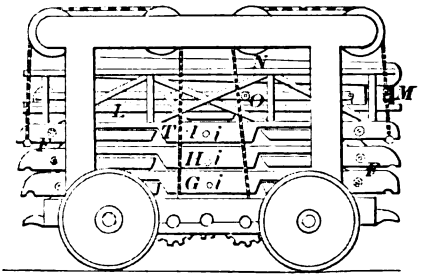

28881

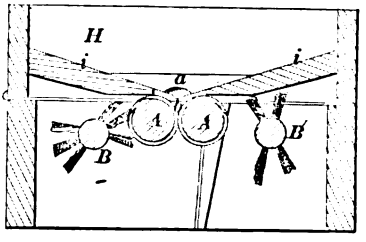

28883

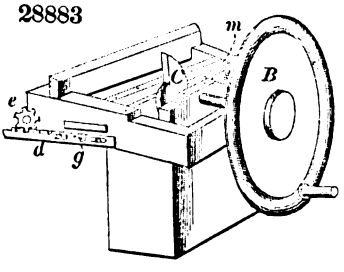

28884

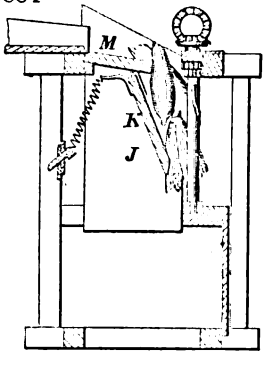

28885

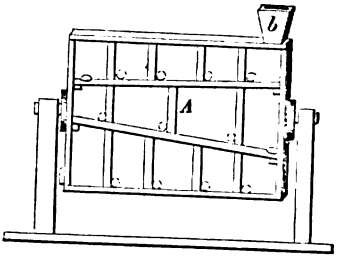

28886 Fig. 1

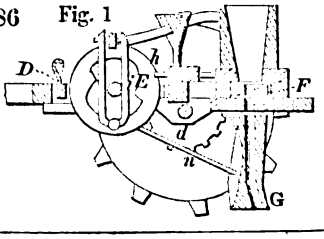

Fig. 2

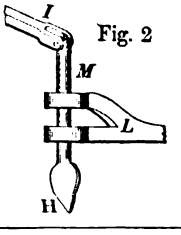

28888

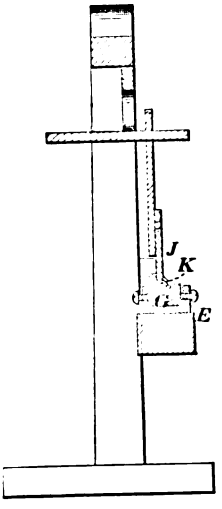

28887

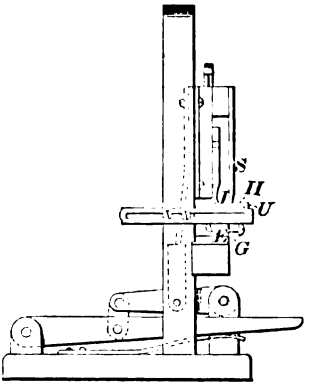

28889

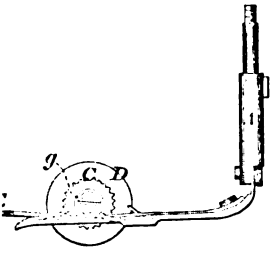

28890

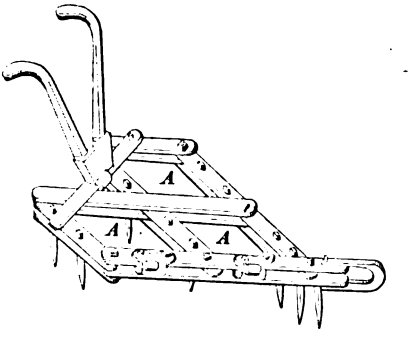

28891

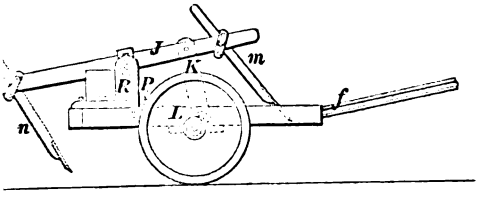

28892

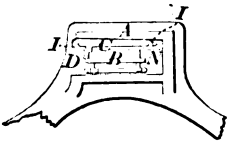

28836

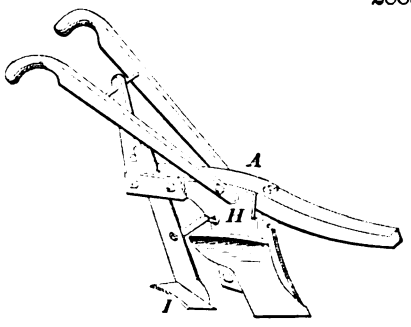

28838

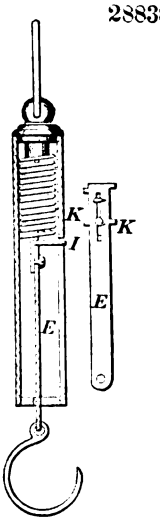

28837

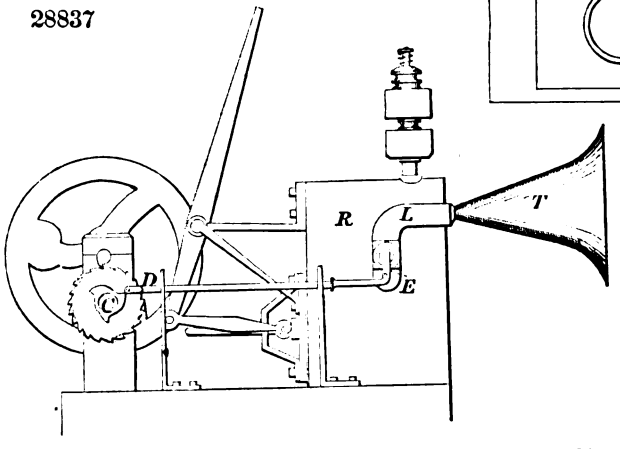

28839

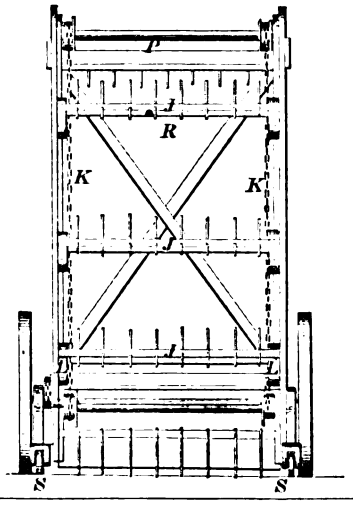

28840

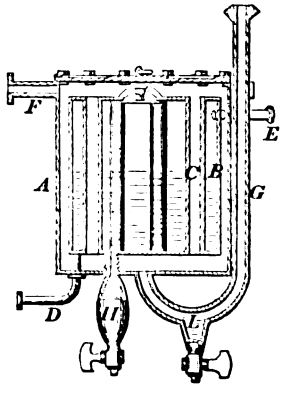

28841

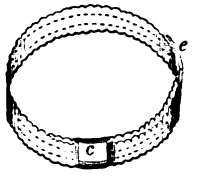

28842

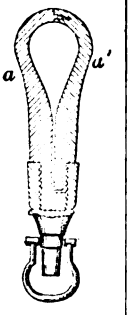

28843

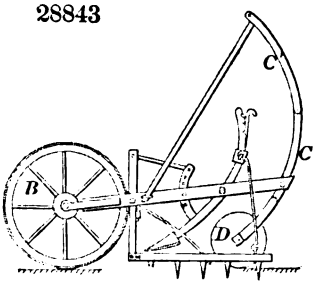

28844

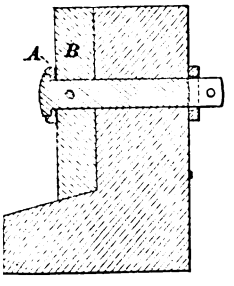

28845

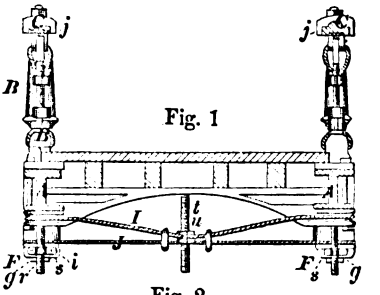

Fig. 2

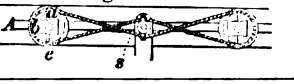

28846

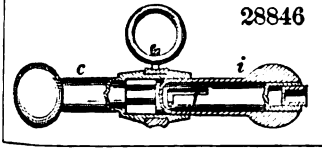

28847

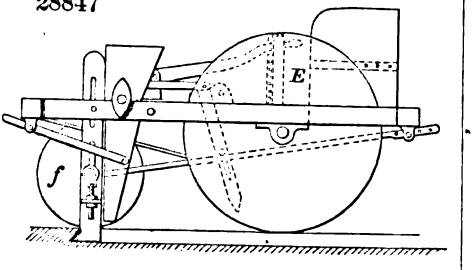

28848

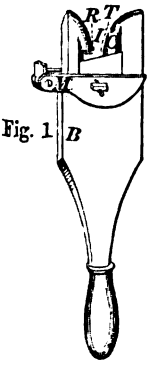

Fig. 2

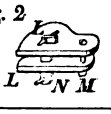

28849

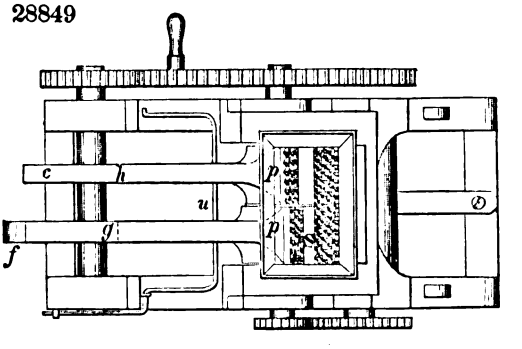

28850

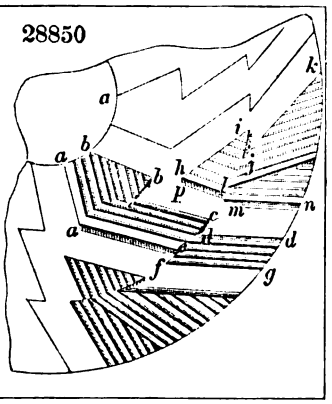

28851

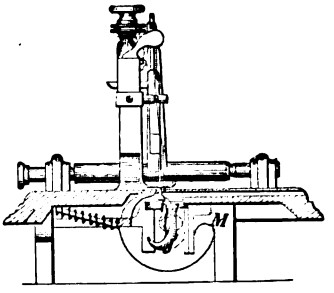

28852

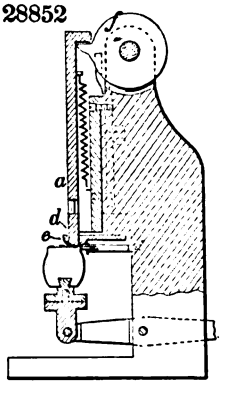

28853

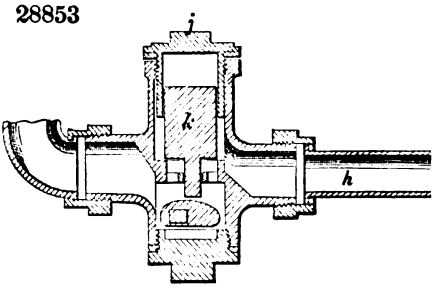

28855

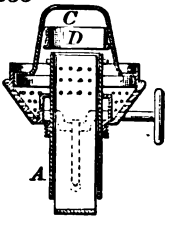

28856

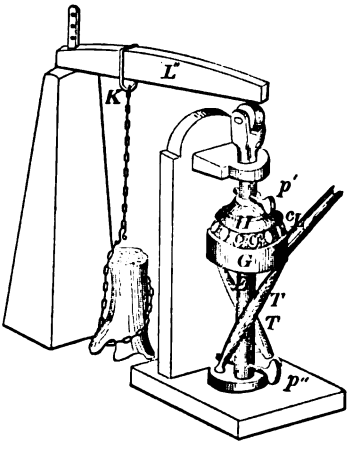

28854

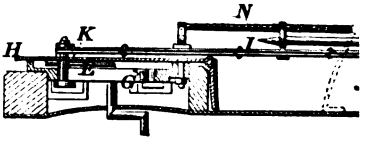

28857

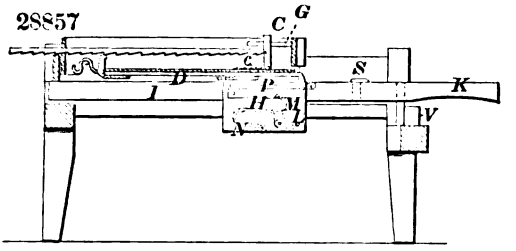

28858

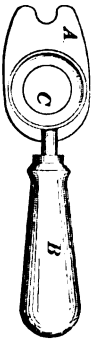

28859

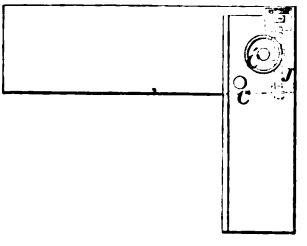

28860

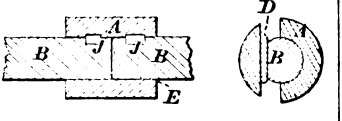

28861

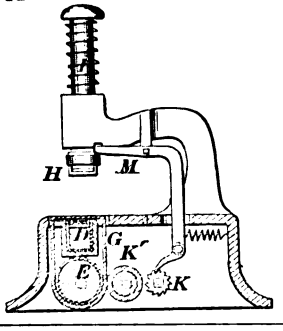

28862

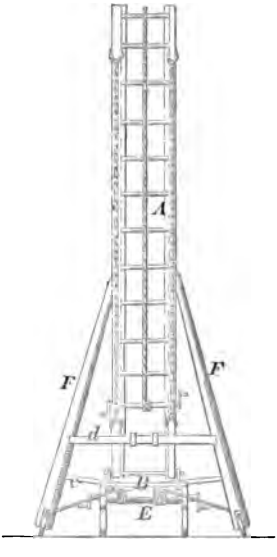

28863

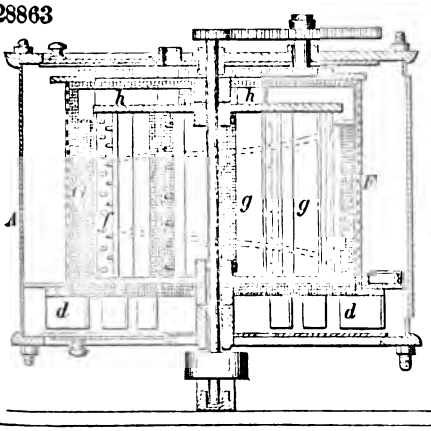

28864

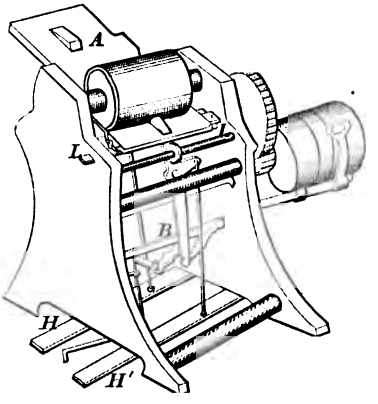

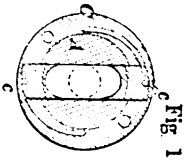

Fig 1

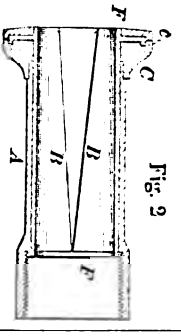

Fig. 2

28866

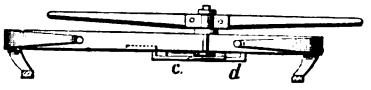

28867

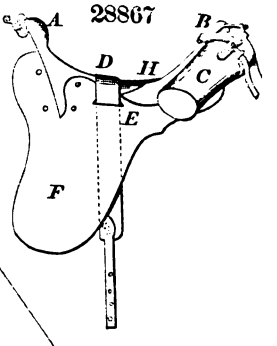

28868

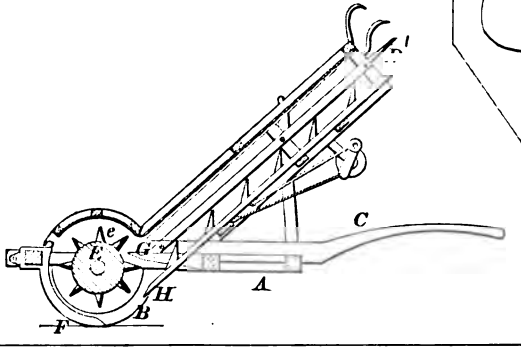

28869

28870

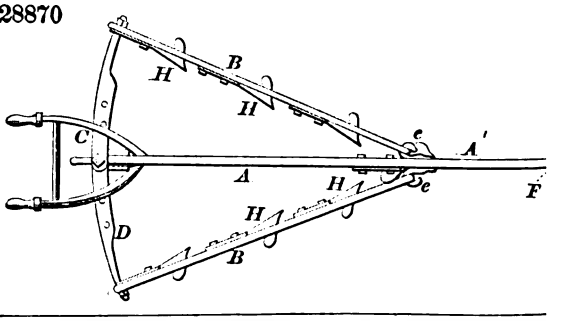

1

Fig. 1.

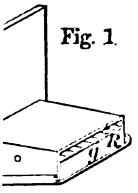

Fig. 2

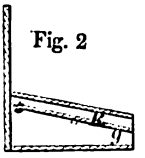

28872

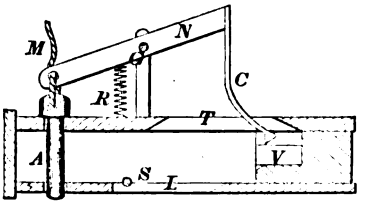

3873

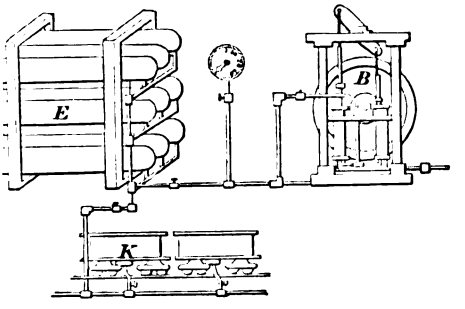

28874

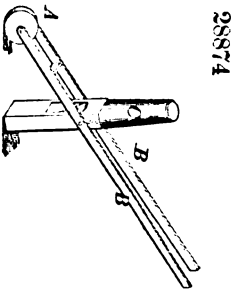

76

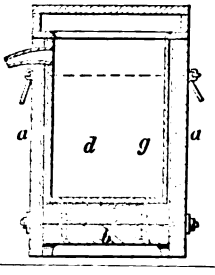

28877

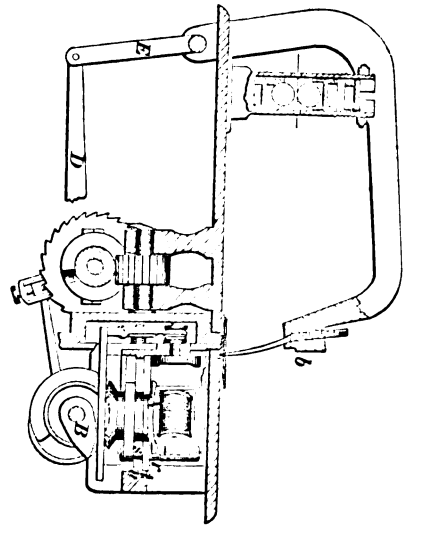

28878

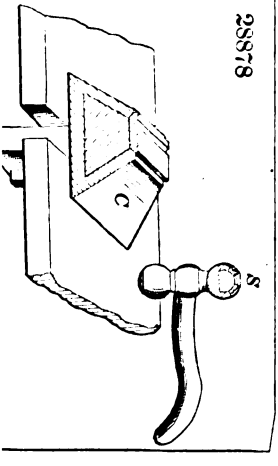

28824

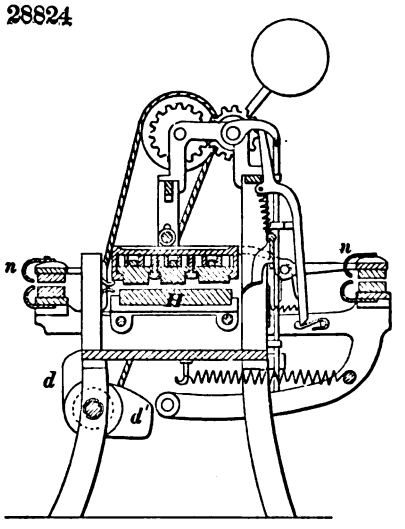

28825

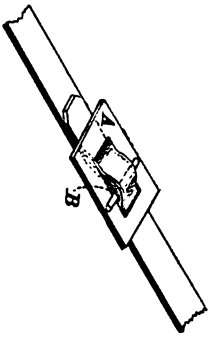

28826

28828

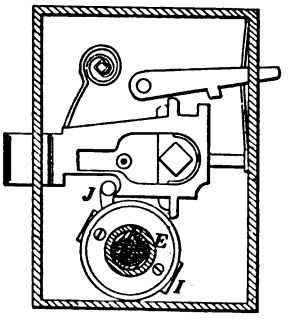

28827

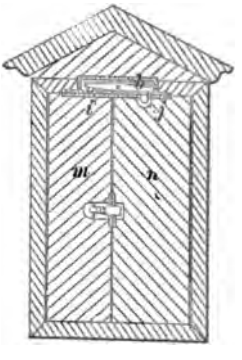

28829

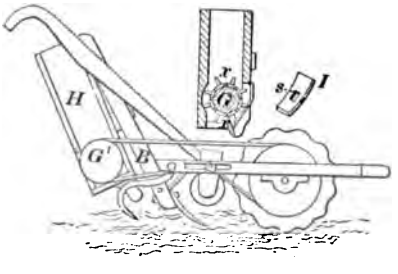

28830

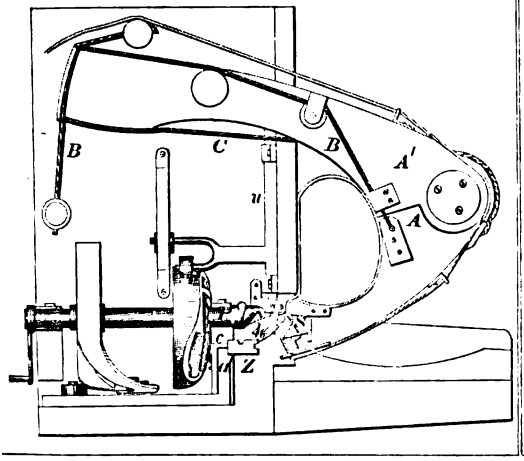

28834

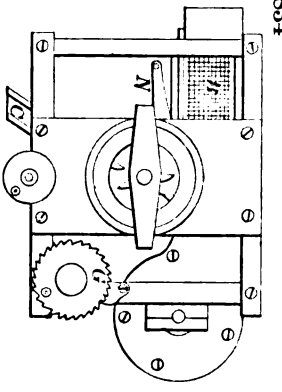

28831

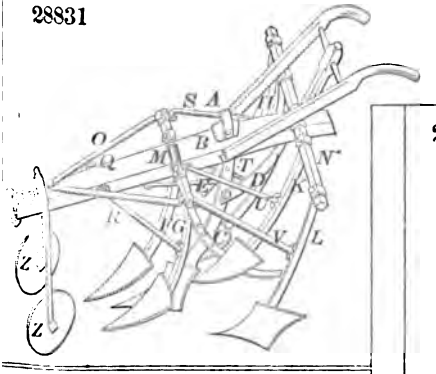

28833

Fig. 1

Fig. 2

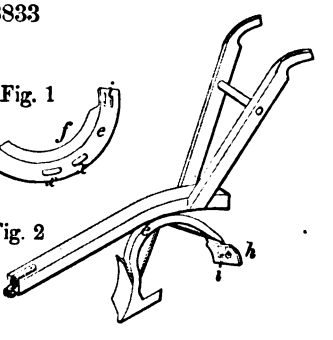

28832

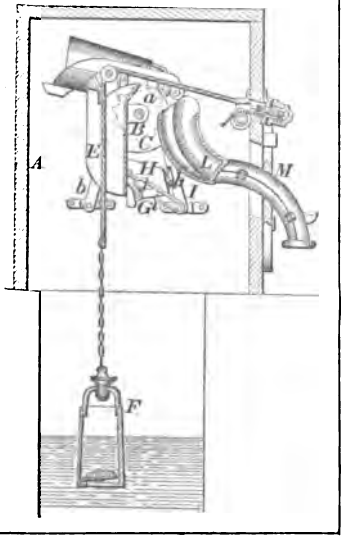

28835

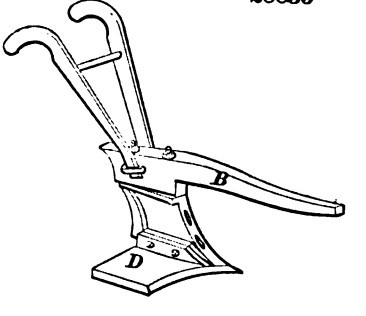

28836

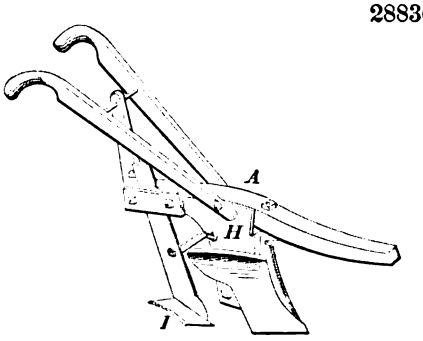

28838

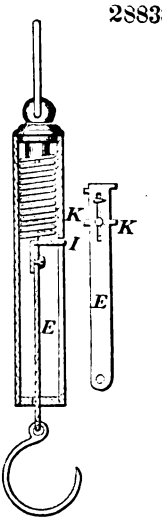

28837

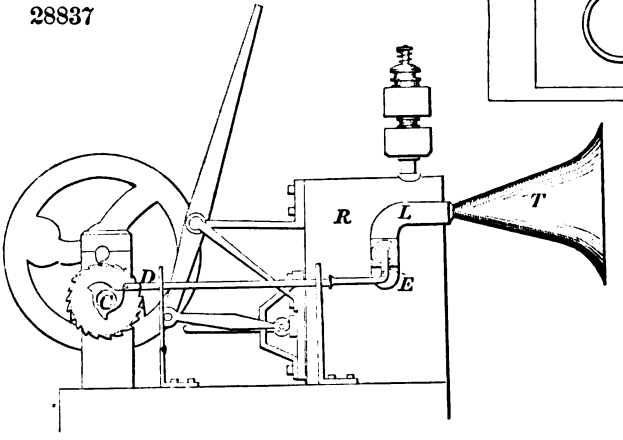

28839

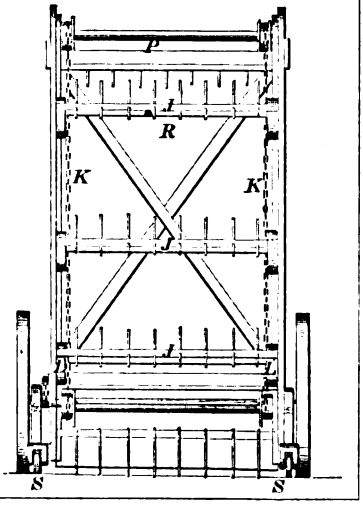

28840

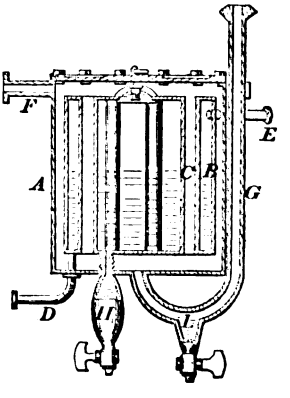

28841

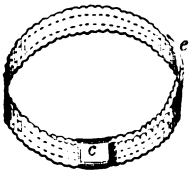

28842

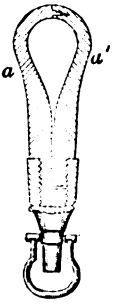

28843

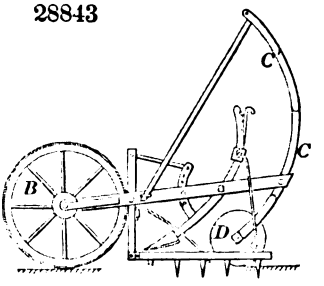

28844

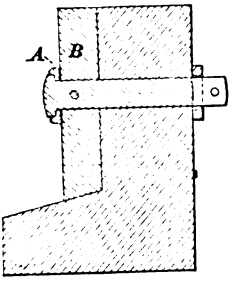

28845

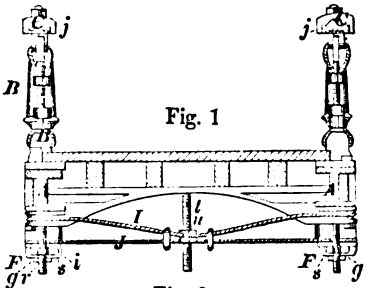

28846

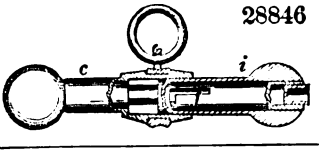

28847

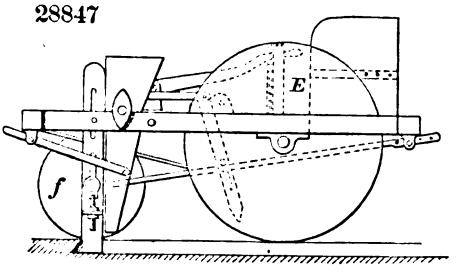

28848

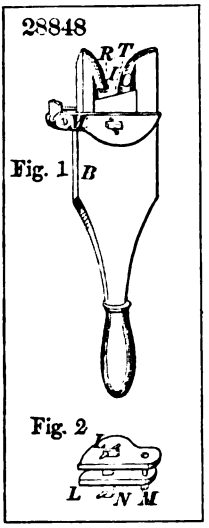

28849

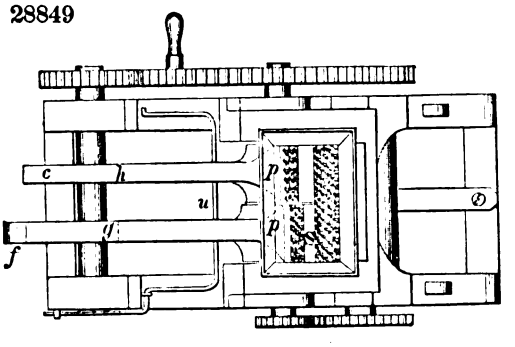

28850

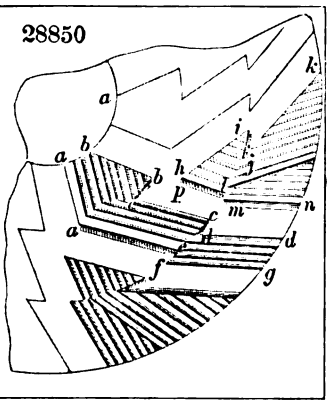

28851

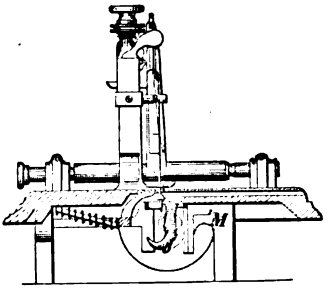

28852

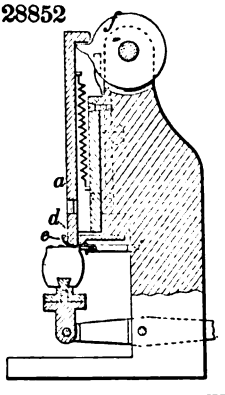

28853

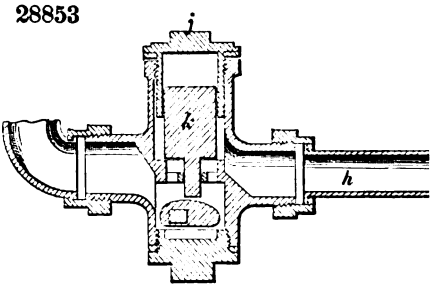

28855

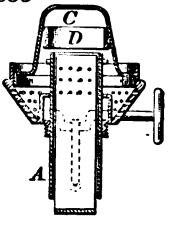

28856

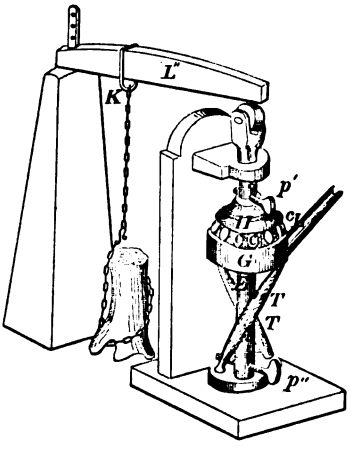

28854

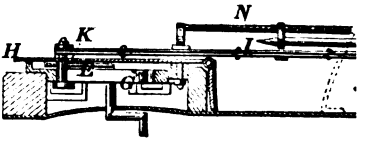

28857

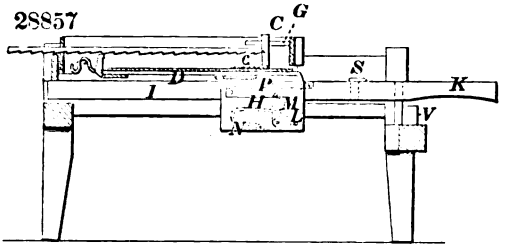

28858

28859

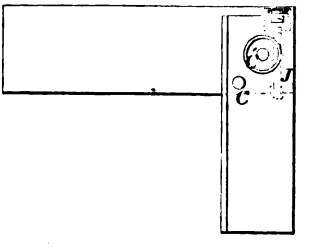

28860

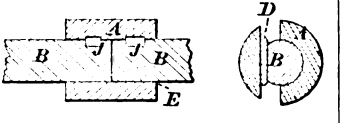

28861

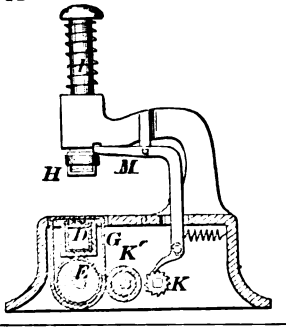

28862

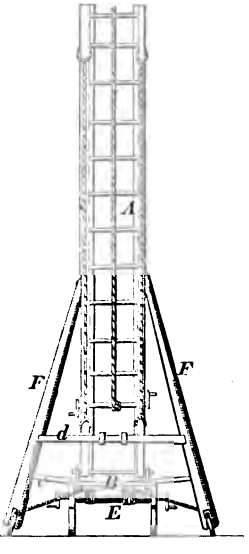

28863

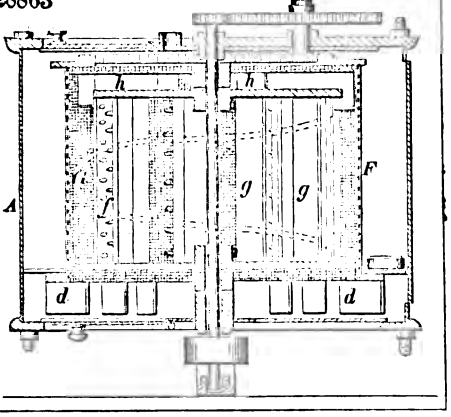

28864

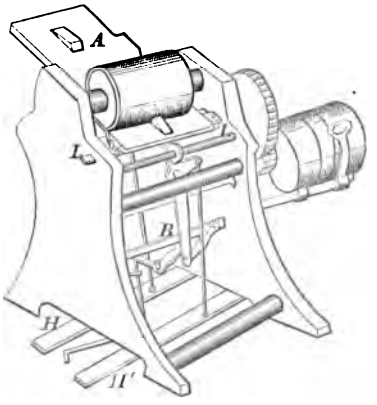

28866

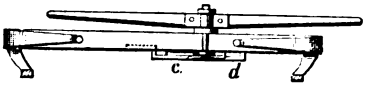

28868

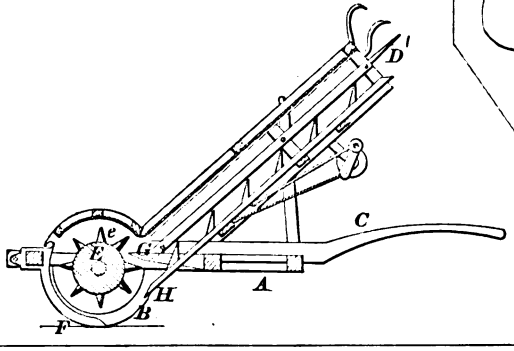

28869

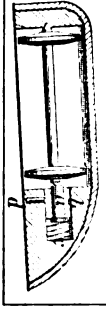

28870

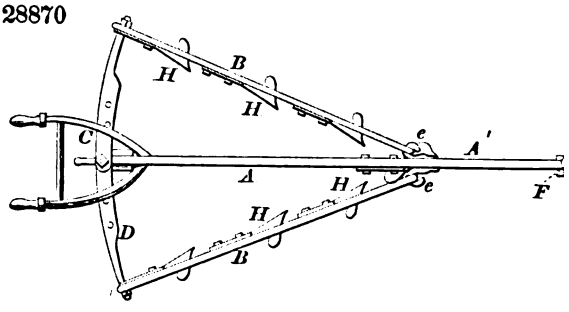

28865

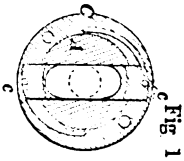

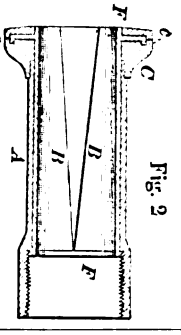

28867

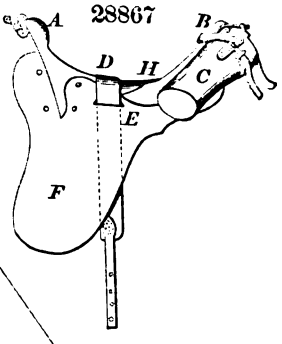

28871

Fig. 1.

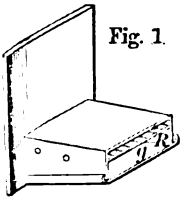

Fig. 2.

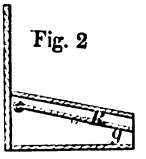

28872

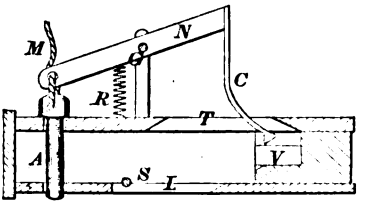

28873

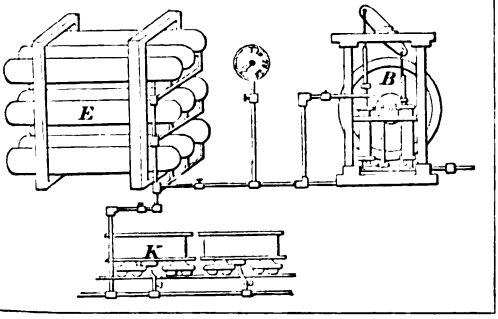

28874

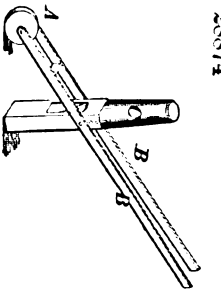

28876

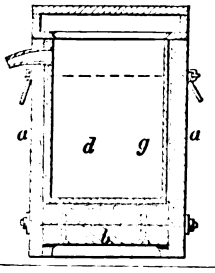

28877

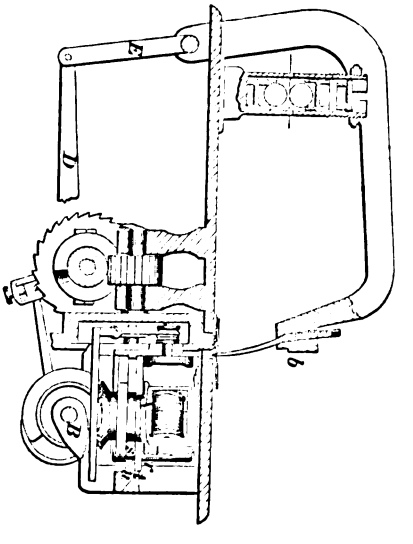

28878

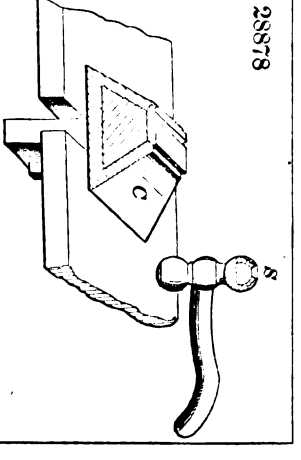

28879

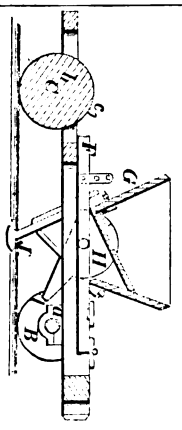

28880

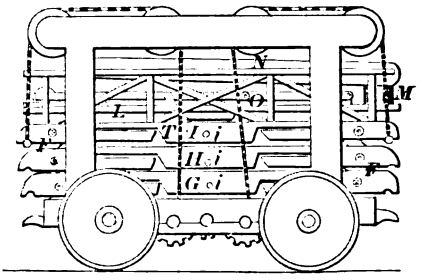

28881

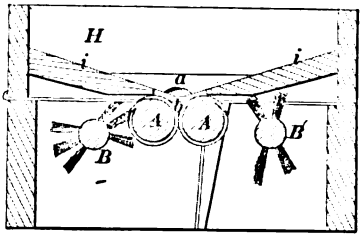

28883

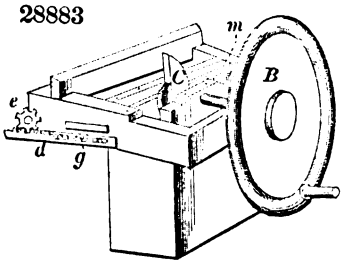

28884

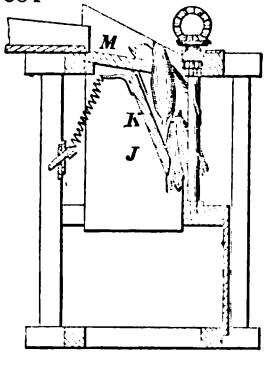

28885

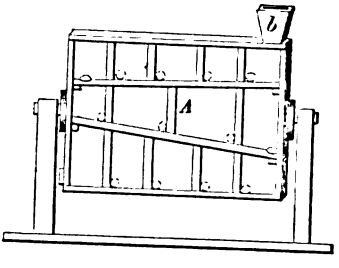

28886 Fig. 1

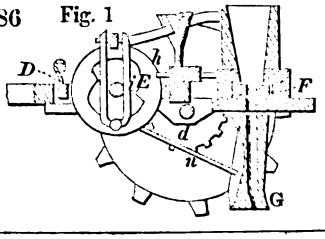

Fig. 2

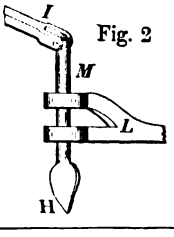

28888

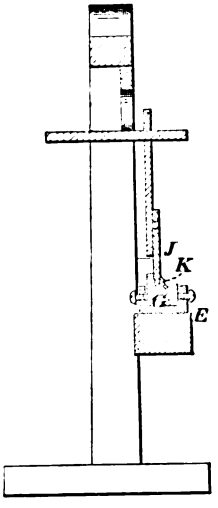

28887

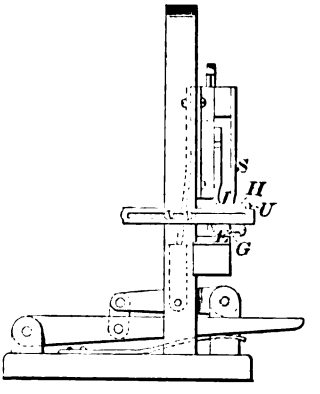

28889

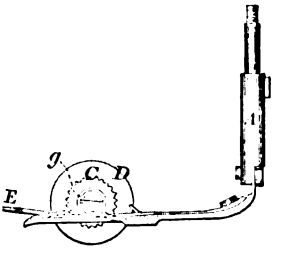

28890

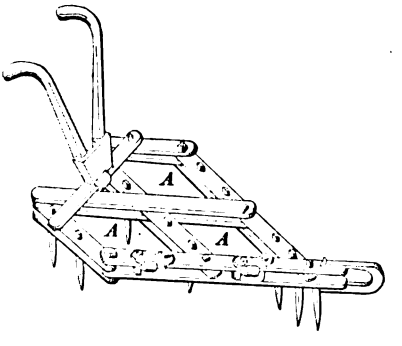

28891

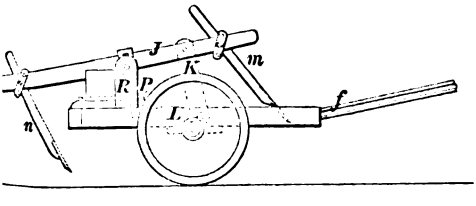

28892

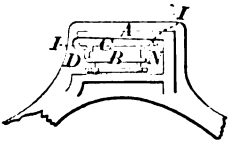

28893

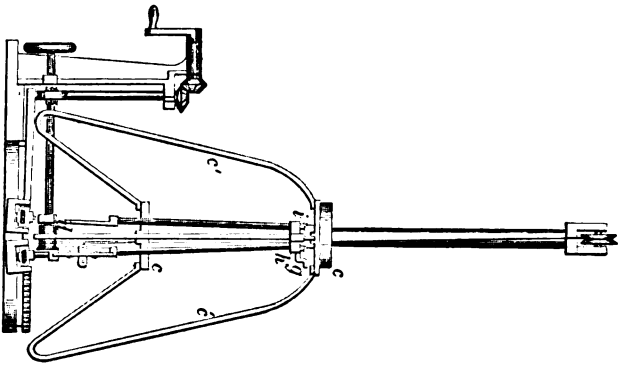

28894

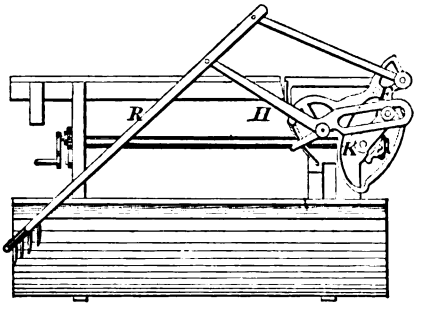

28896

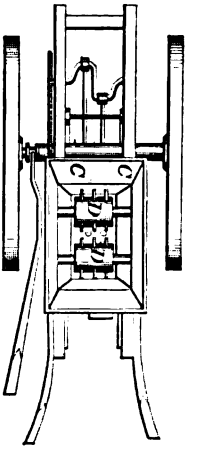

28895

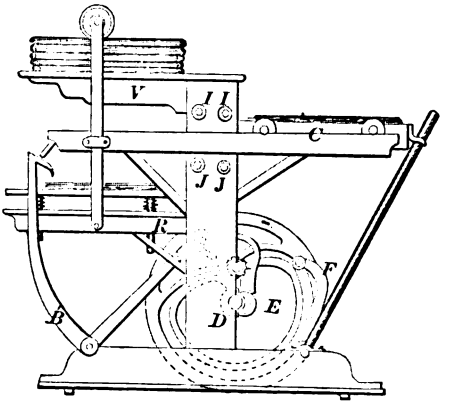

28897

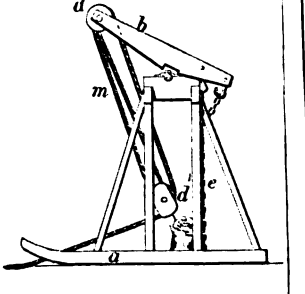

28898

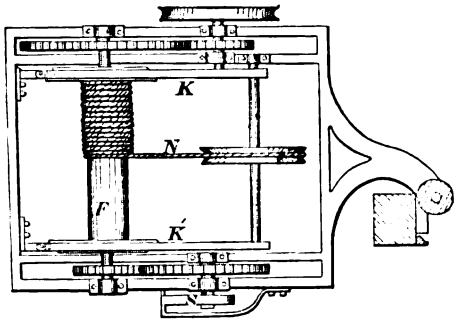

28902

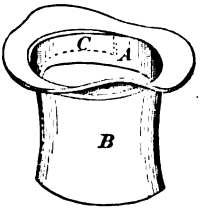

28899

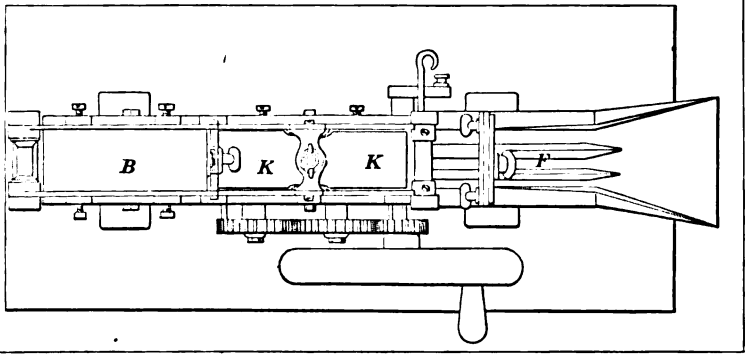

28900

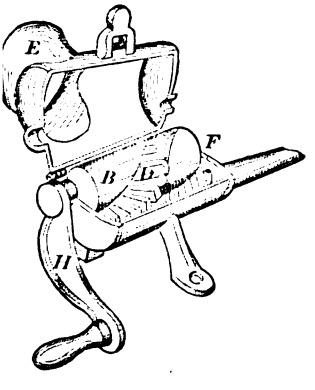

28901

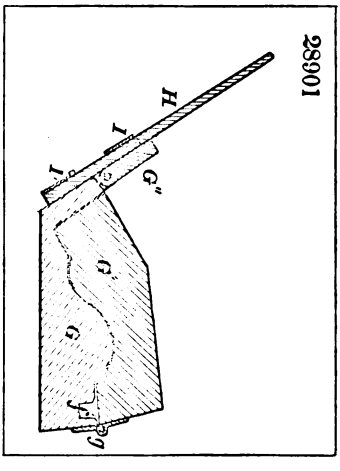

28903

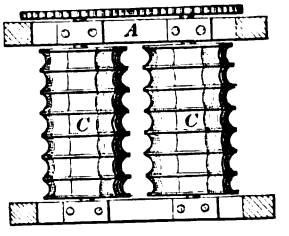

28905

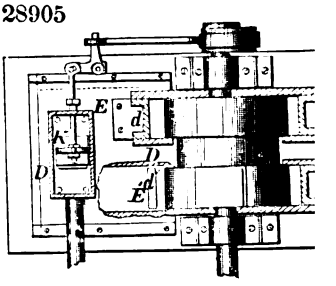

28907

Fig. 1

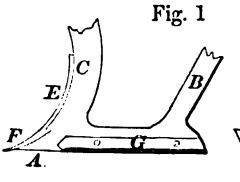

Fig. 2

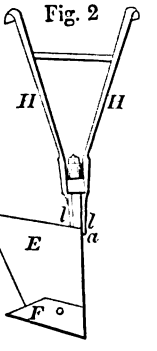

28906

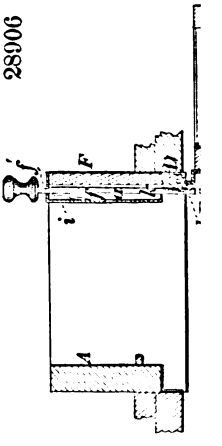

28908

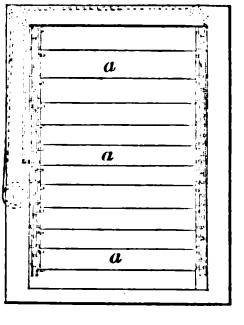

28909

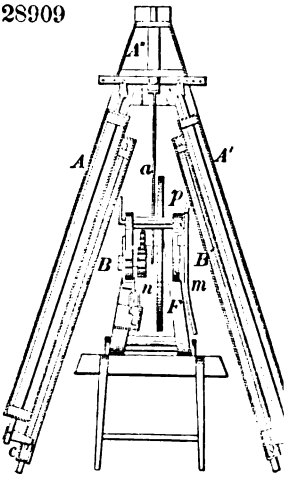

28910

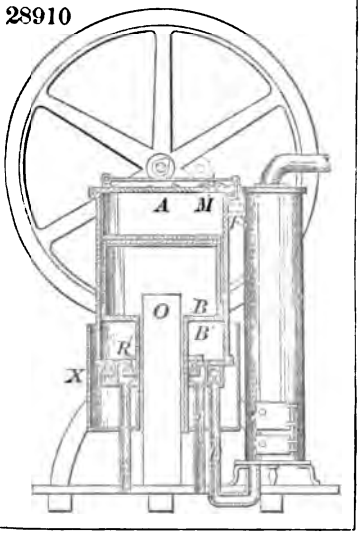

28911

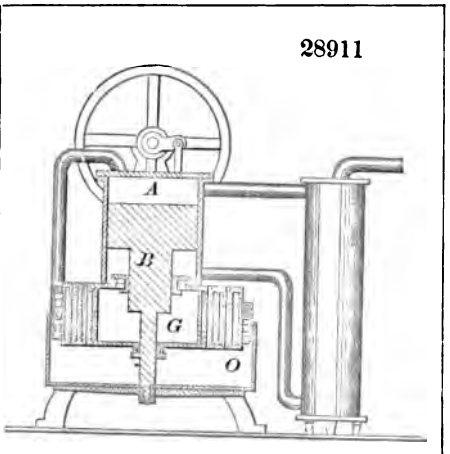

28913

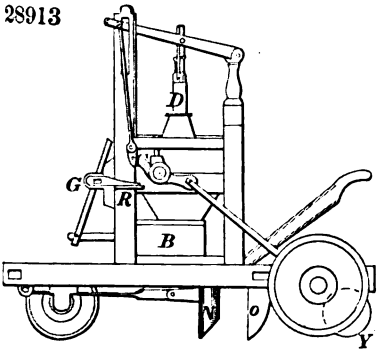

28912

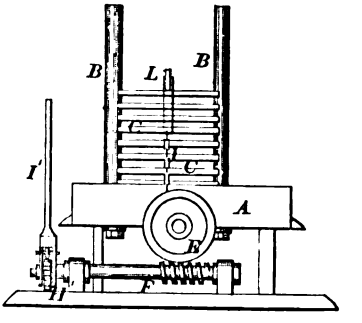

28914

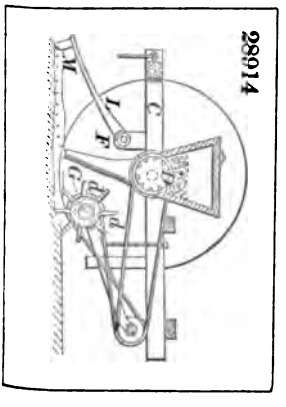

28915

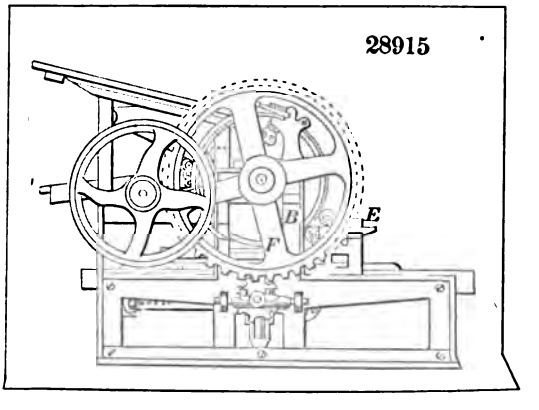

28916

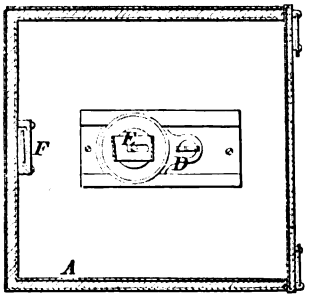

28917

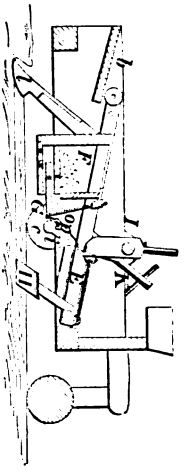

28918

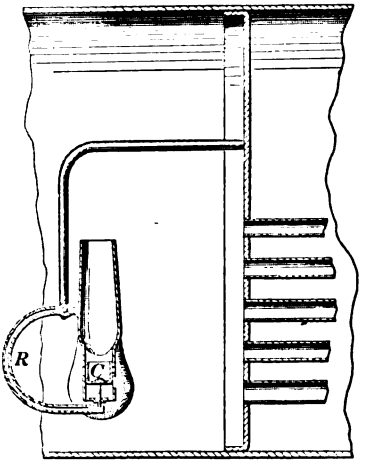

28919

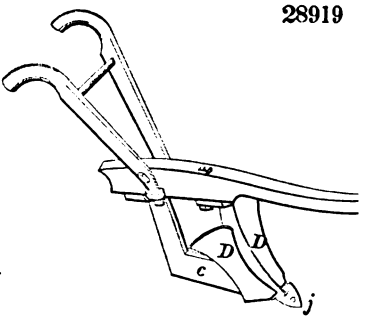

28920

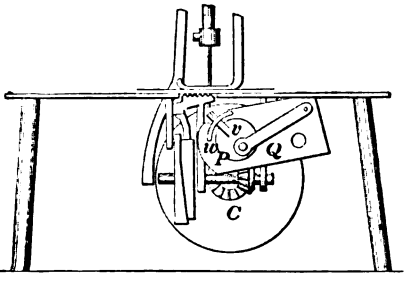

28921

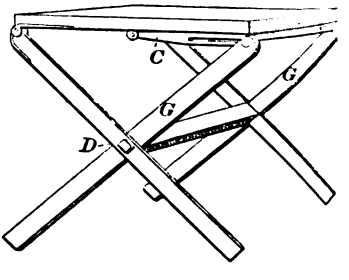

28922

28923

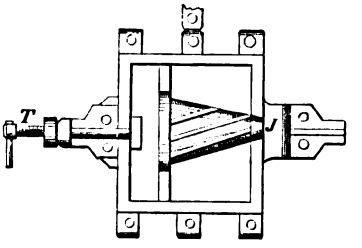

28924

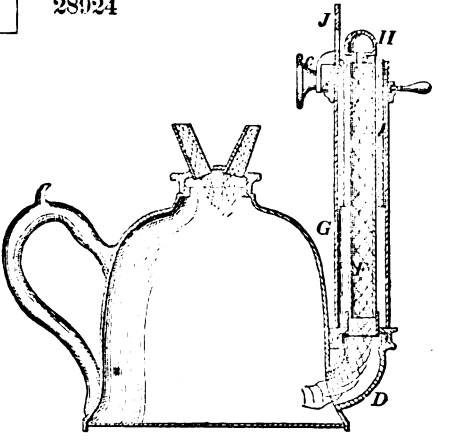

28926

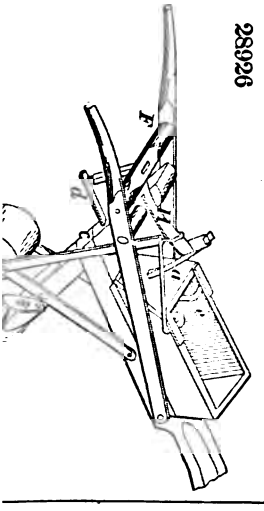

28925

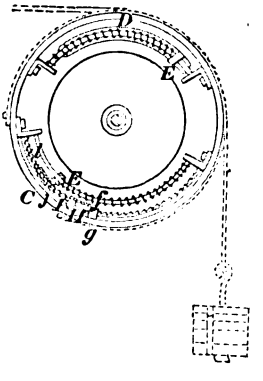

28927

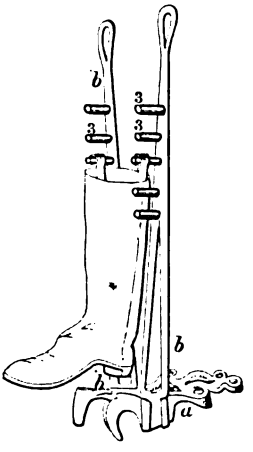

28928

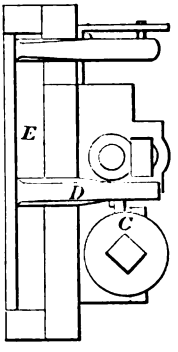

28929

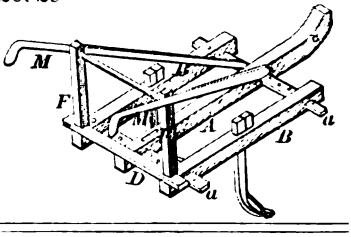

28930

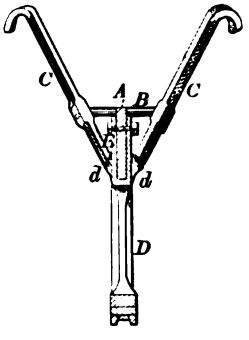

28931

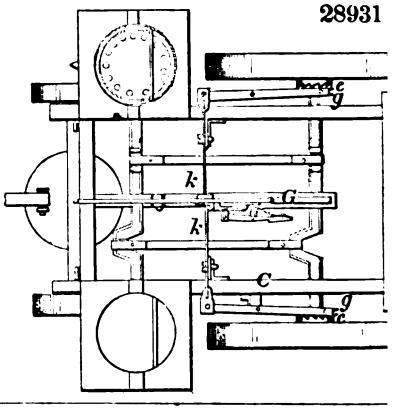

28932

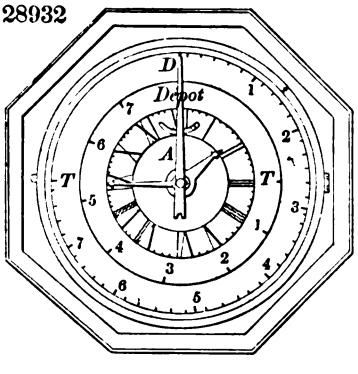

28933

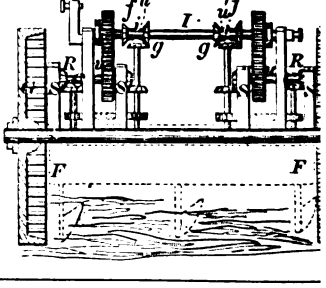

28934

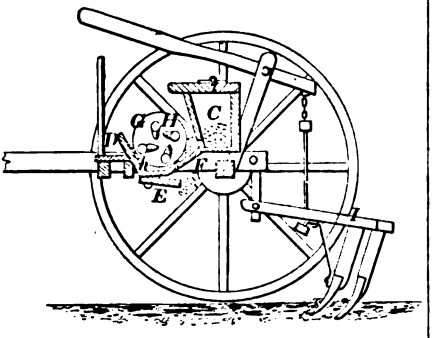

28935

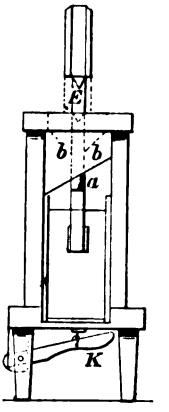

28936

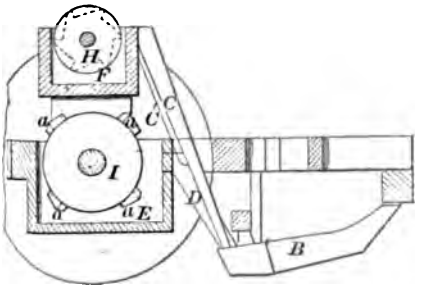

28938

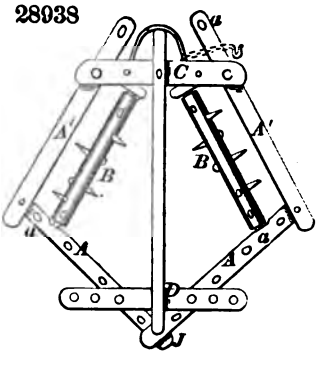

28939

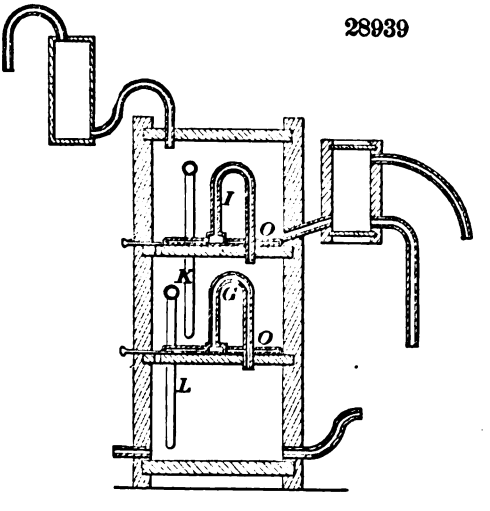

28937

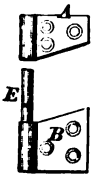

28940

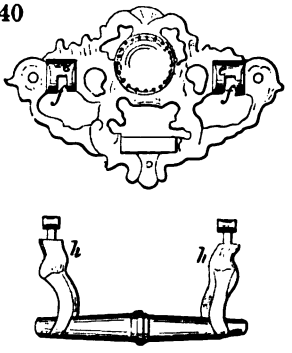

28941.

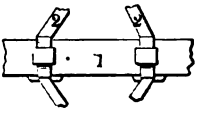

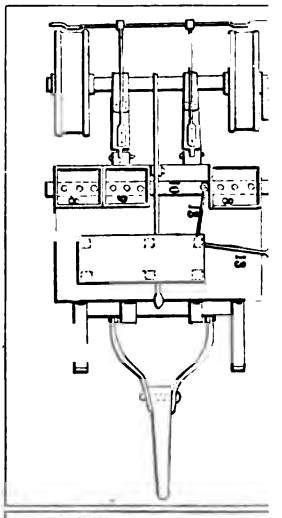

28942

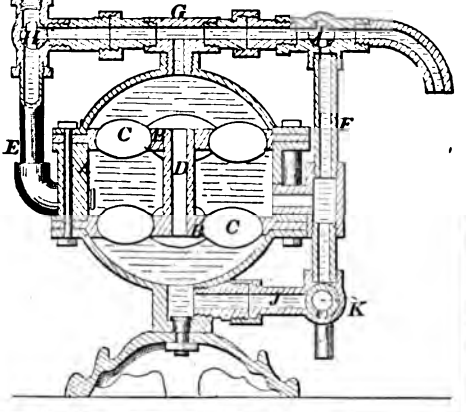

28944

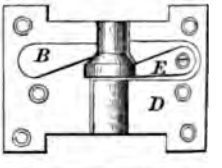

28945

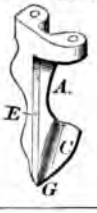

28946

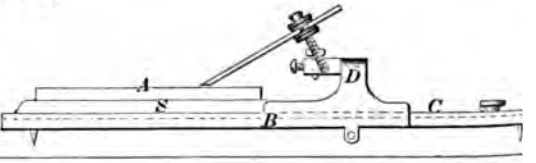

28947

28948

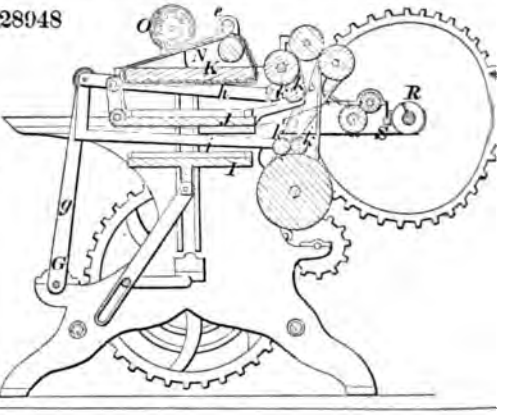

'8949

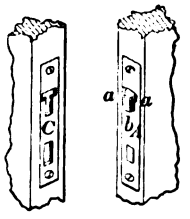

28950 Fig 1

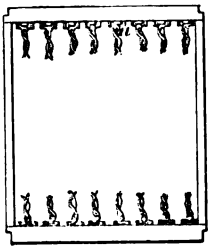

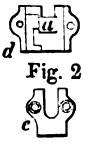

28951

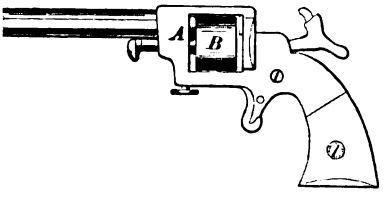

28952

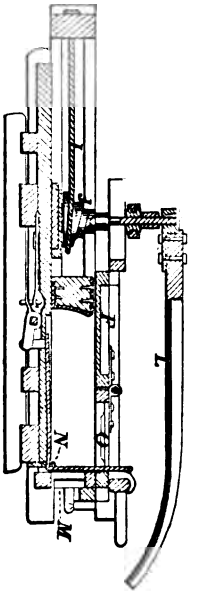

954

28955

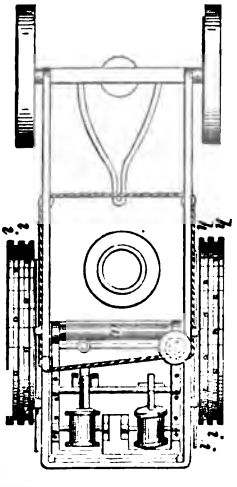

28957

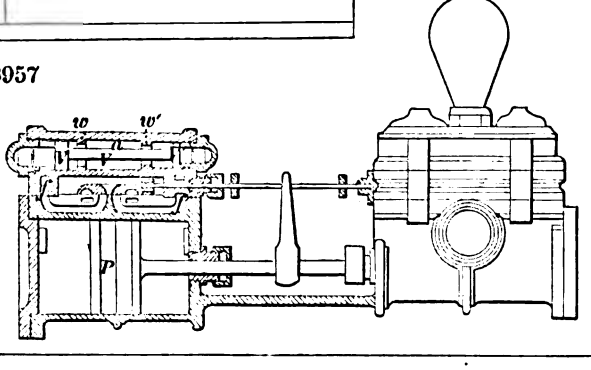

28958

28959

Fig. 1

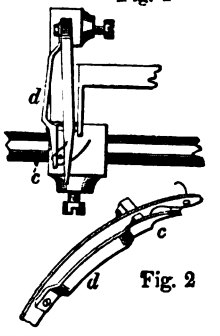

Fig. 2

28960

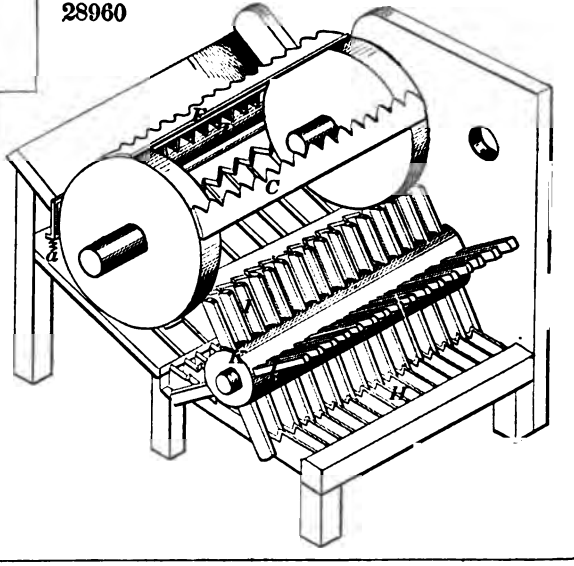

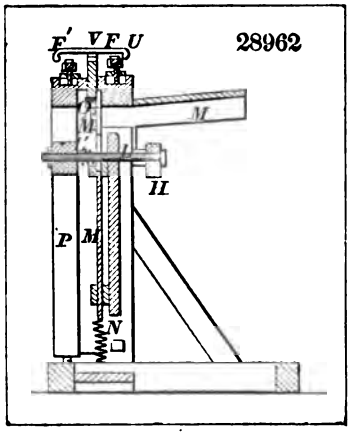

28962

28961

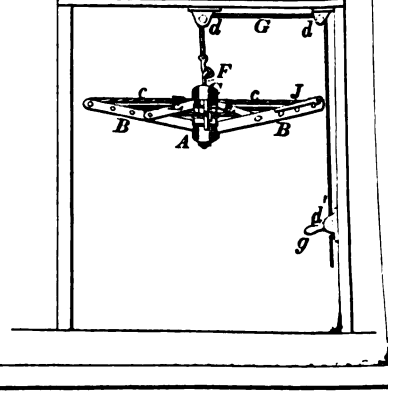

963

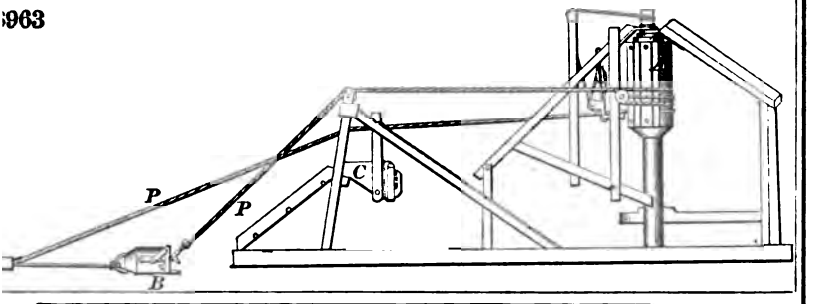

28964

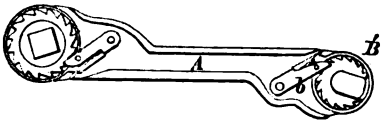

28965

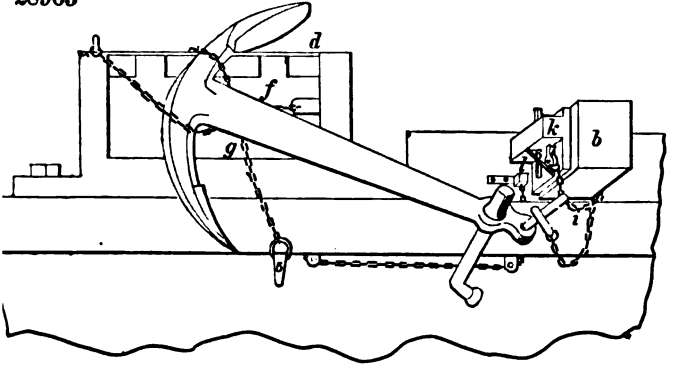

966

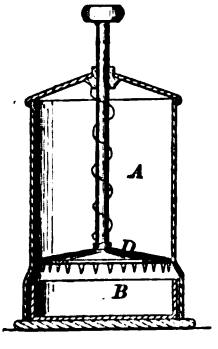

28967

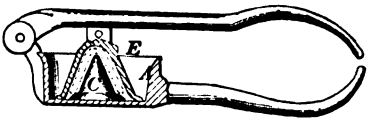

28968

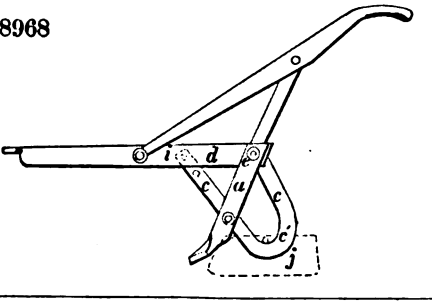

28969

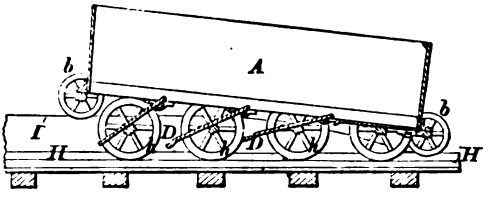

28970

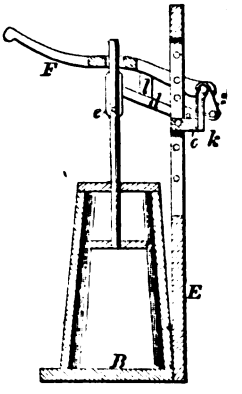

28971

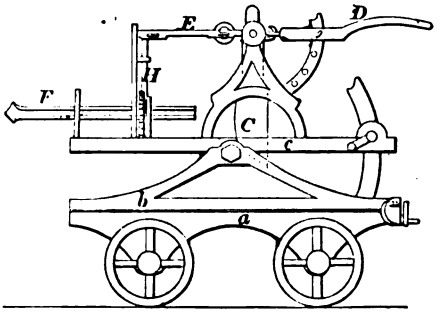

28972

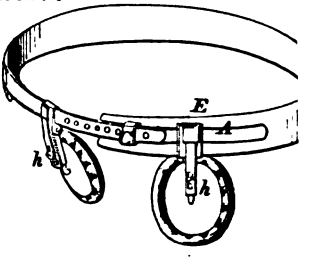

28973

28974

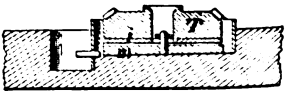

28975

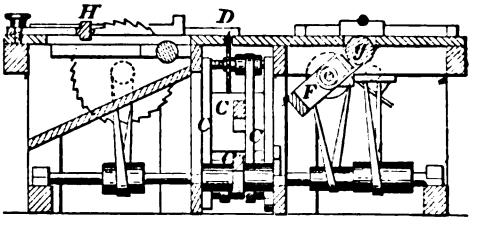

28976

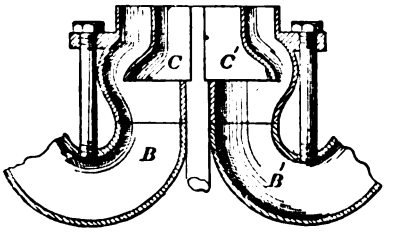

28977

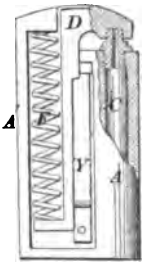

28978

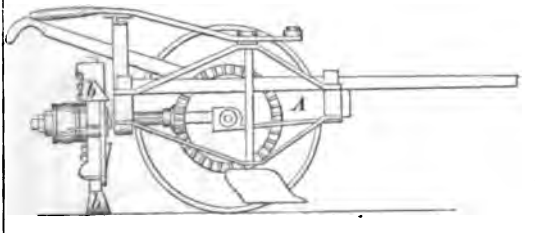

28979

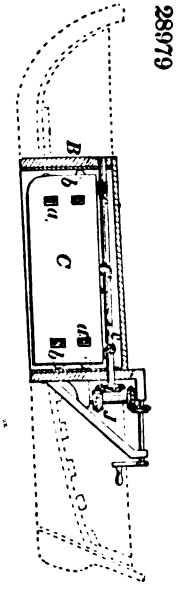

28980

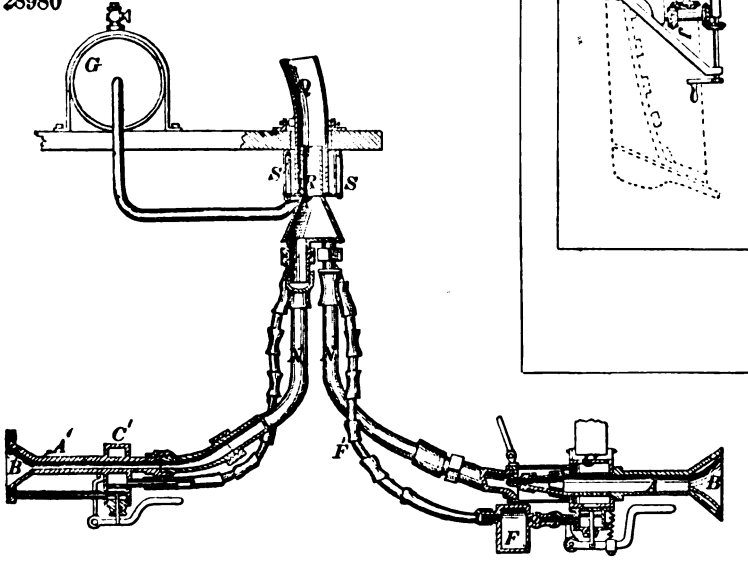

28981

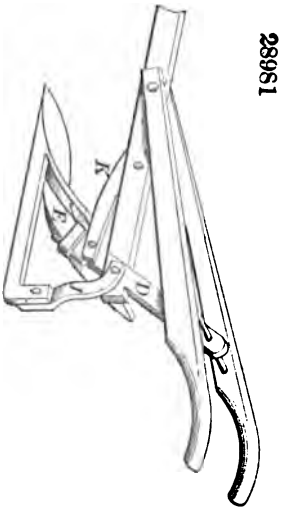

28982

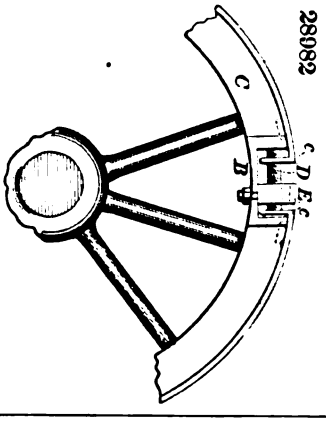

28983

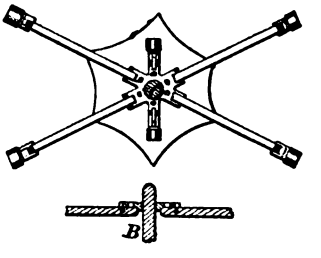

28984

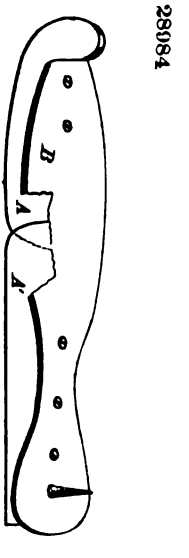

28985

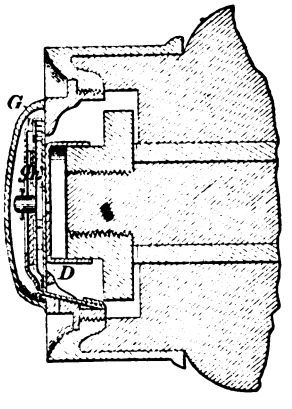

28986

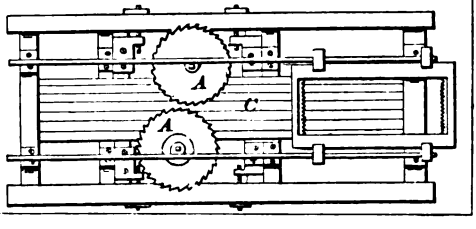

28987

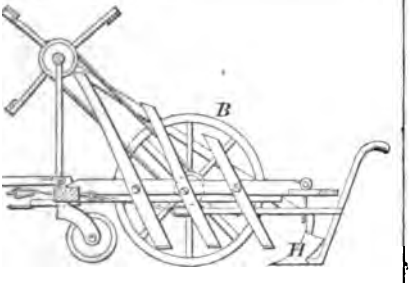

28988

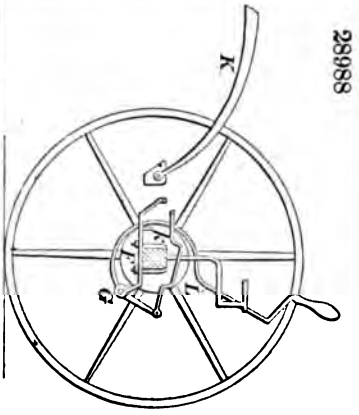

28989

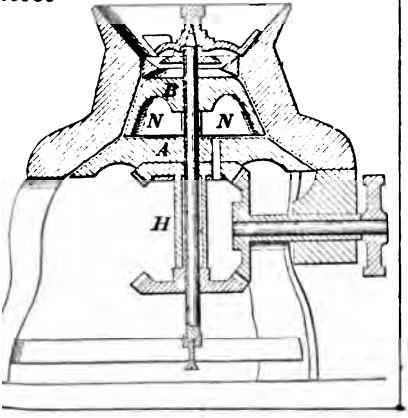

28990

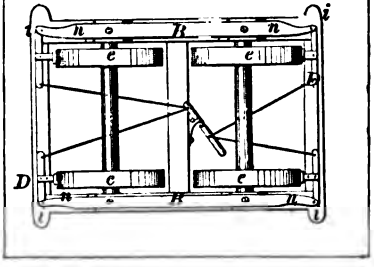

28991

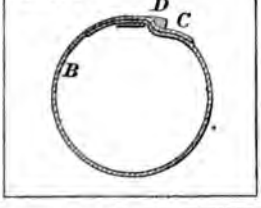

28992

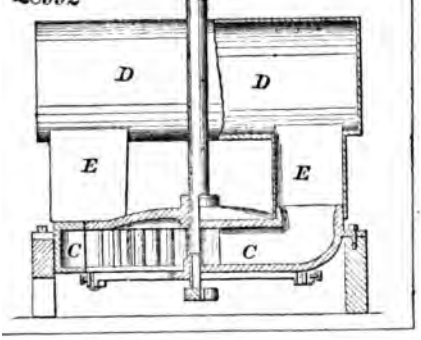

28993

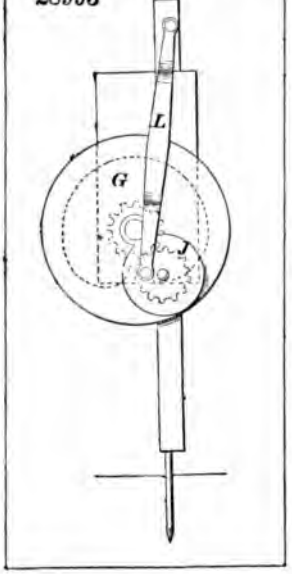

28994

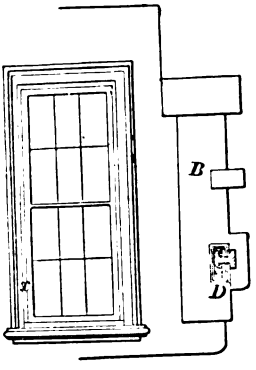

28996

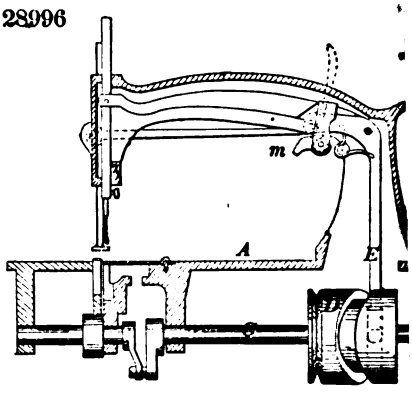

28995

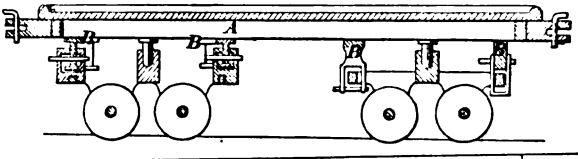

28997

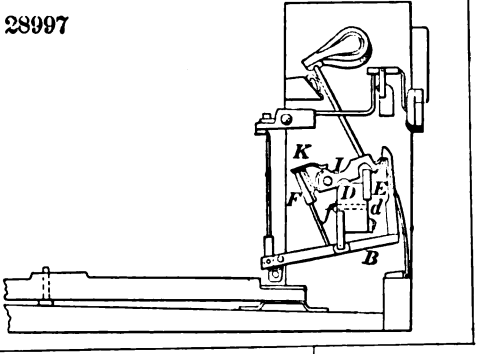

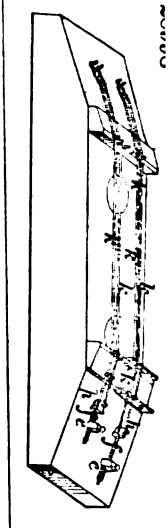

29000

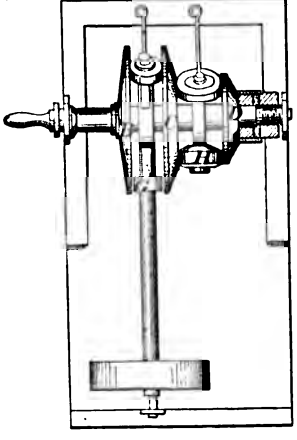

28999

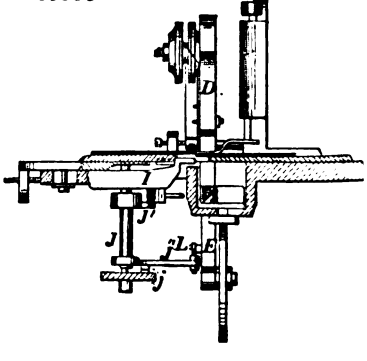

29001

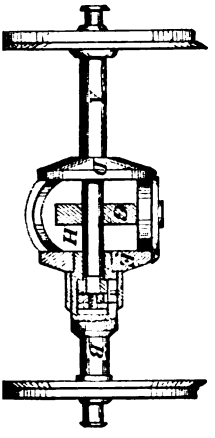

29002

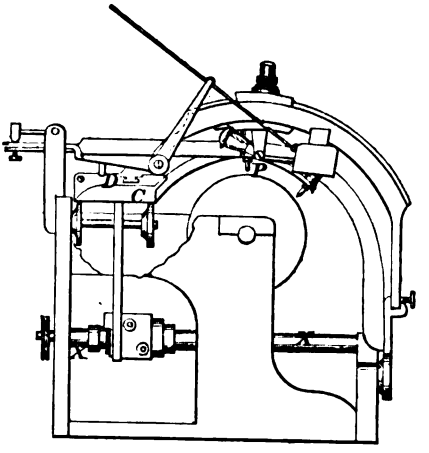

29003

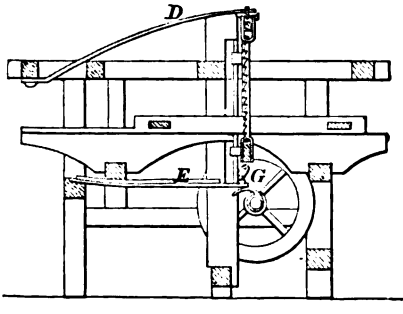

29004

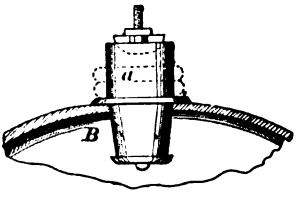

29006

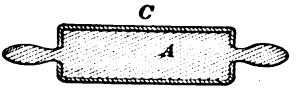

29007

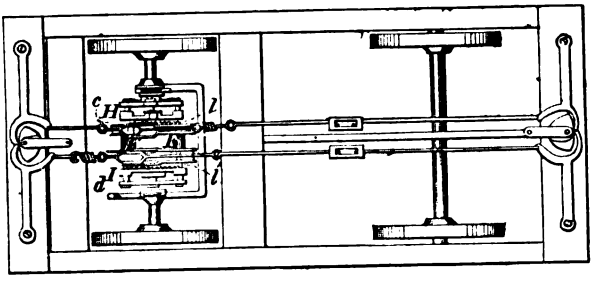

29009

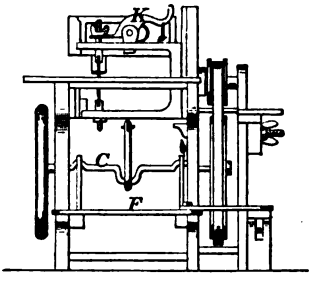

29008

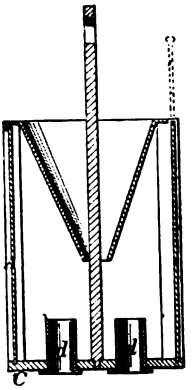

29010

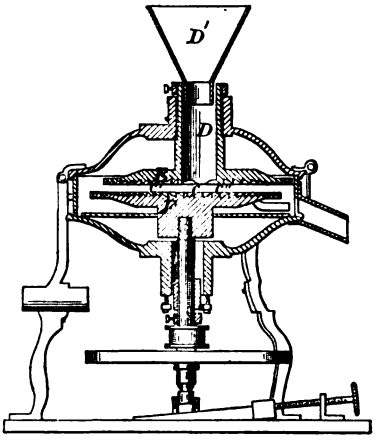

29011

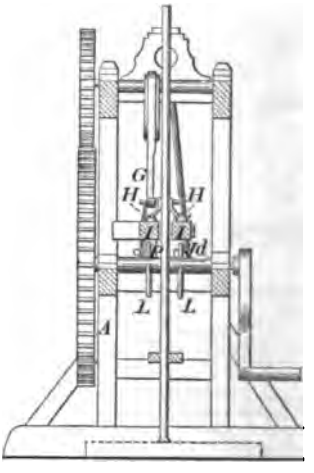

29012

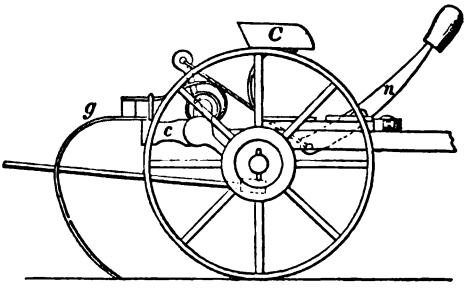

29013

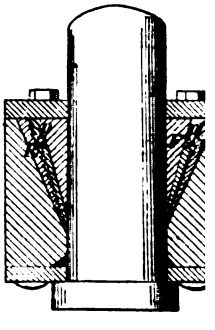

29014

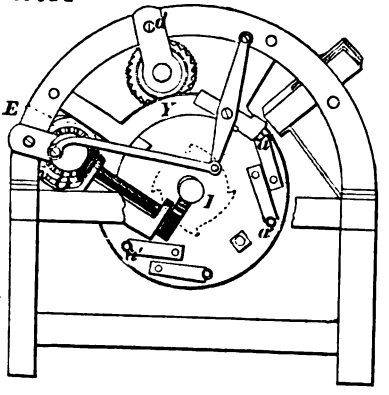

29015

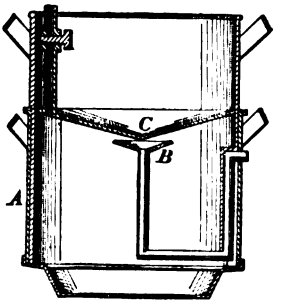

29016

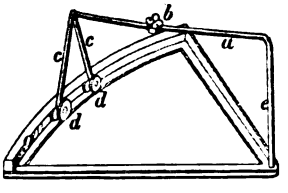

29017

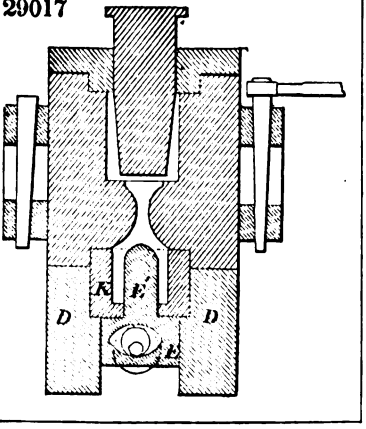

29018

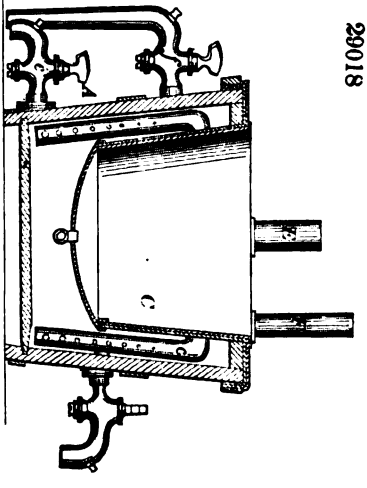

29019

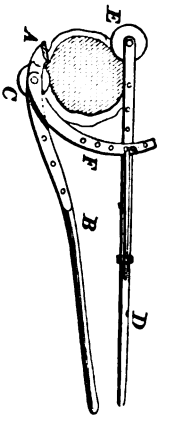

29021

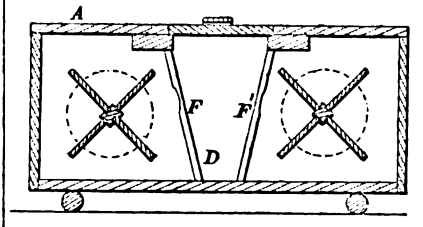

29022

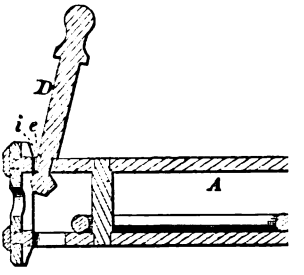

29023

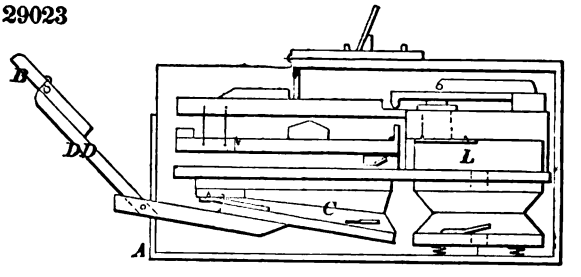

29025

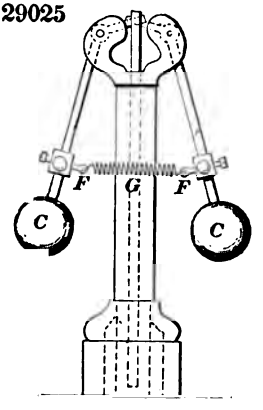

29024

Fig. 1

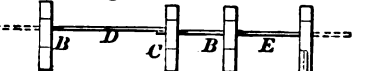

Fig. 2

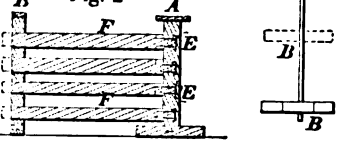

29026

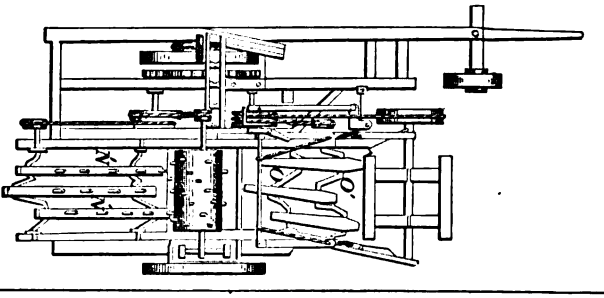

29027

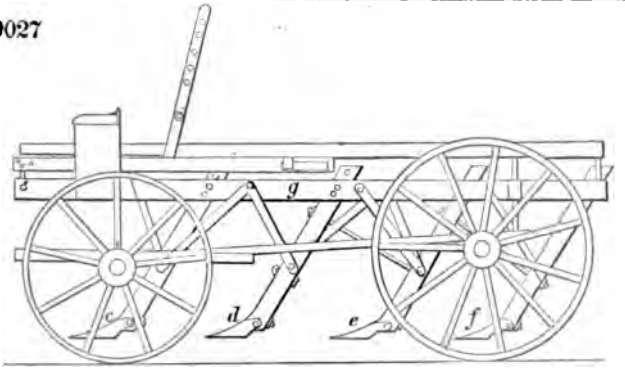

29028

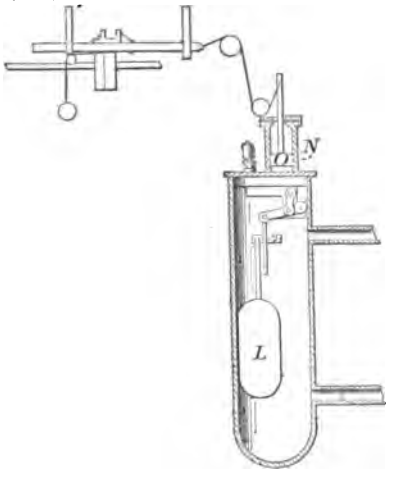

29029

Fig. 1

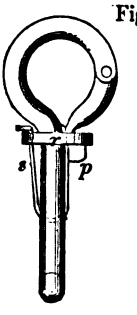

Fig. 2

29030

Fig. 1

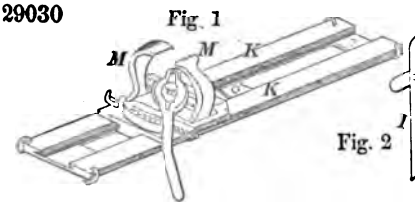

Fig. 2

29031

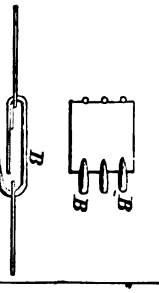

29032

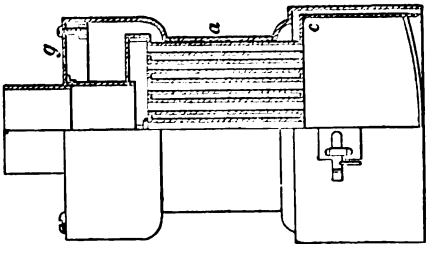

29033

Fig. 1

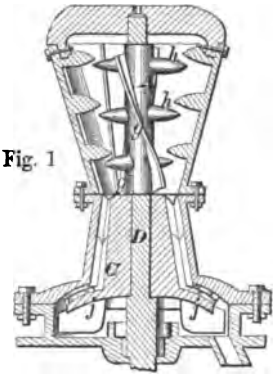

Fig. 2

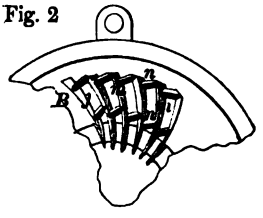

29034

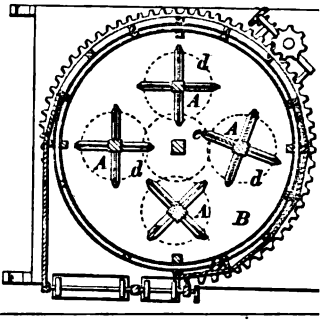

29035

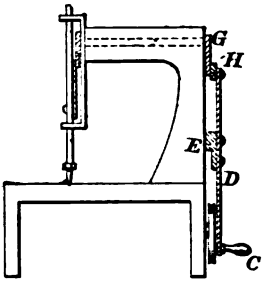

29036

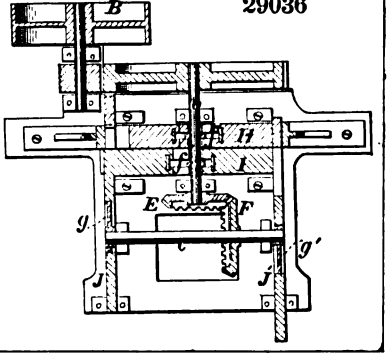

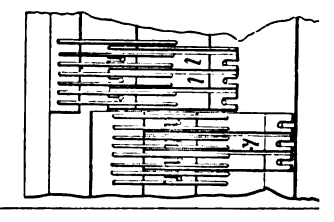

29038

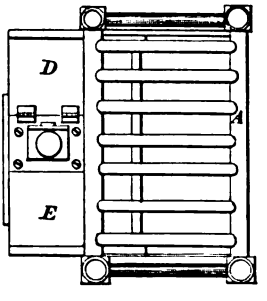

29039

29040

29041

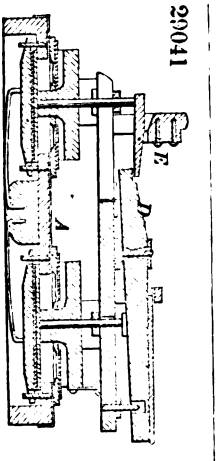

29042

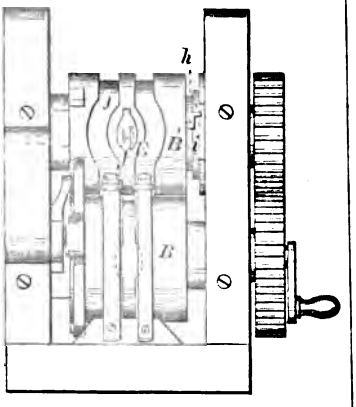

29043

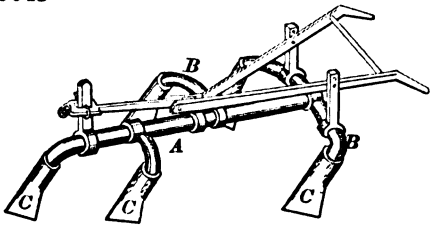

29045

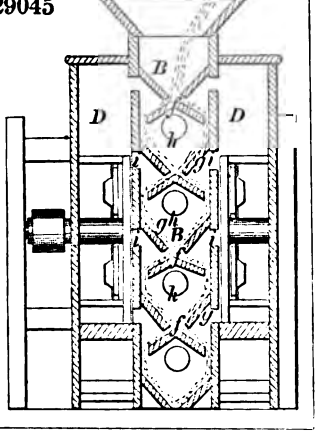

29044

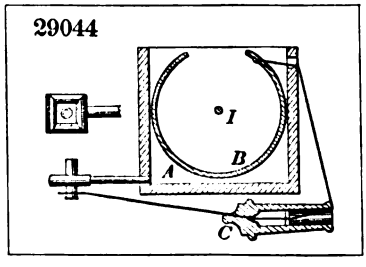

29046

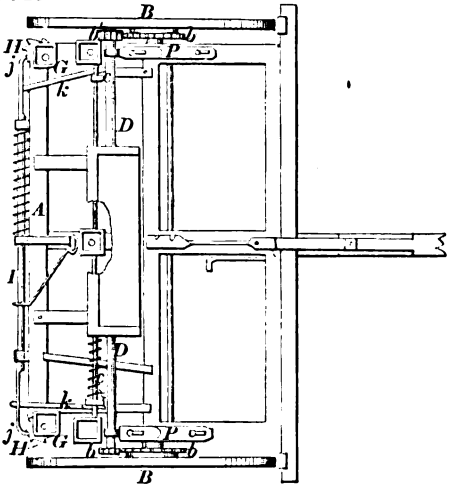

29048

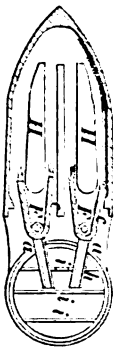

29049

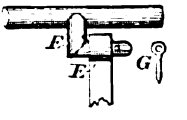

29047

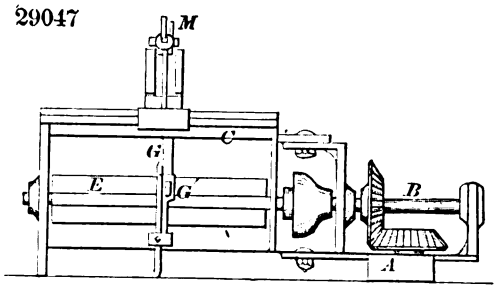

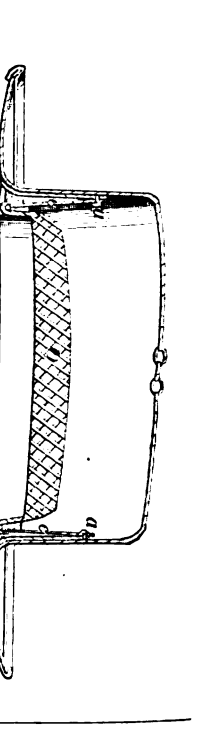

29051

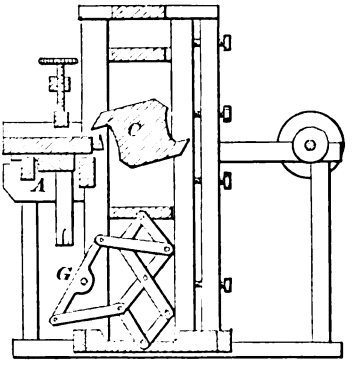

052

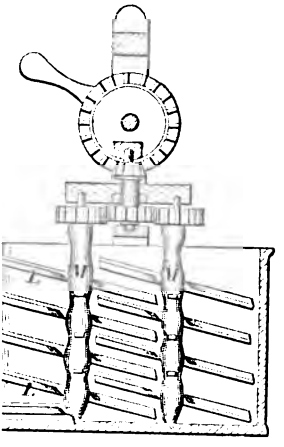

29053

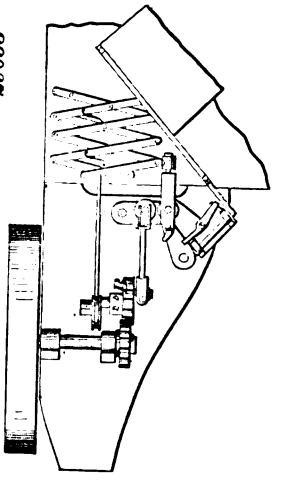

9054

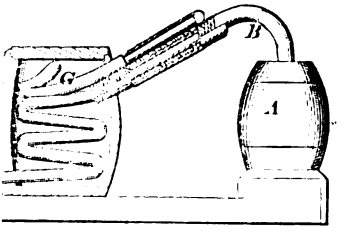

29055

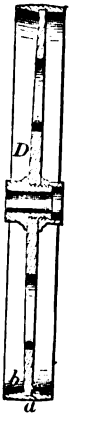

56

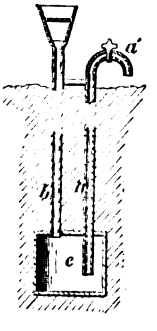

29057

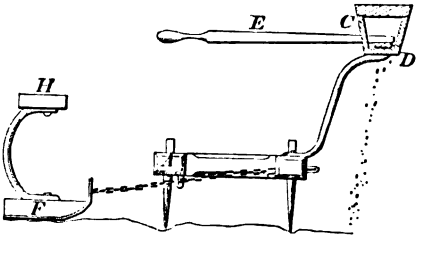

29058

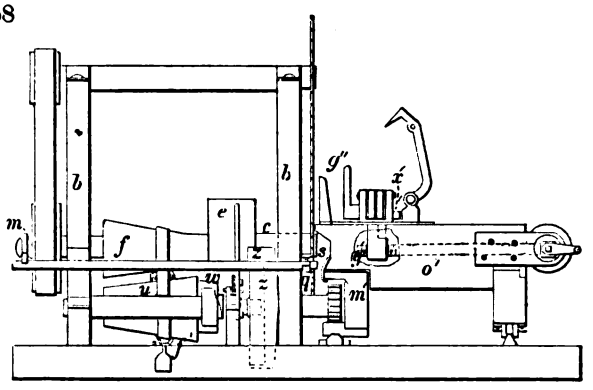

29060

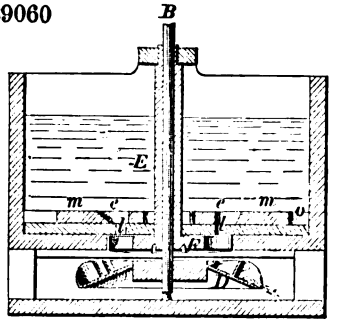

29062

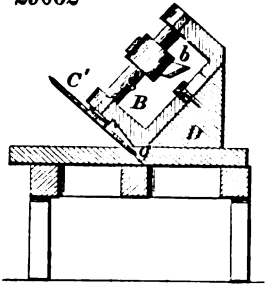

29061

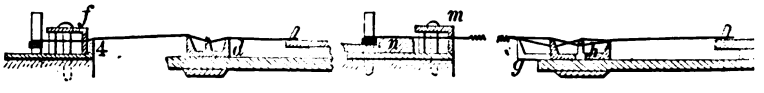

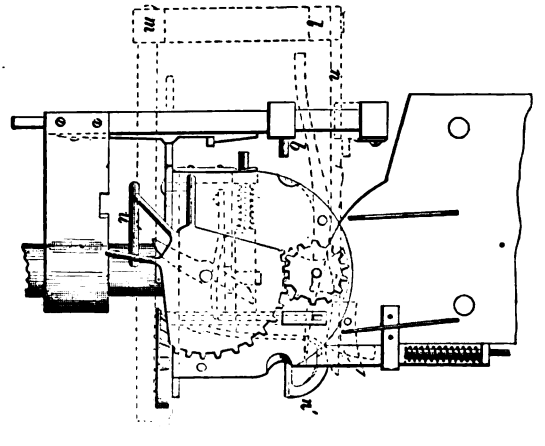

64

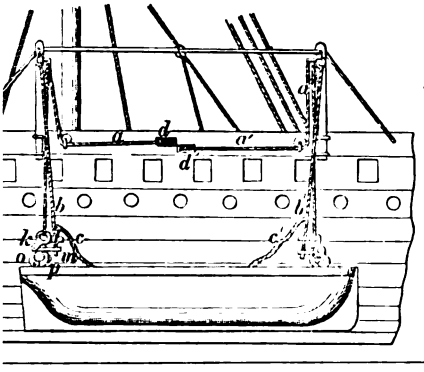

29067

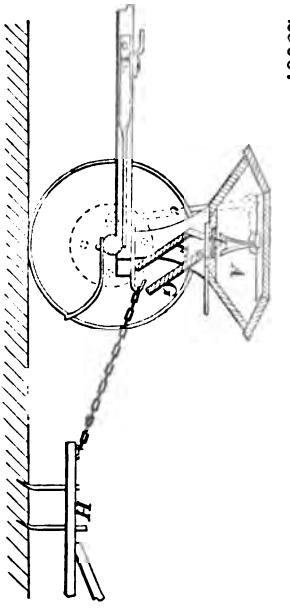

0065

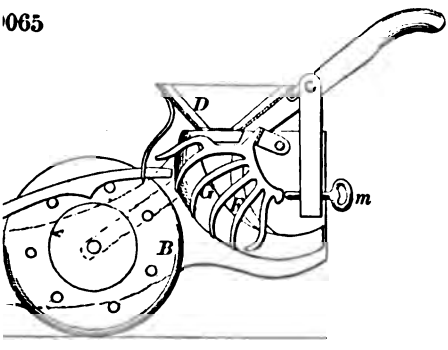

29066

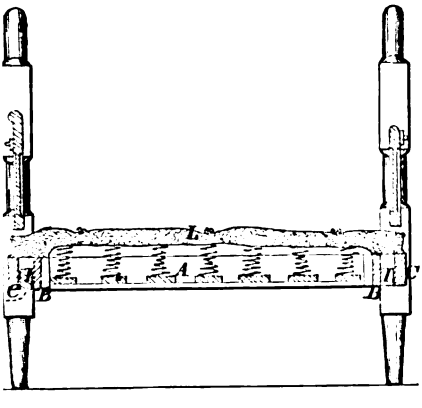

29068

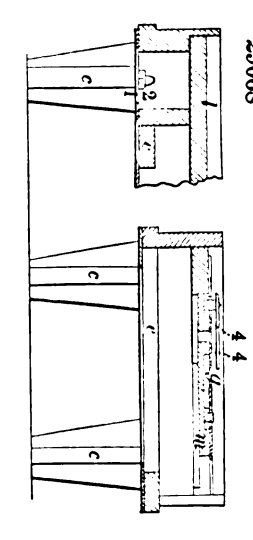

29069

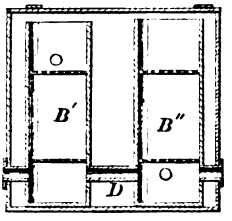

29070

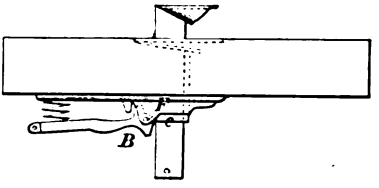

29071

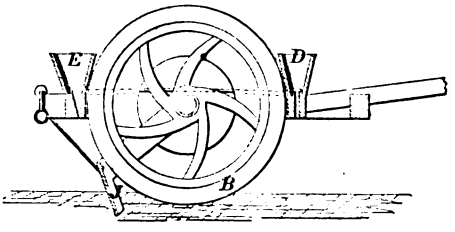

29072

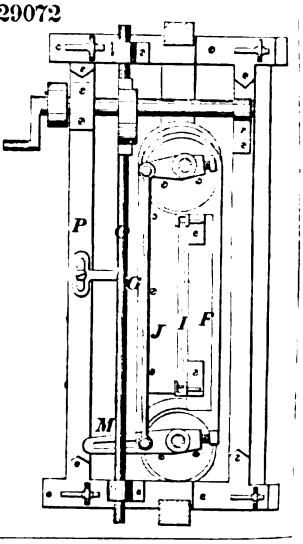

29073

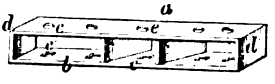

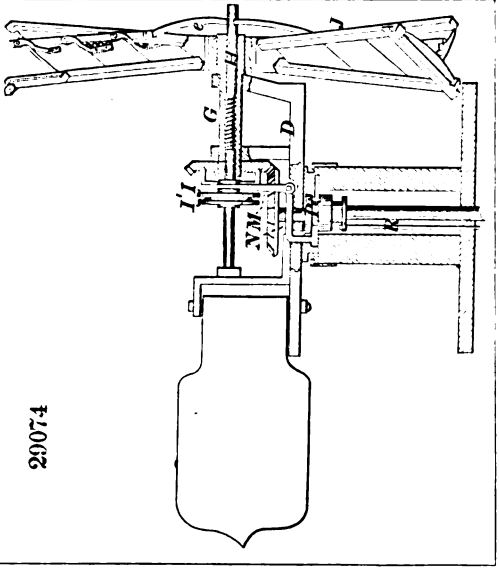

29074

29075

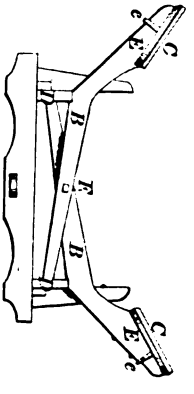

)076

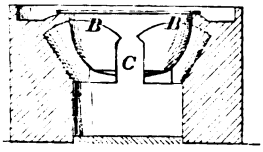

29077

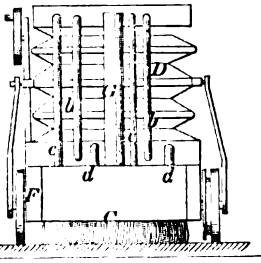

)078

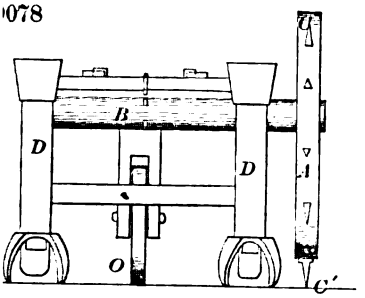

29079

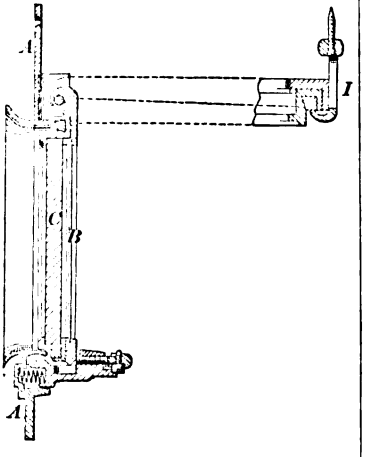

)80

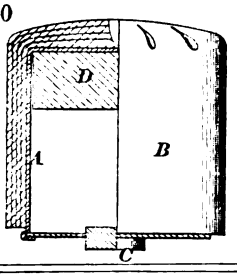

29081

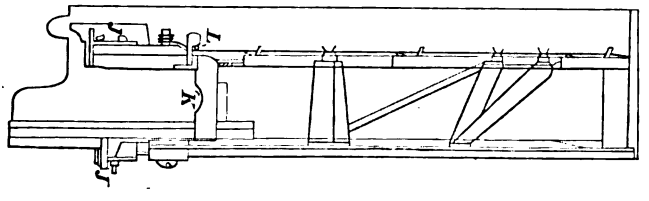

)83

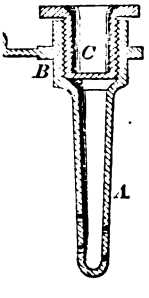

29082

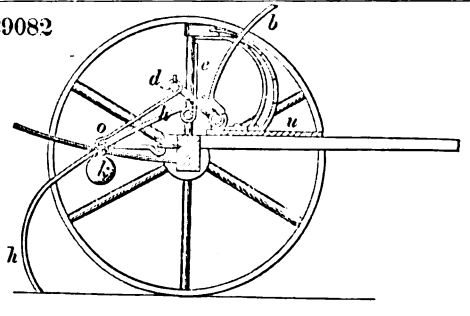

29084

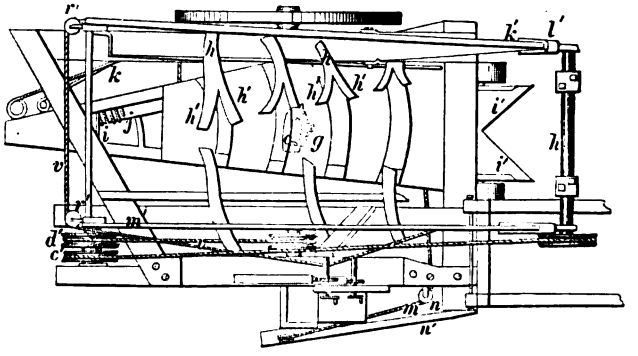

29085

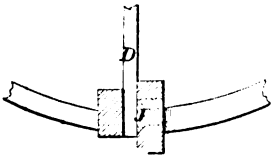

29086

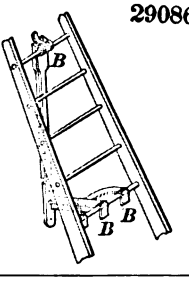

29087

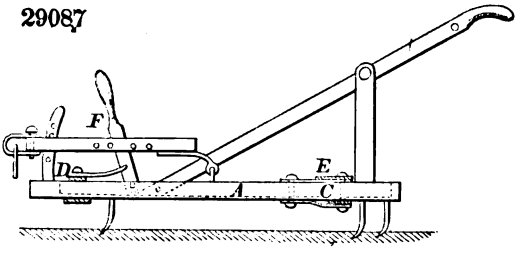

29088

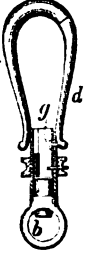

29089

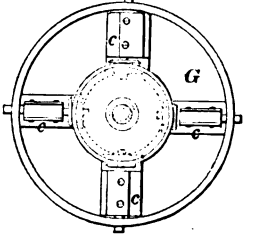

29090

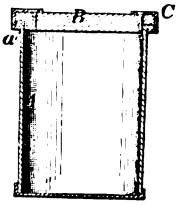

29092

29093

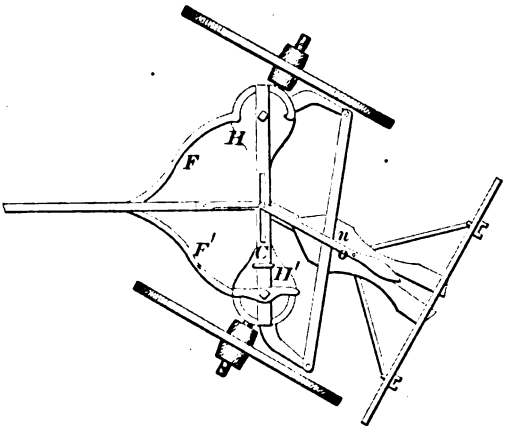

29094

Fig. 2

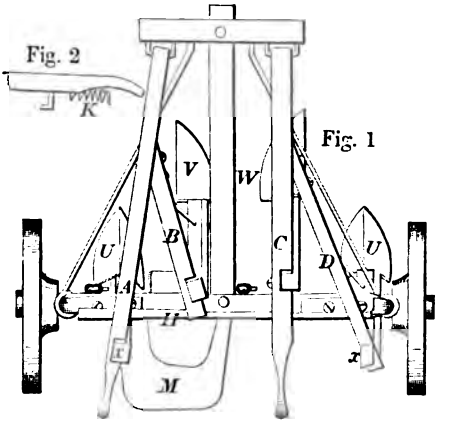

Fig. 1

29095

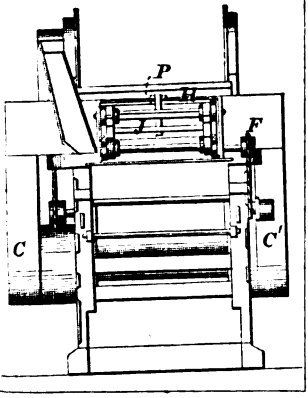

29096

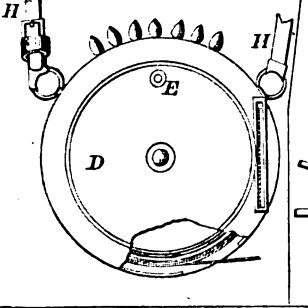

29097

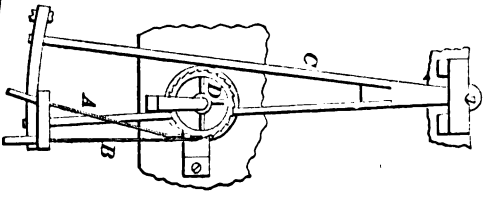

29098

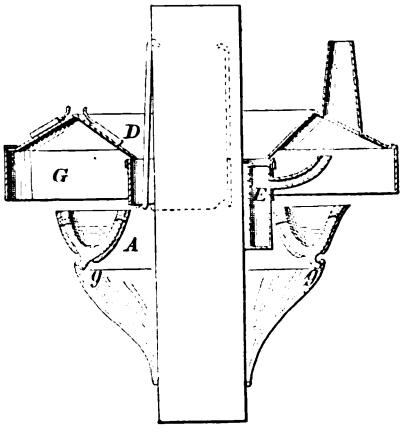

29099

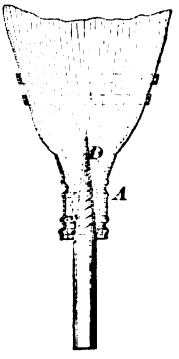

29100

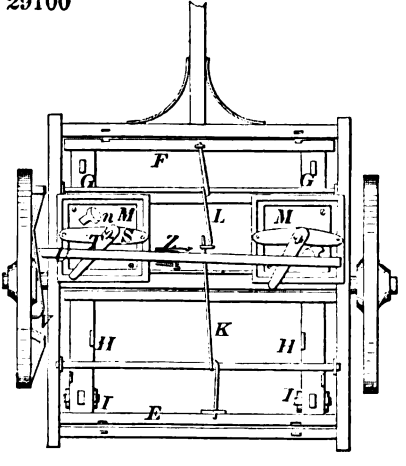

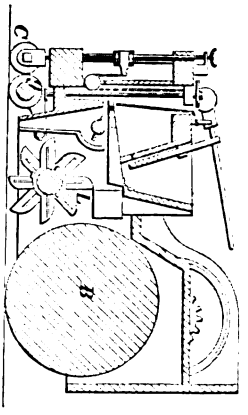

29101

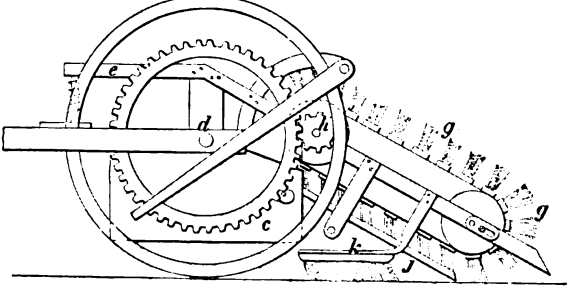

29103

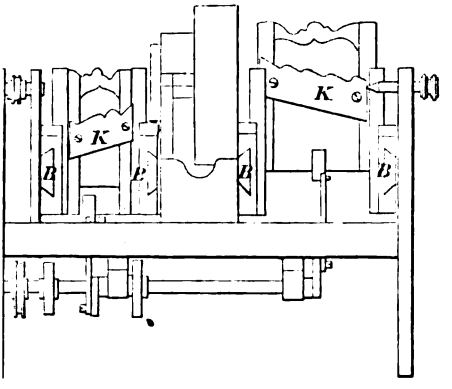

29104

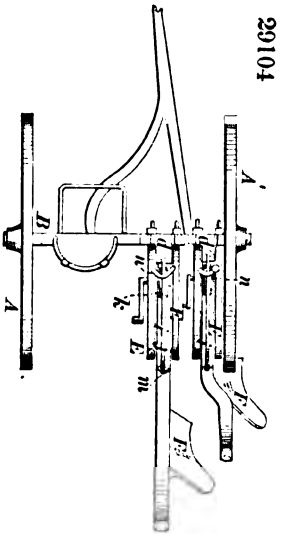

29105

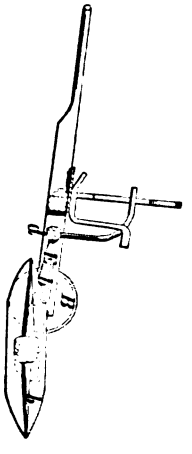

29106

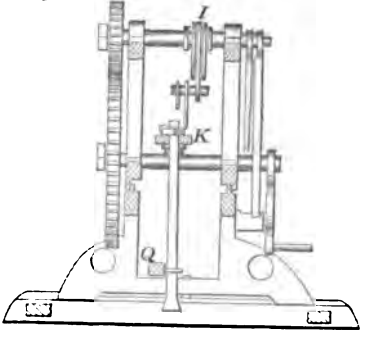

29107

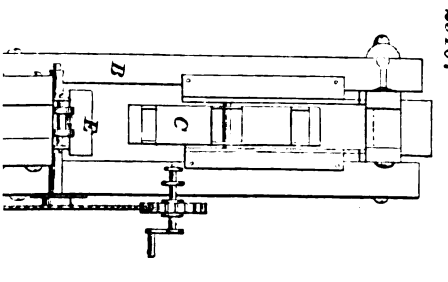

29108

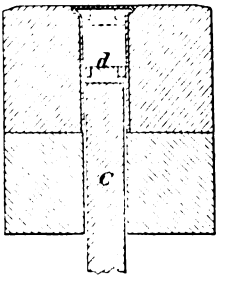

29109

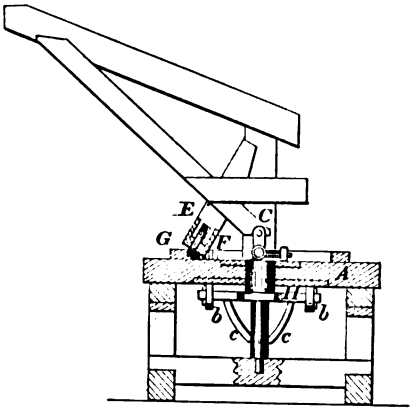

29110

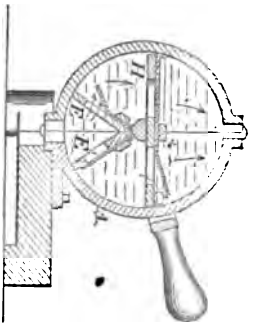

29112

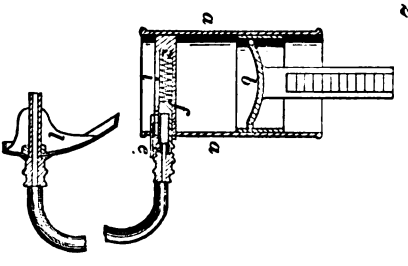

29111

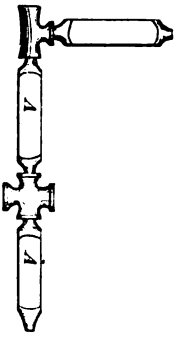

29113

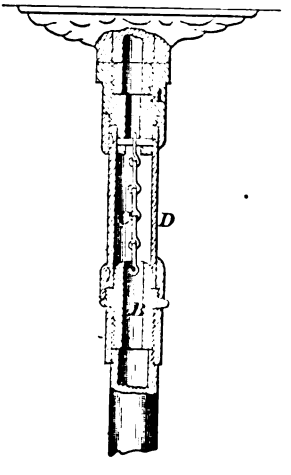

29114

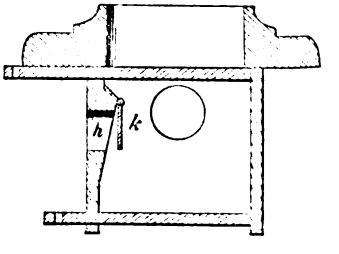

29115

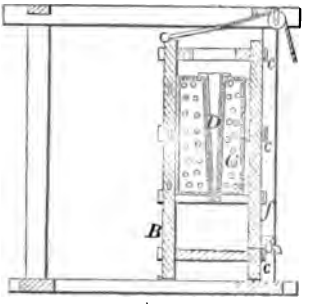

29116

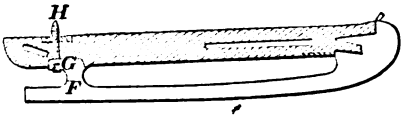

29117

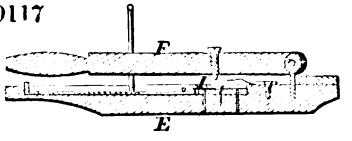

29118

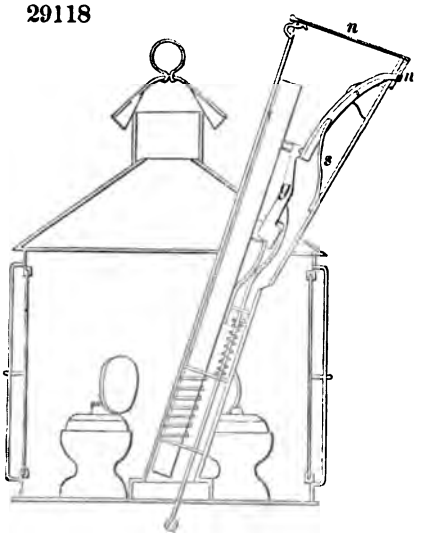

29120

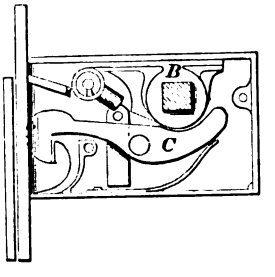

29119

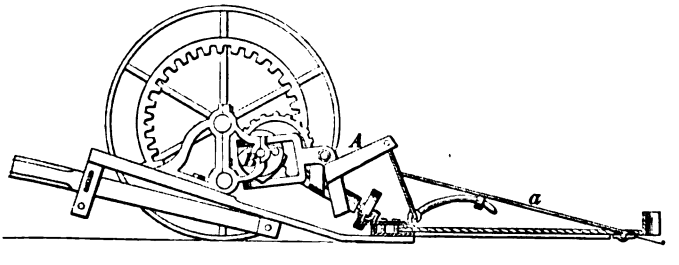

29121

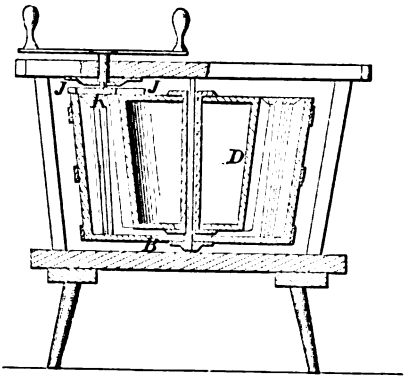

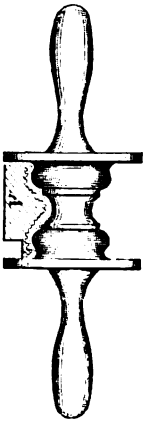

29123

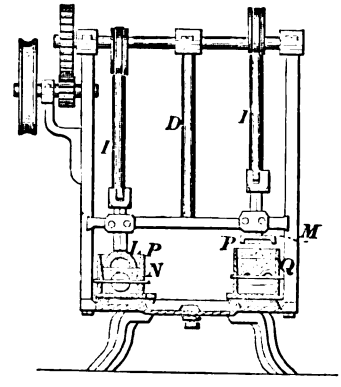

29124

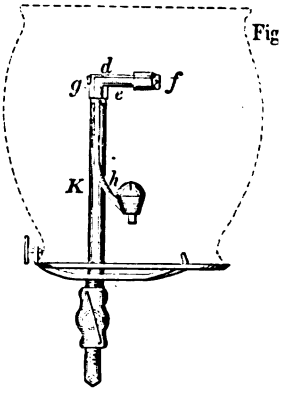

Fig. 2

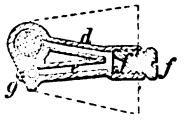

29126

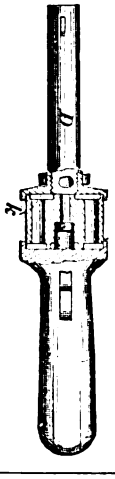

29125

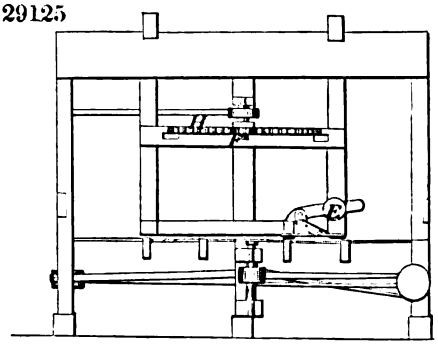

29127

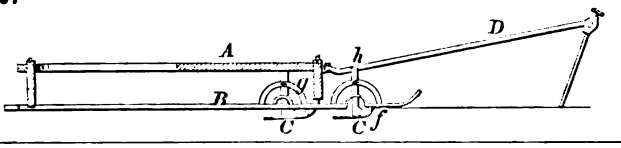

128

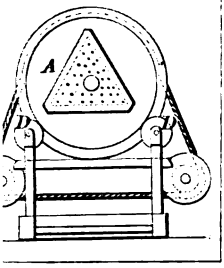

29129

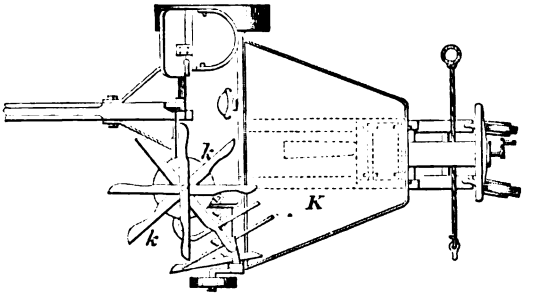

29130

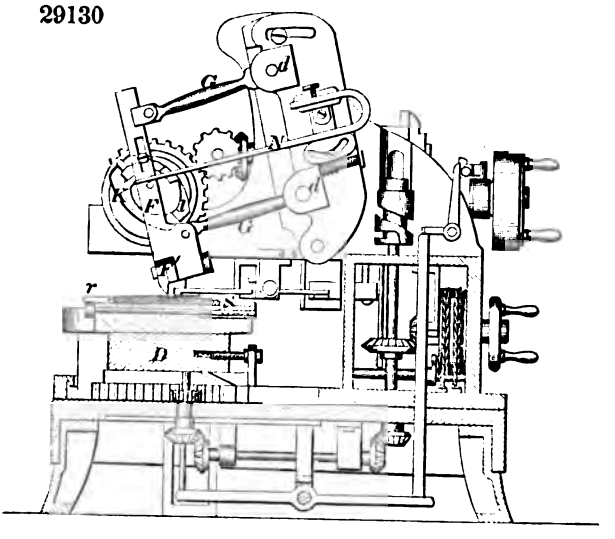

8

E

29131

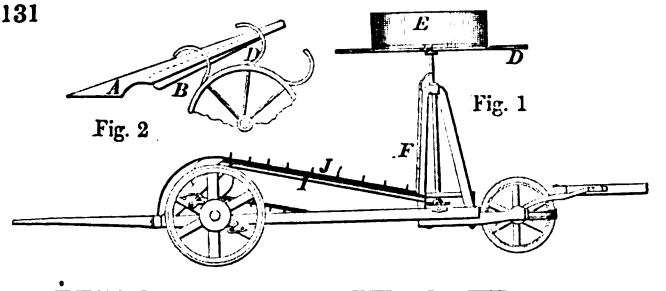

29132

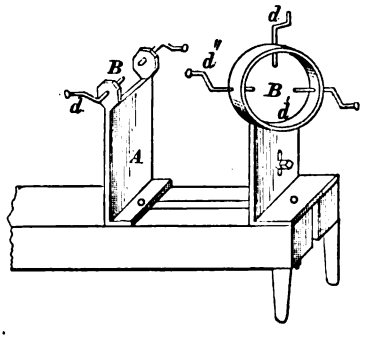

29133

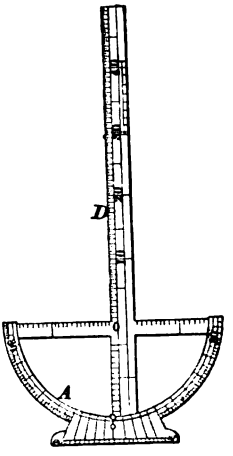

29134

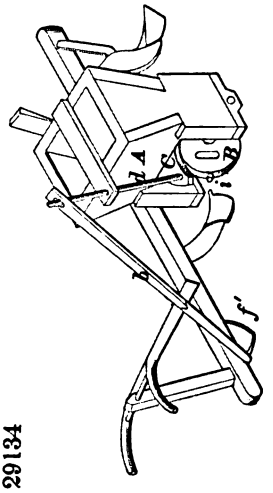

29135

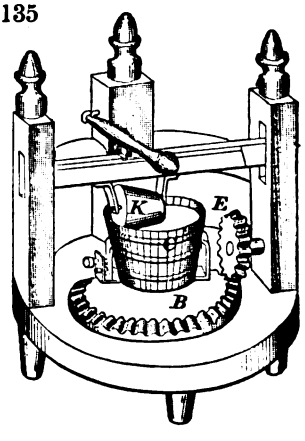

29136

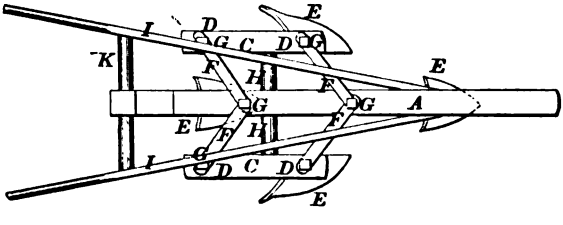

29137

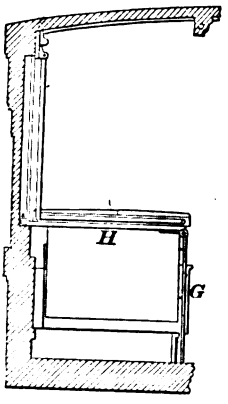

29139

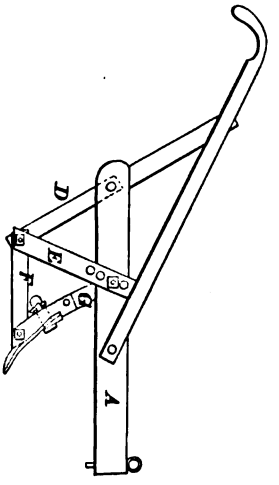

29141

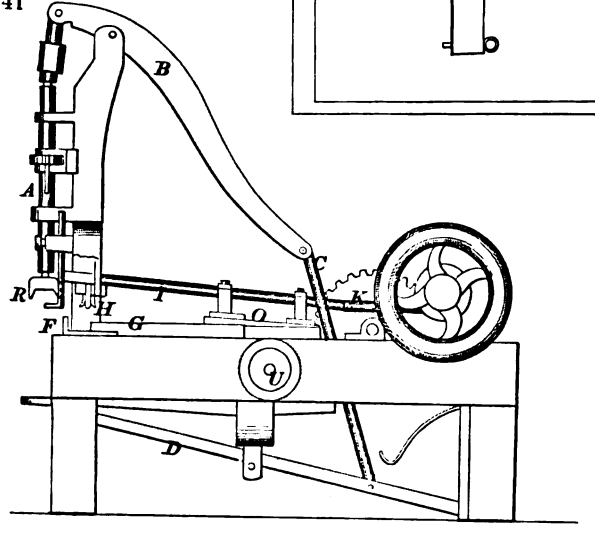

29142

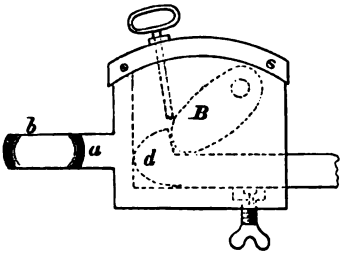

29145

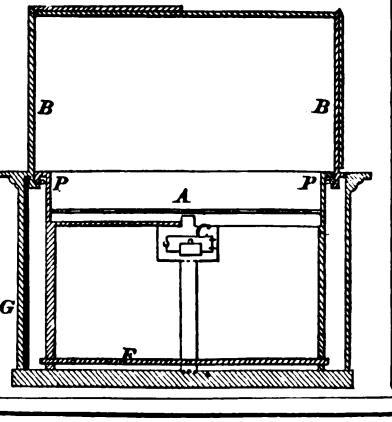

29146

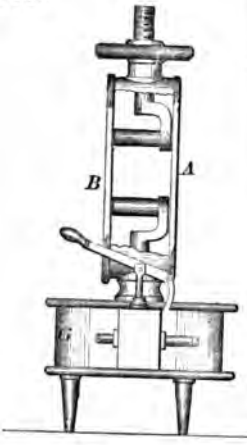

29147

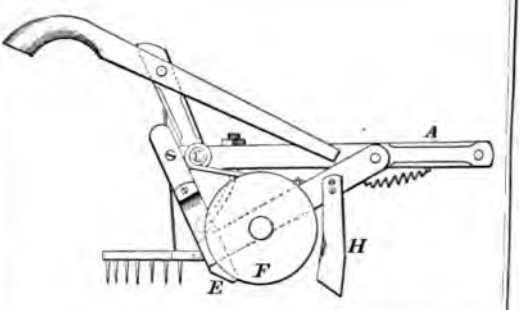

29148

29149

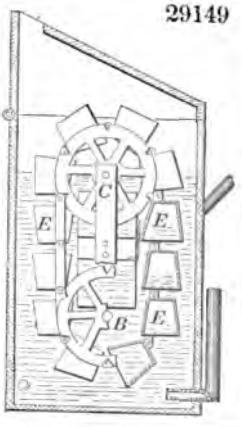

29150

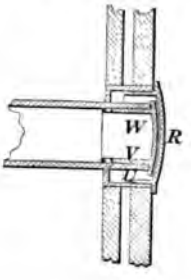

29151

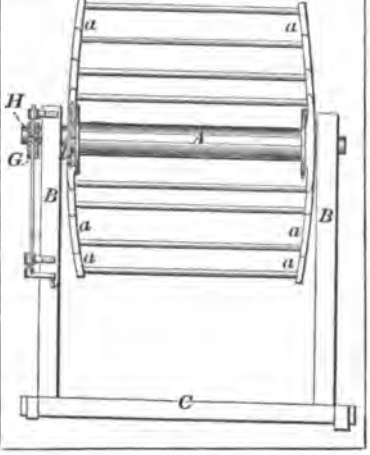

29152

53

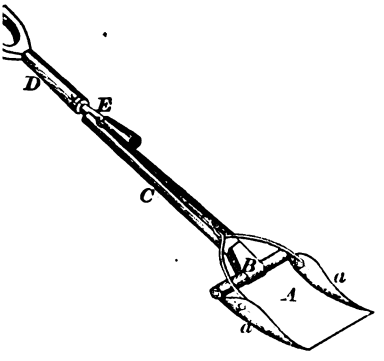

29154

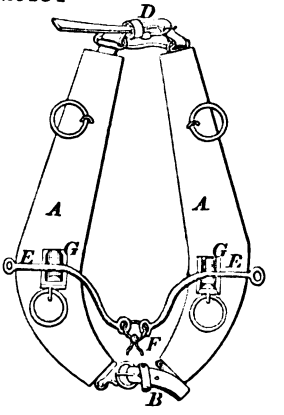

55

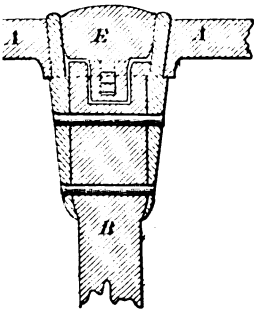

29156

Fig. 1

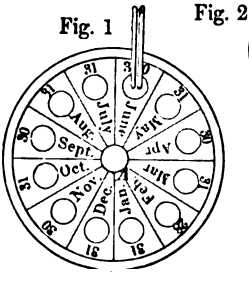

Fig. 2

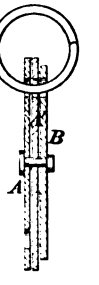

29159

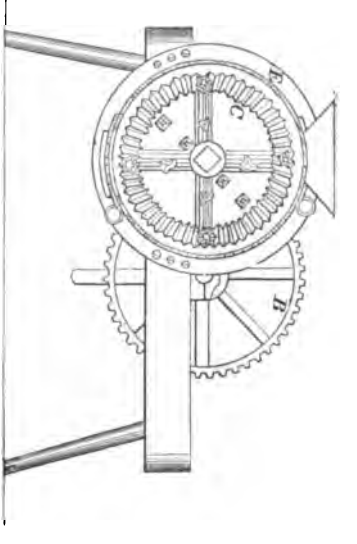

7

Fig. 1

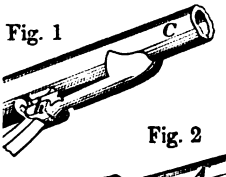

Fig. 2

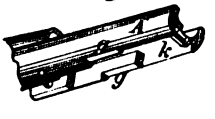

29160

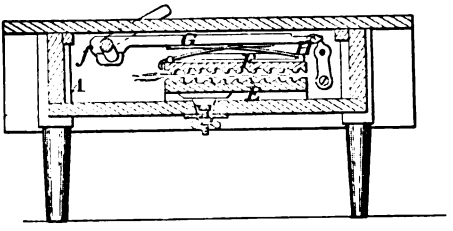

29161

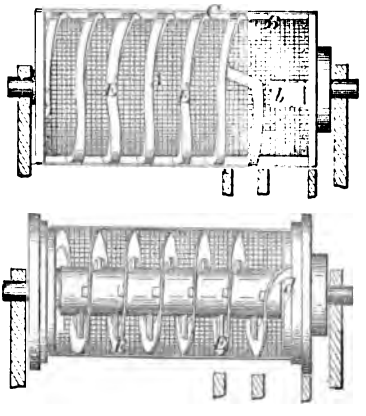

29162

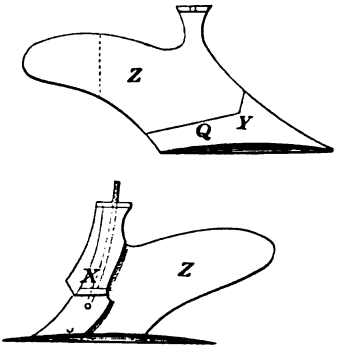

29163

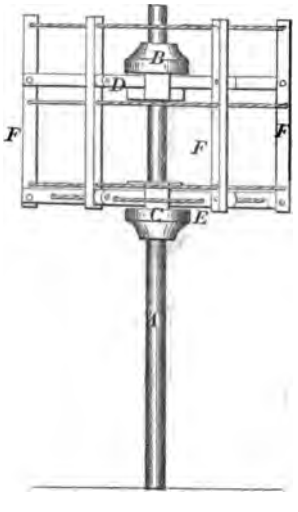

29165

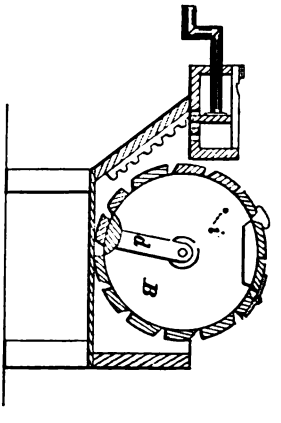

29166

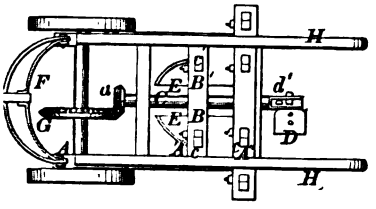

29167

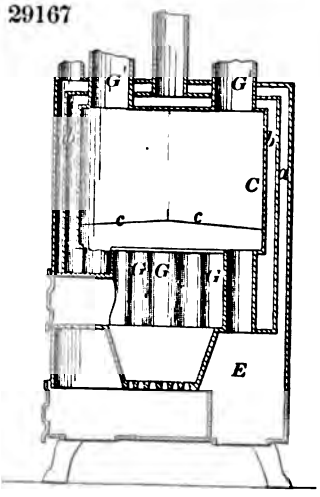

168

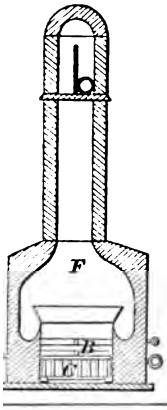

29169

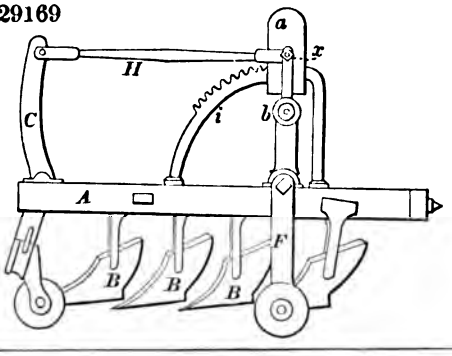

171

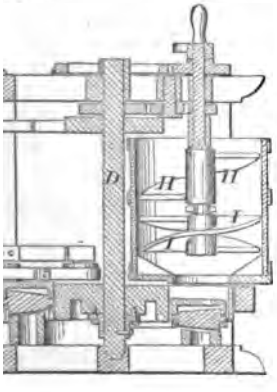

29170

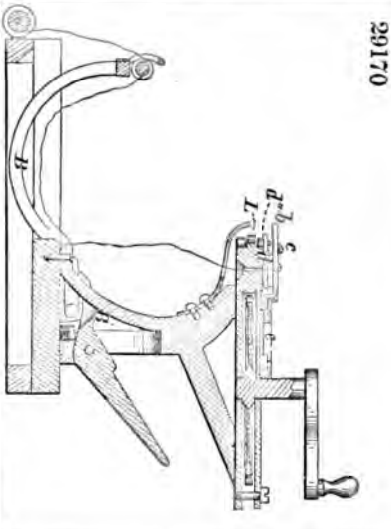

29172

29174

29175

29176

29177

78

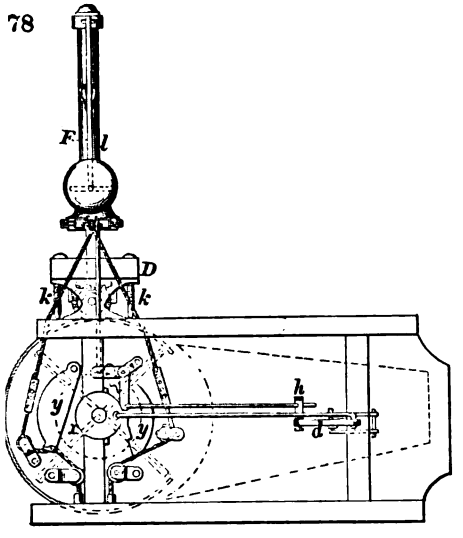

29179

)180

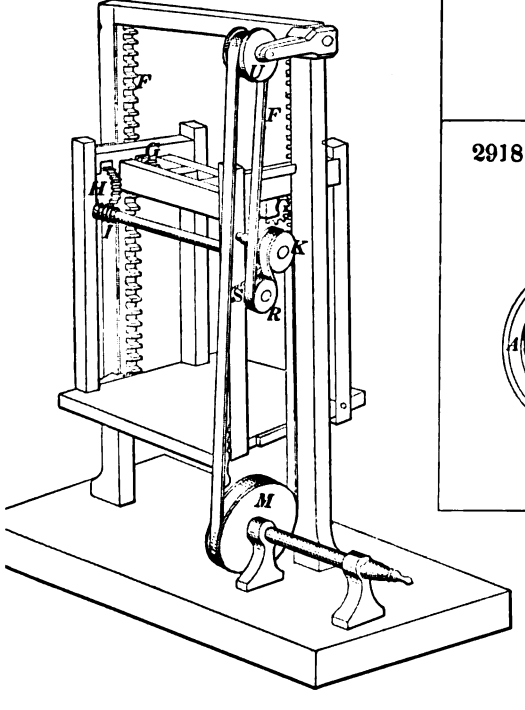

29181

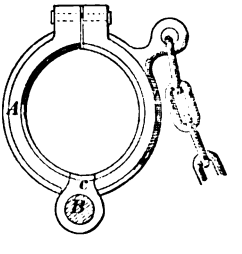

29182

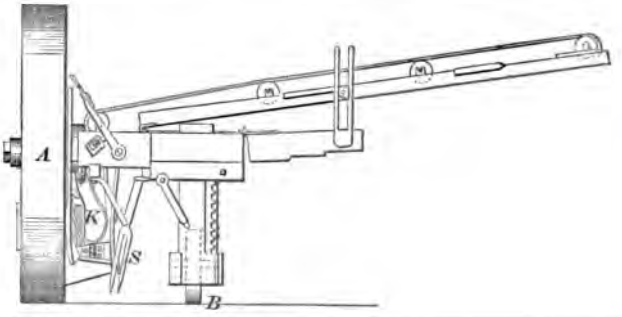

29188

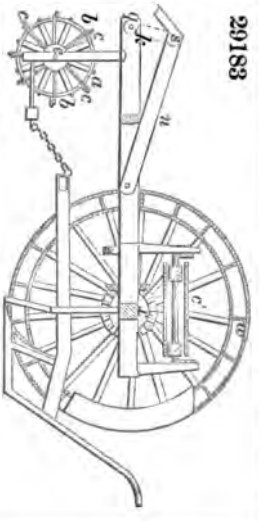

29184

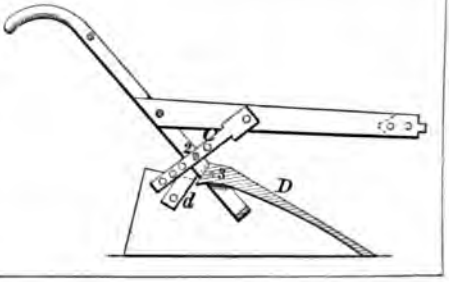

29185

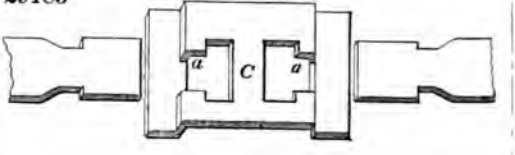

29186

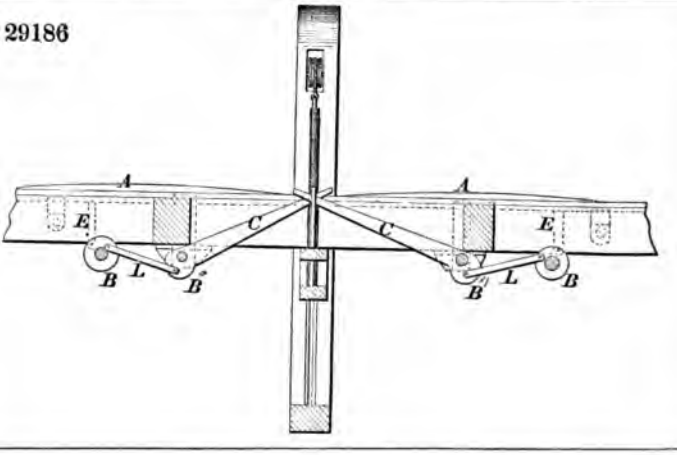

29187

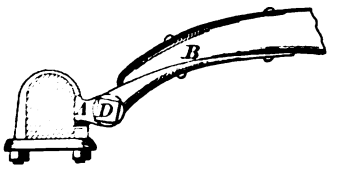

29188

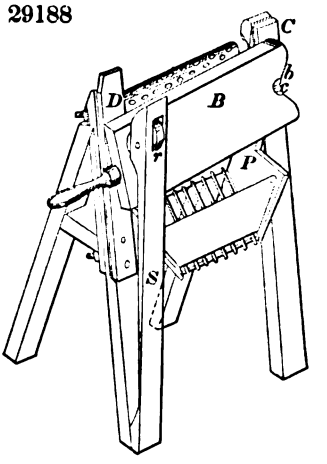

29189

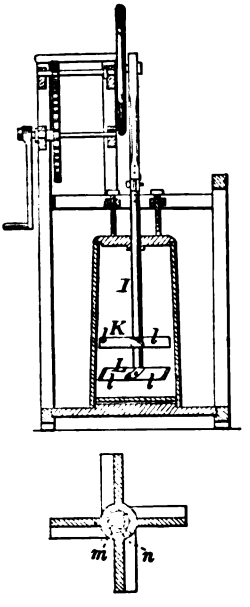

29190

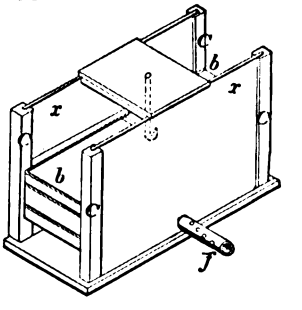

29191

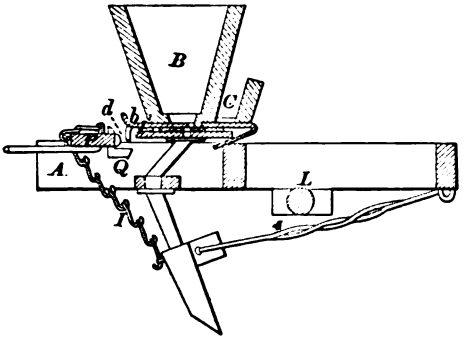

29192

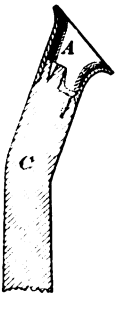

29193

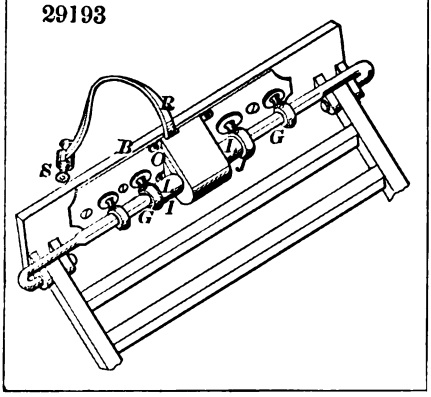

29194

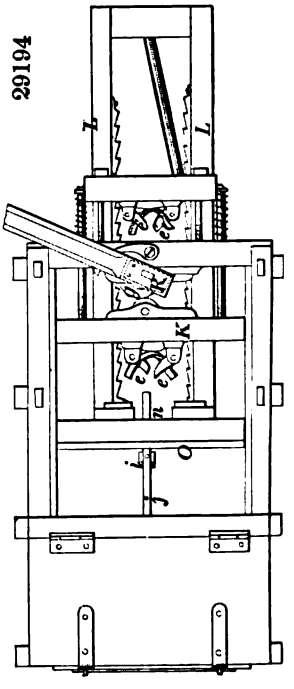

29195

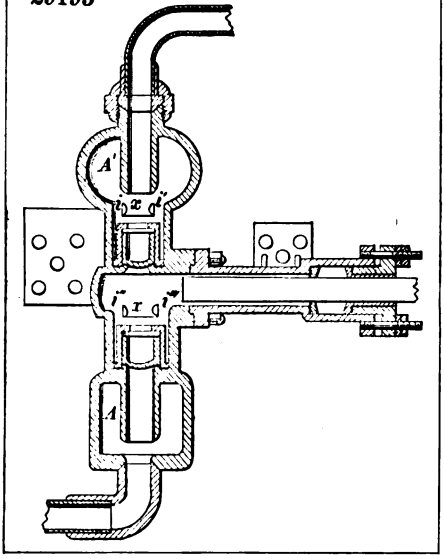

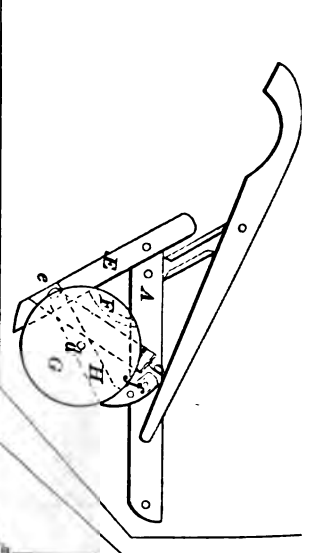

29197

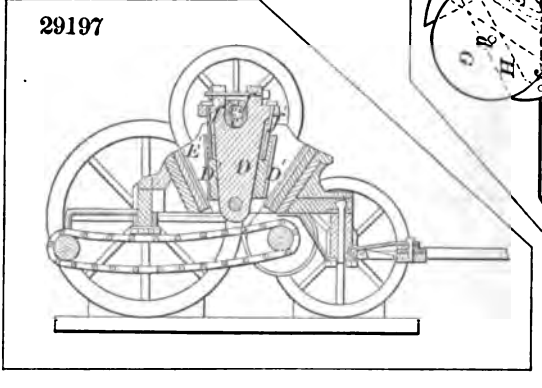

29198

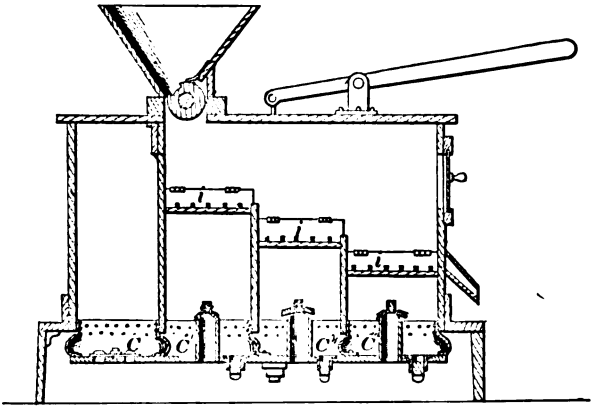

9199

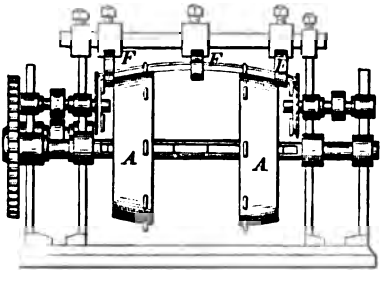

29201

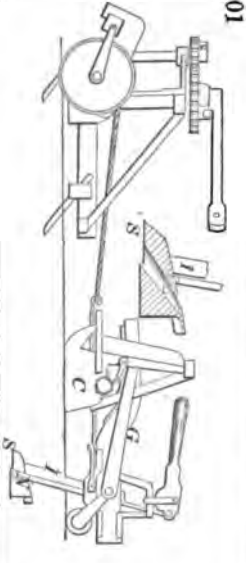

29200

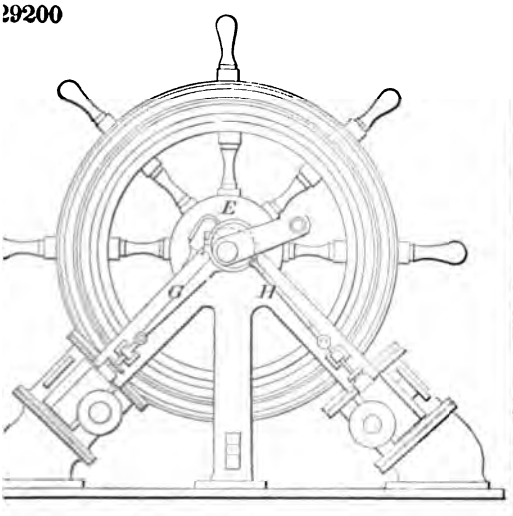

29202

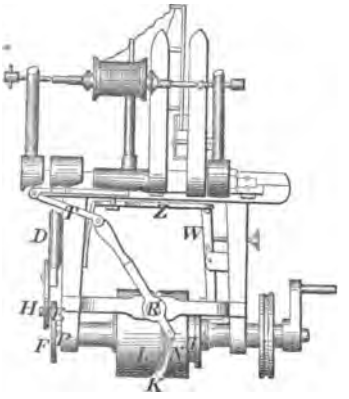

29203

Fig. 1

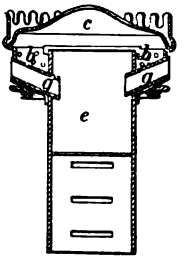

Fig. 2

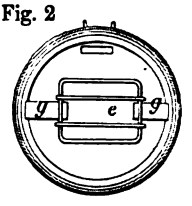

29204

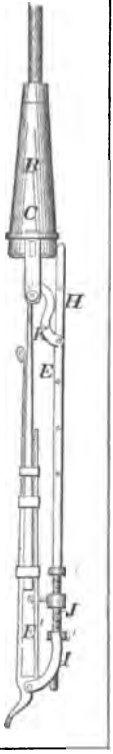

29205

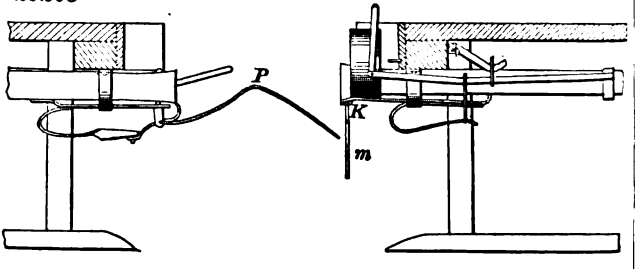

29206

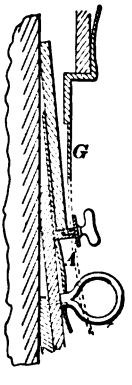

29207

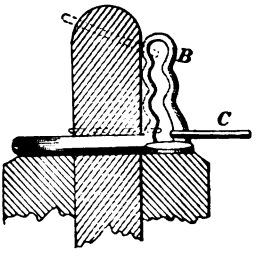

29208

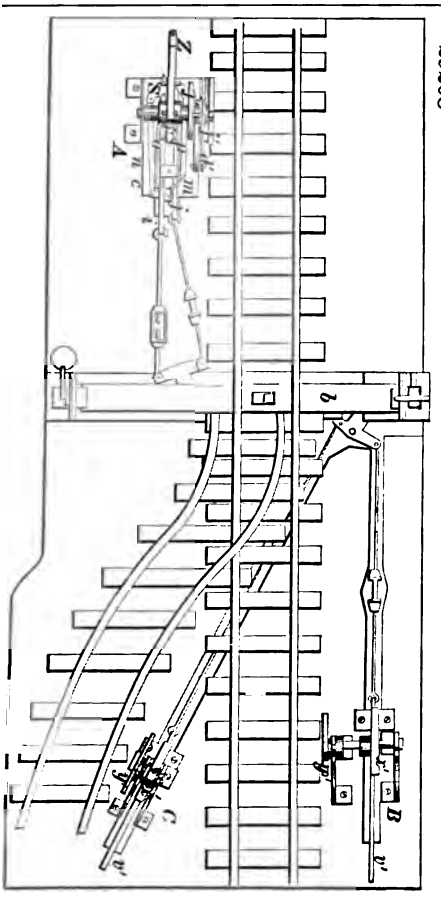

29209

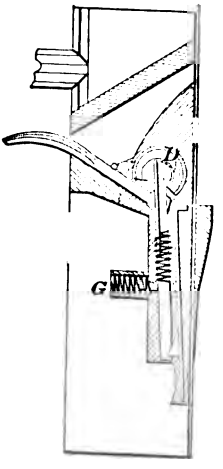

29211

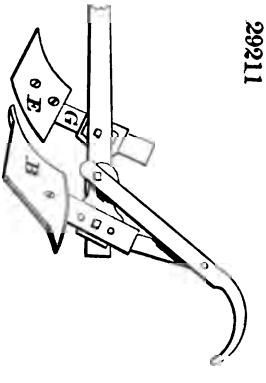

29210

29212

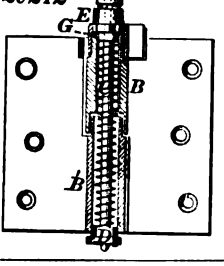

29213

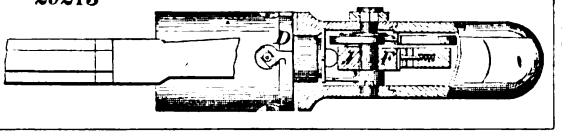

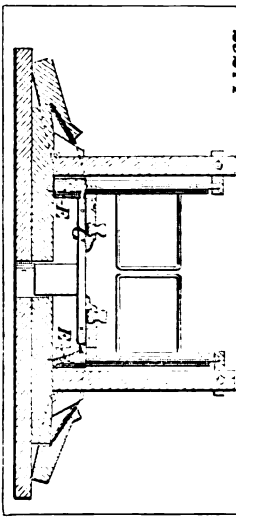

29215

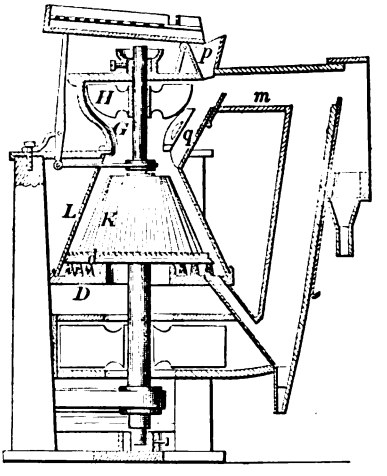

29216

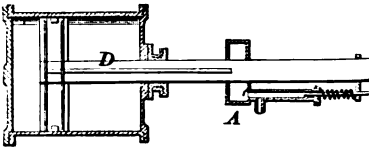

29217

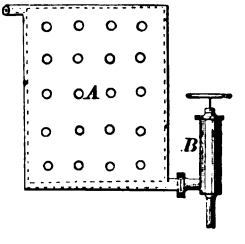

29218

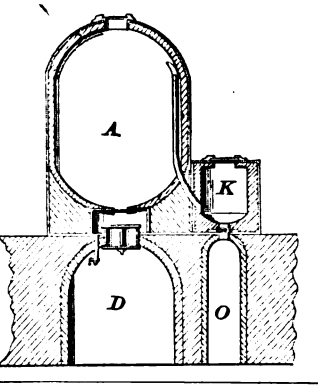

29219

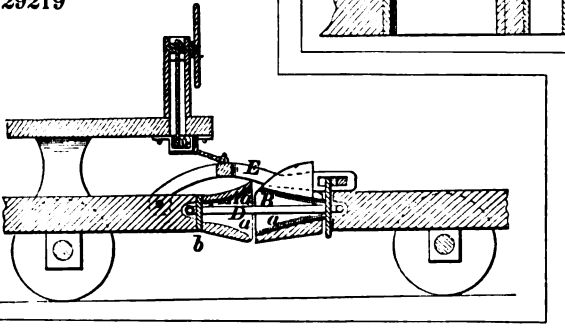

29220

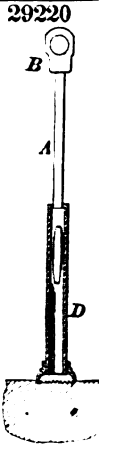

29221

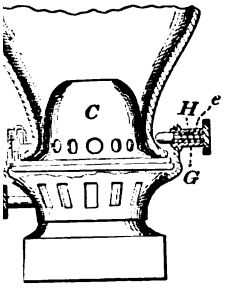

29222

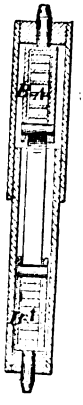

29223

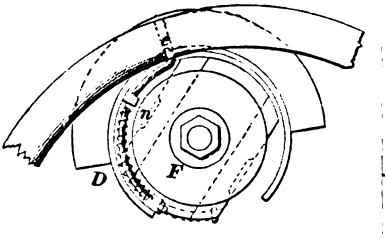

9224

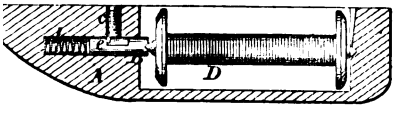

29225

Fig. 1

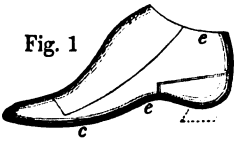

Fig. 2

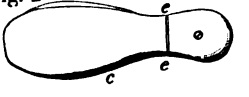

29227

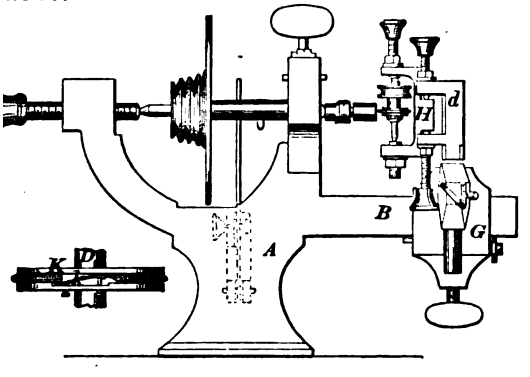

29226

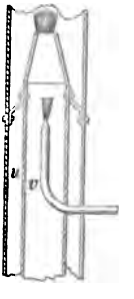

29228

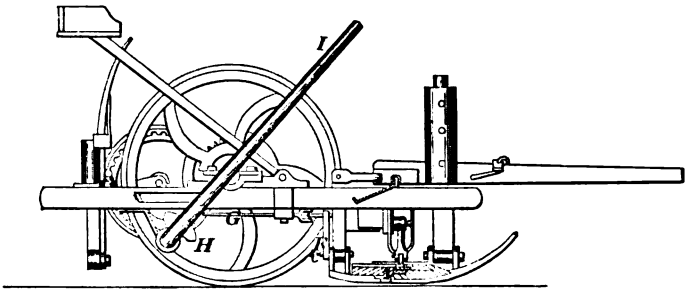

29229

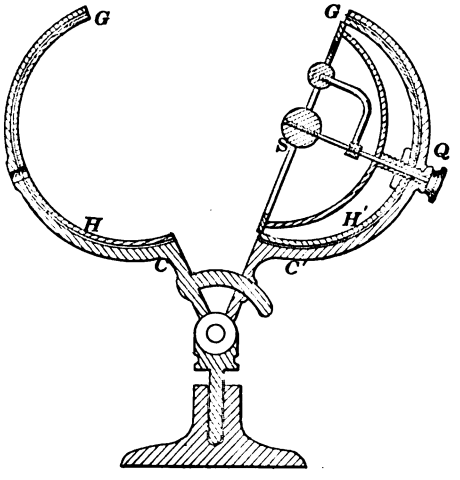

29230

29231

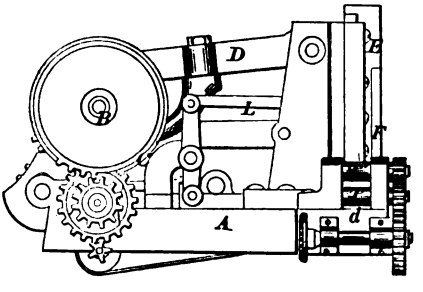

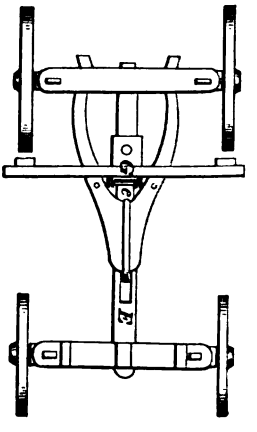

233

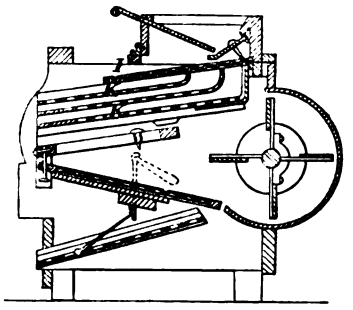

29234

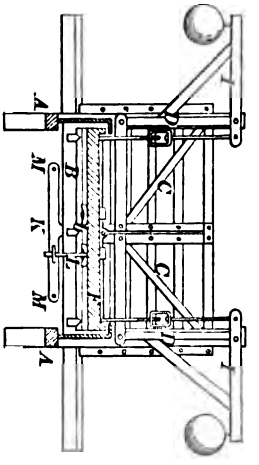

235

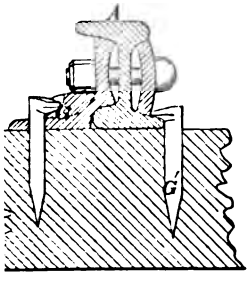

29236

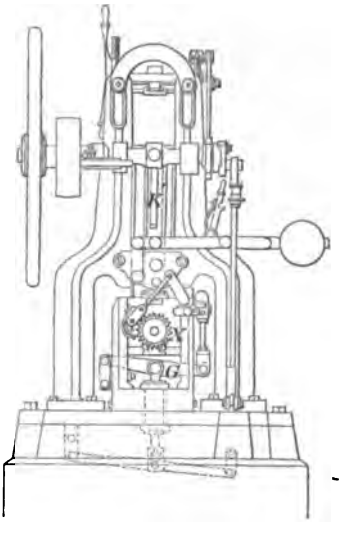

237

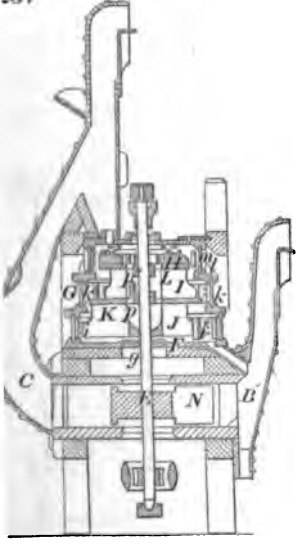

29238

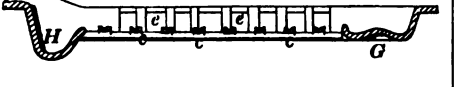

29239

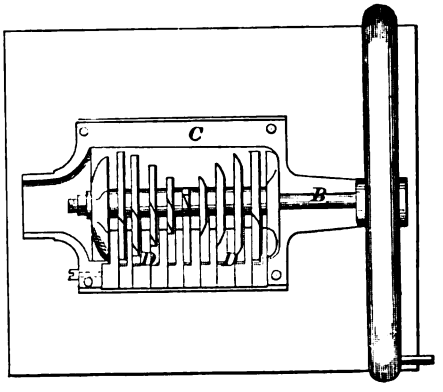

29240

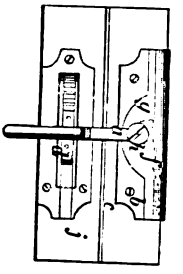

29241

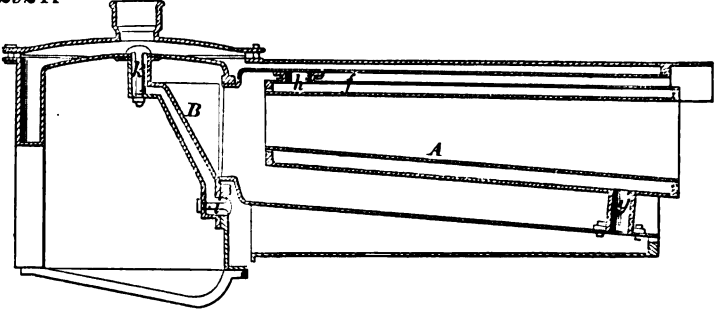

29242

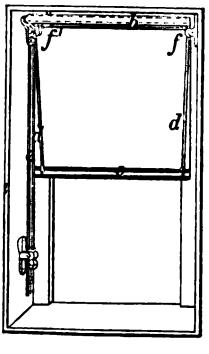

29244

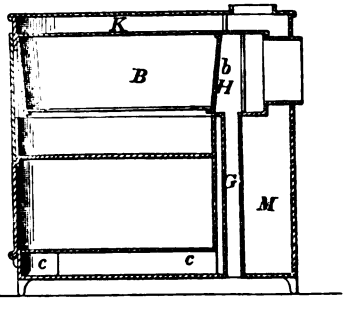

29245

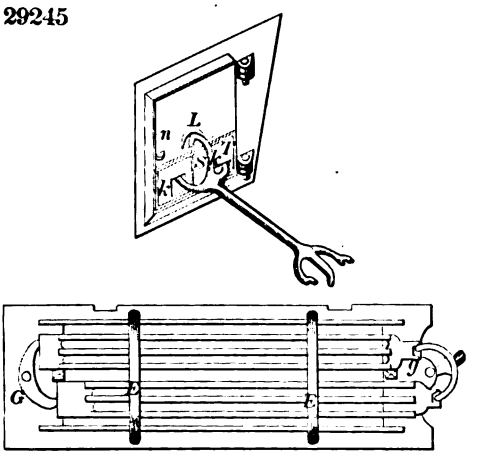

29248

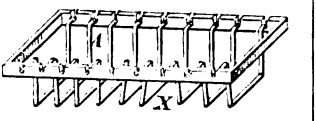

29246

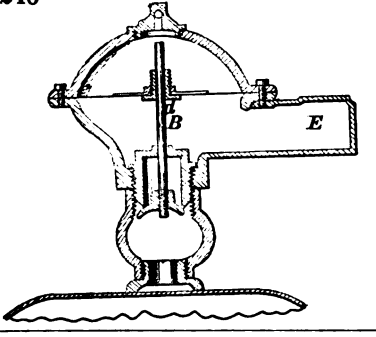

29249

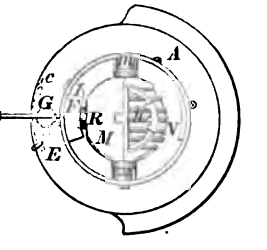

29247

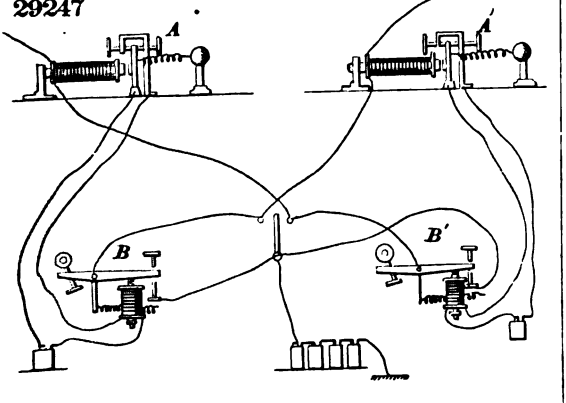

29250

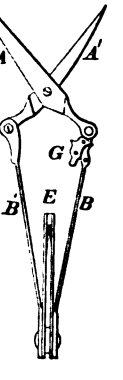

29252

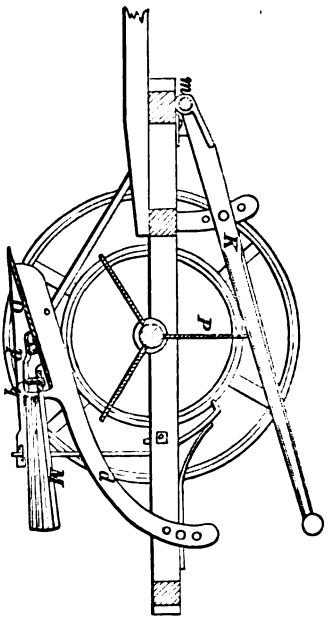

29251

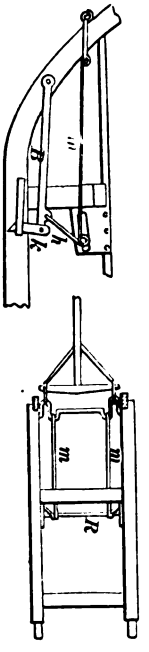

29253

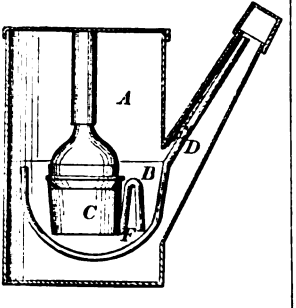

29254

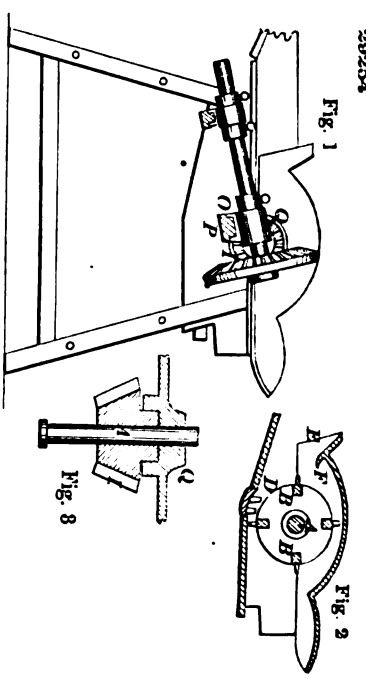

29255

29256

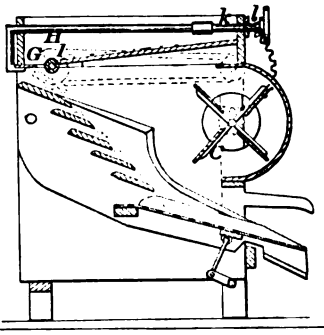

29257

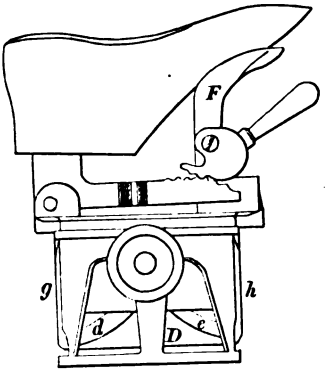

29258

29259

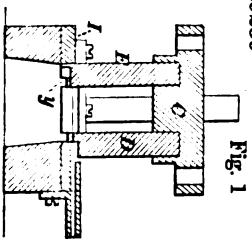

Fig. 1

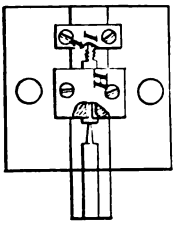

Fig. 2

29260

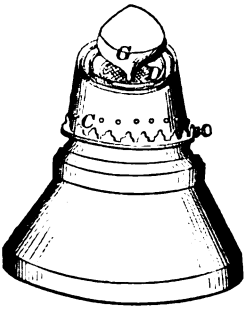

29261

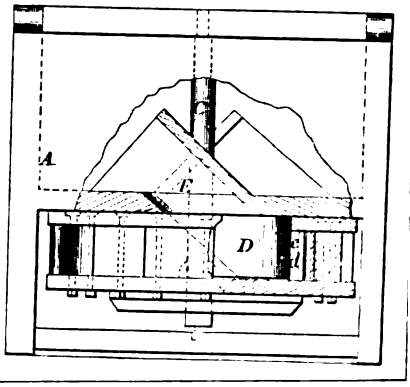

29262

Fig. 1

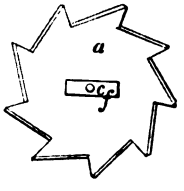

Fig. 2

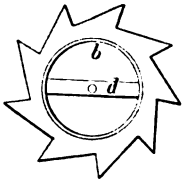

29263

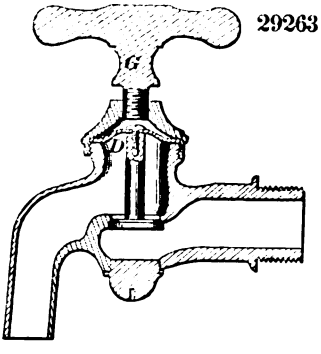

29264

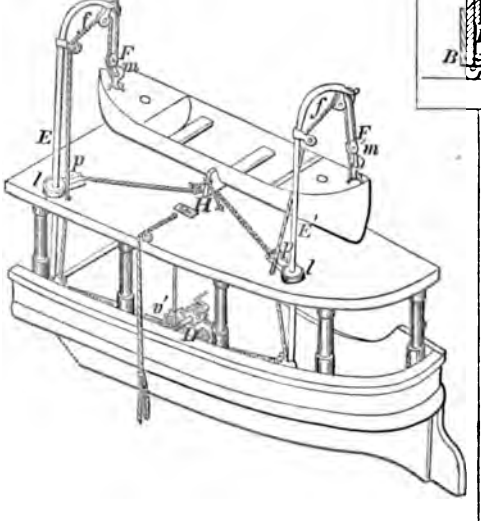

29265

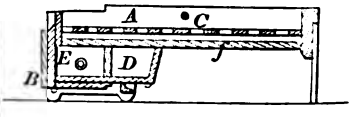

29266

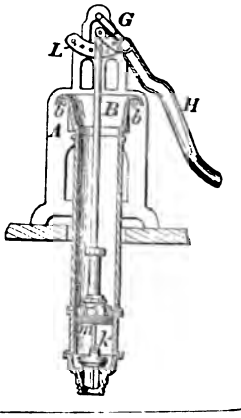

29267 Fig. 1

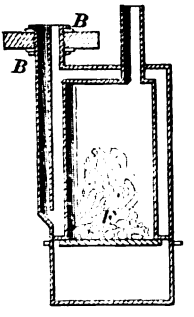

Fig. 2

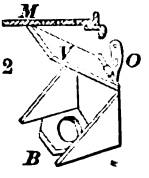

29268

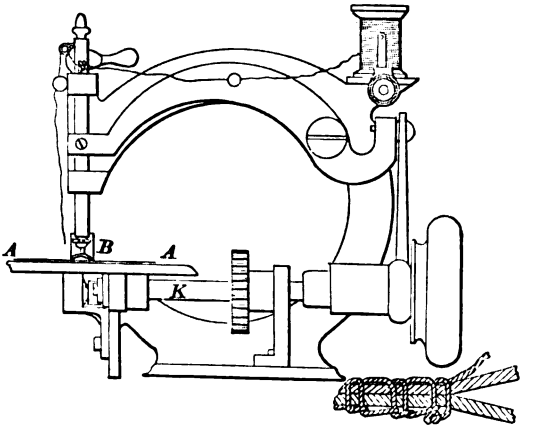

29269

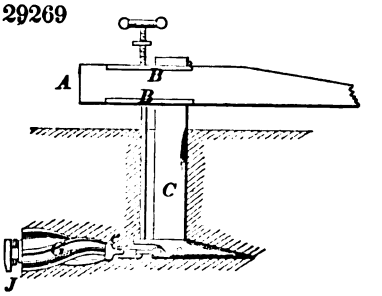

29270

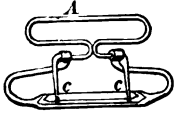

29271

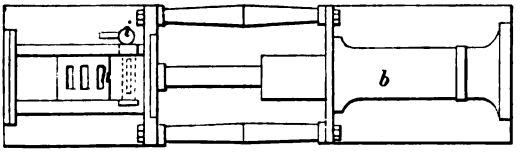

29272

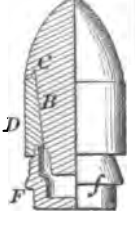

29273

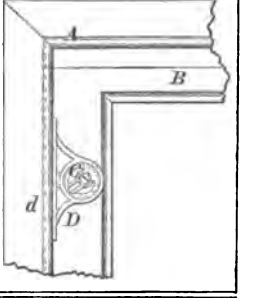

29274

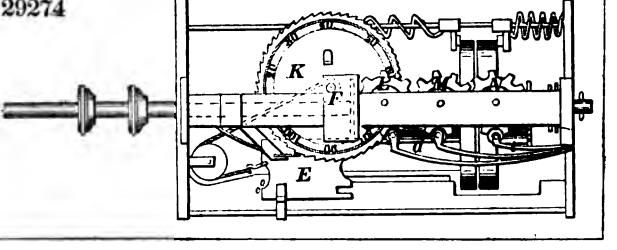

29275

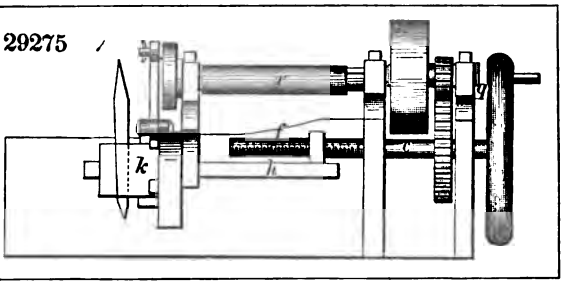

29276

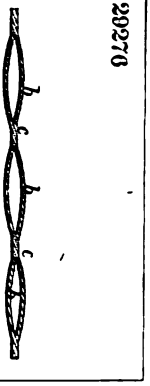

29277

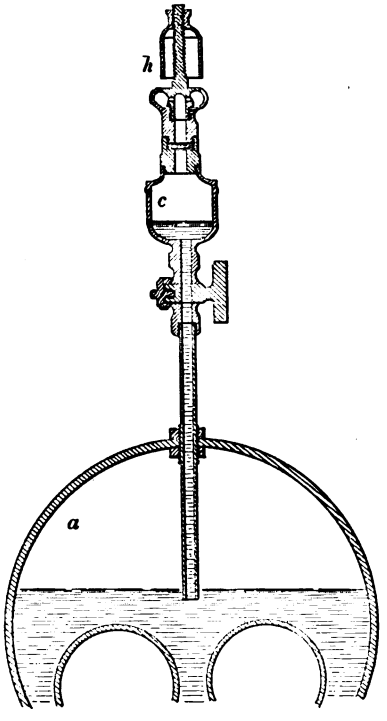

29278

Fig. 1

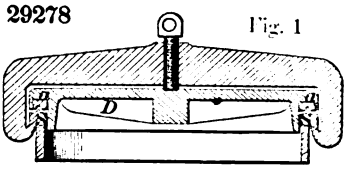

Fig. 2

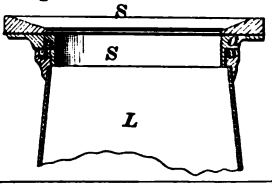

29279

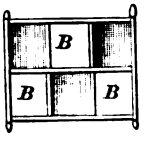

29280

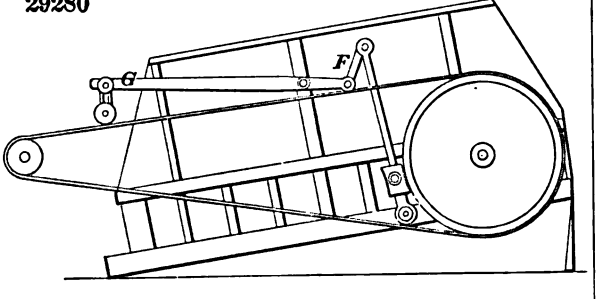

29281

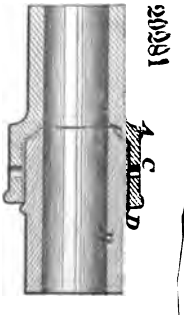

29282

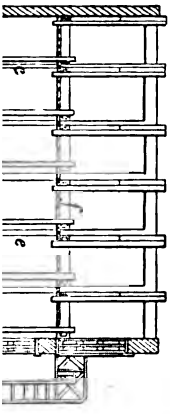

29283

Fig. 1

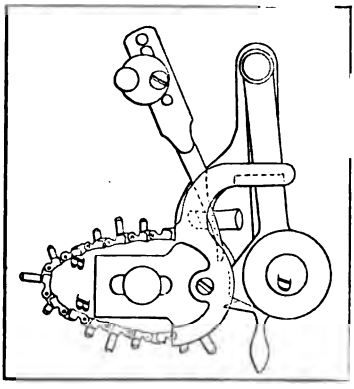

Fig. 2

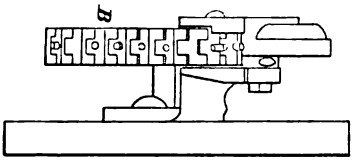

29284

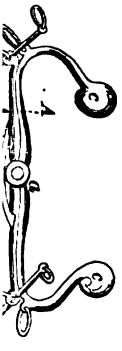

29285

Fig. 1

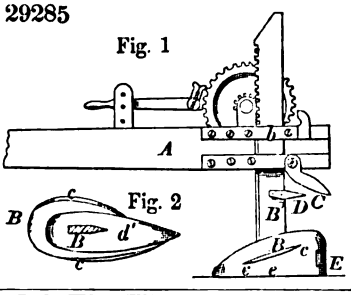

Fig. 2

29286

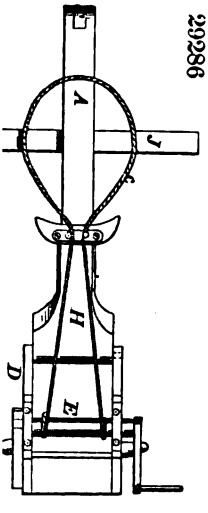

29287

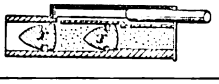

29288

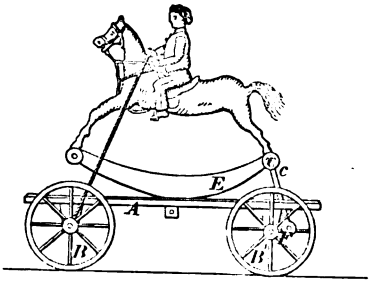

29289

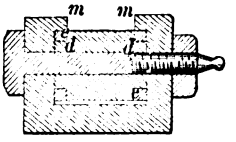

29290

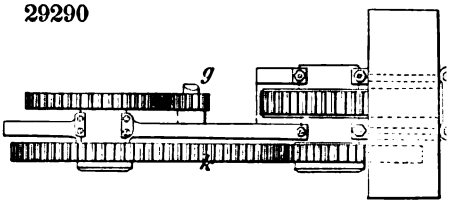

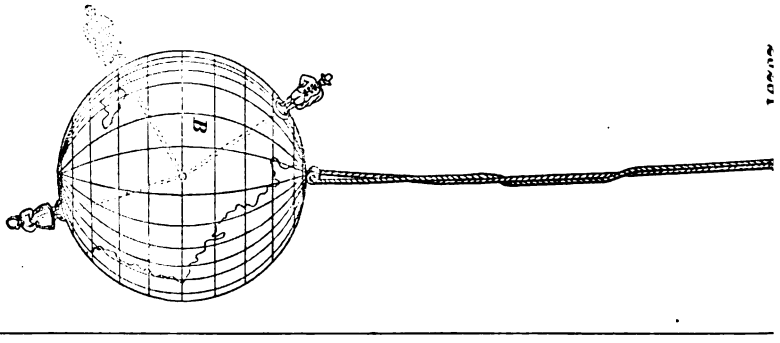

29292

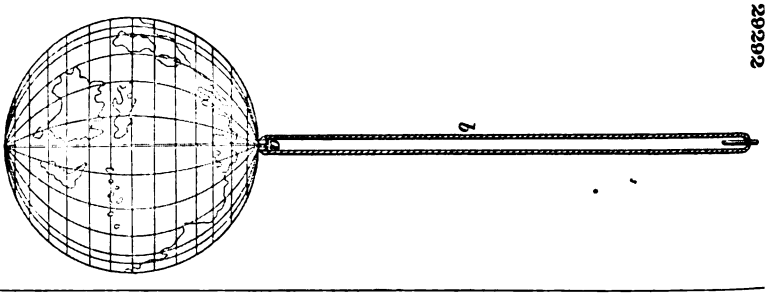

29294

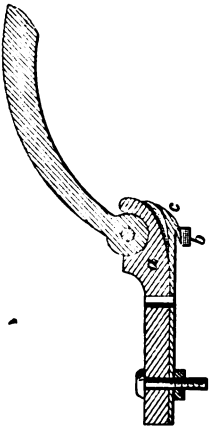

29293

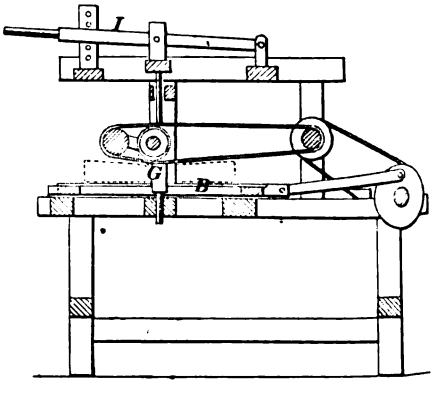

29295

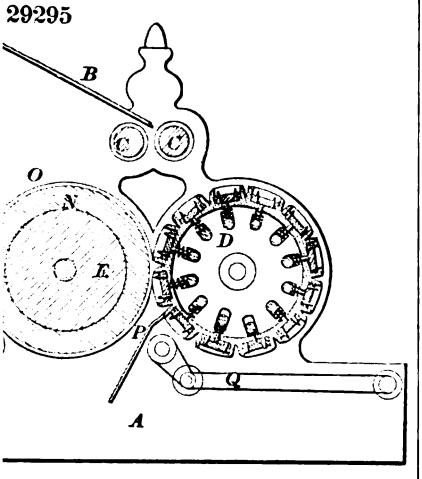

29296

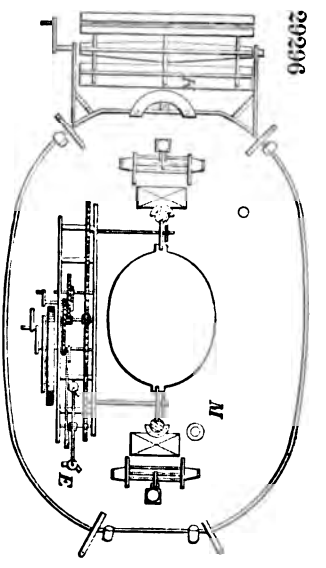

297

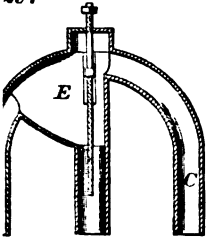

29298

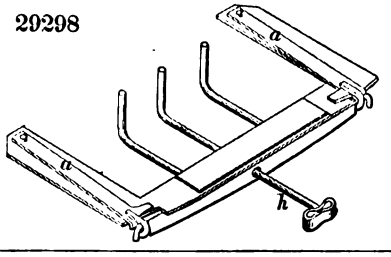

29299

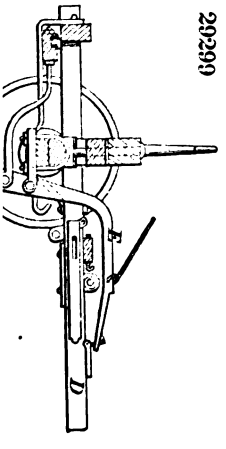

29300

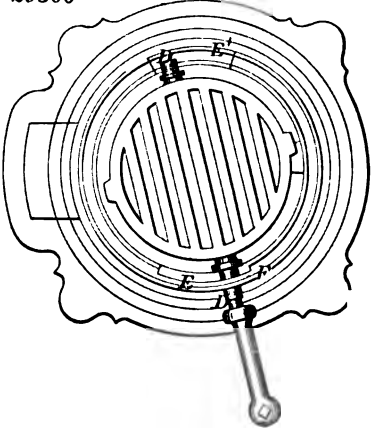

29301

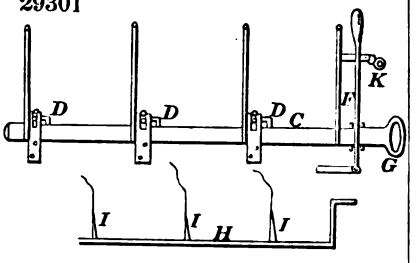

29302

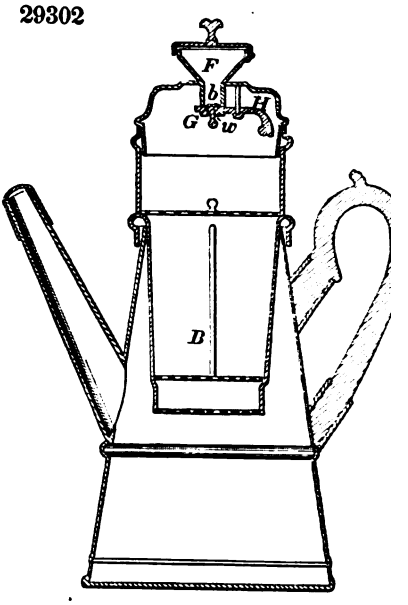

29303

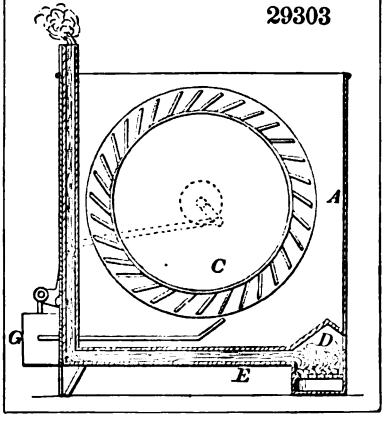

29304

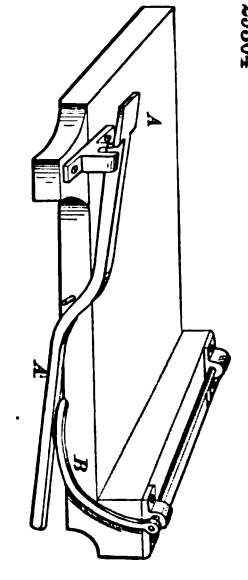

29305

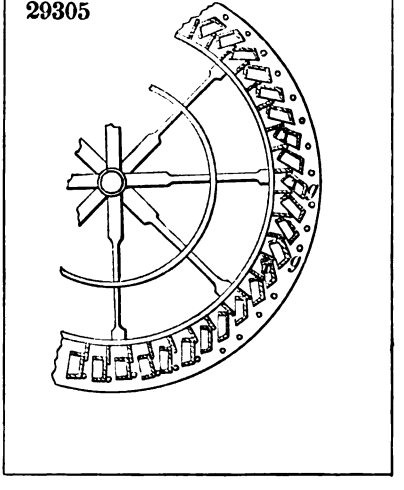

29306

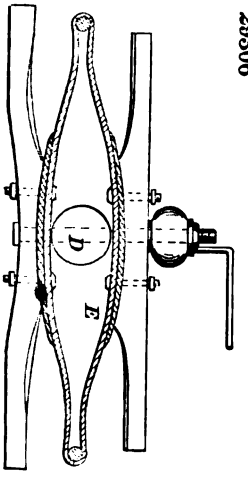

29307

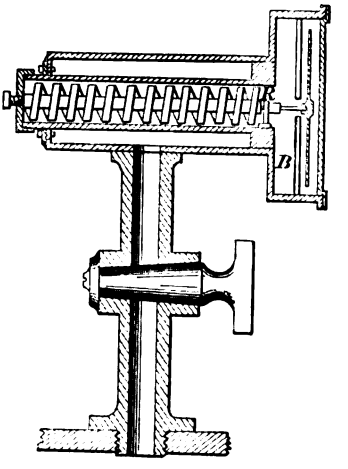

29308

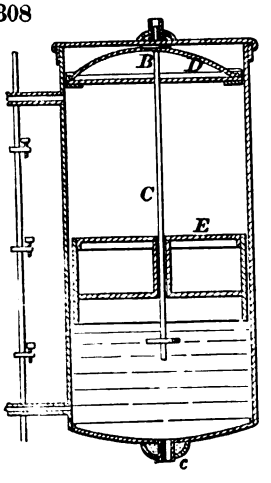

29309

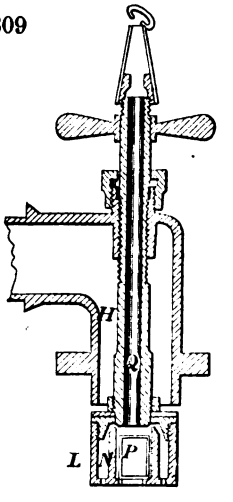

29310

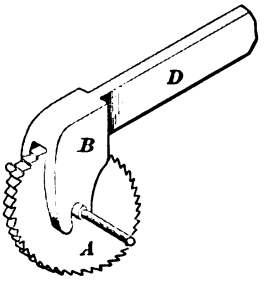

29311

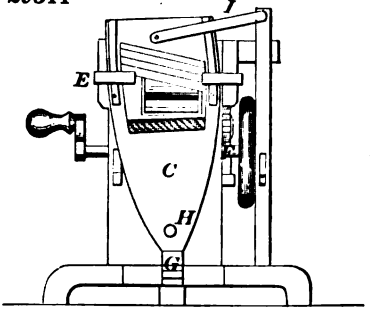

29312

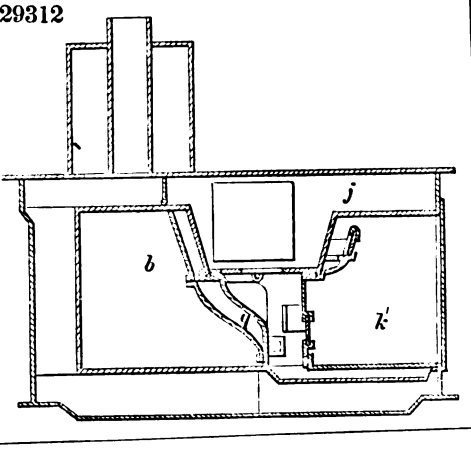

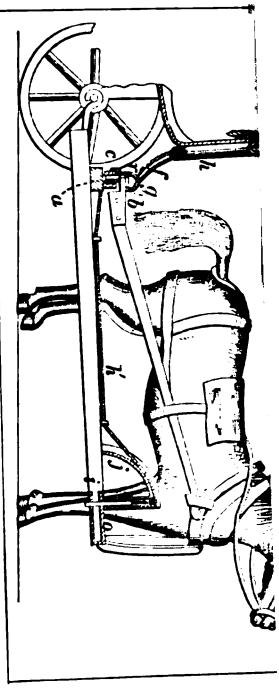

29314

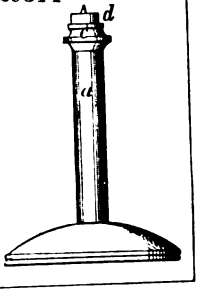

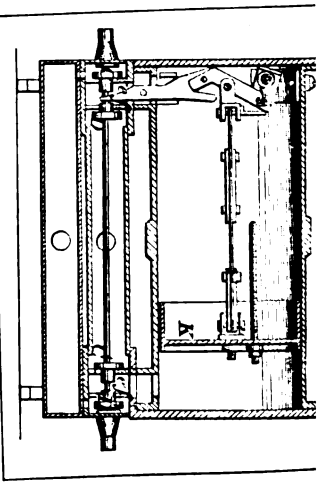

29315

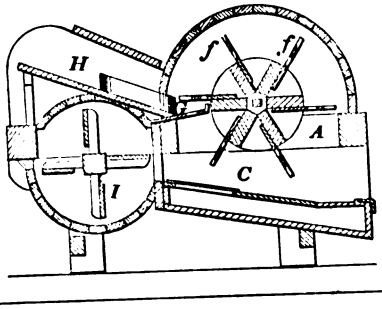

29317

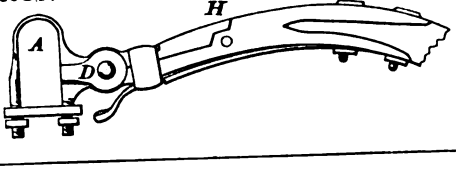

29318

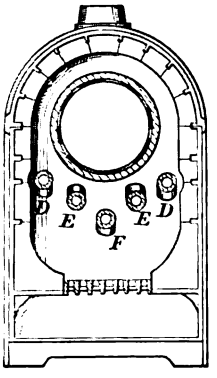

29319

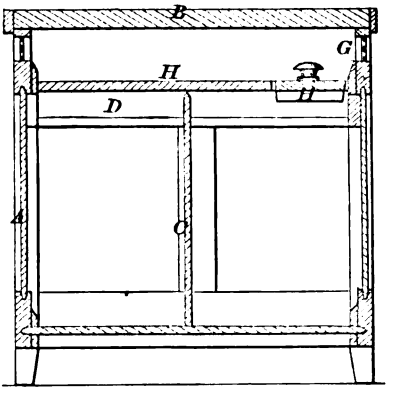

29320

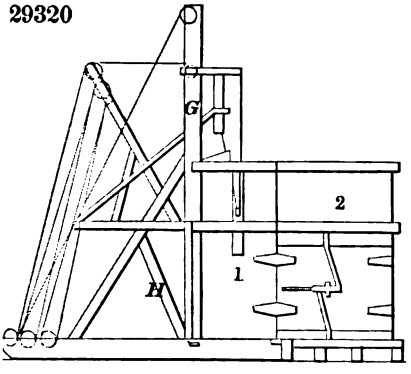

29321

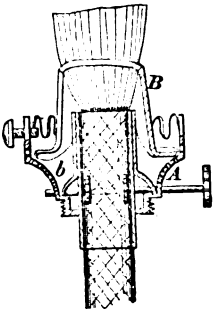

29322

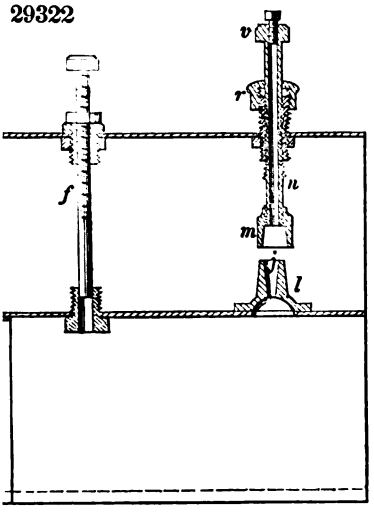

29323

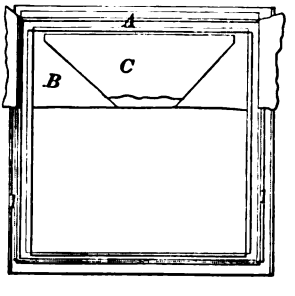

29324

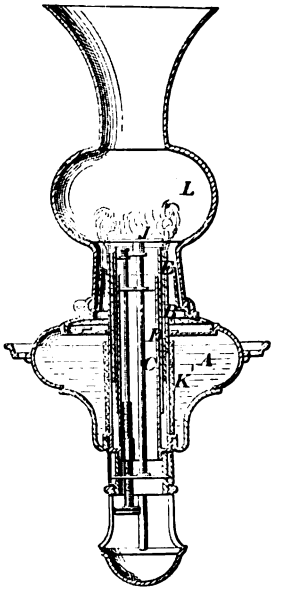

29326

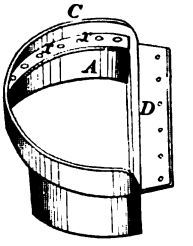

29327

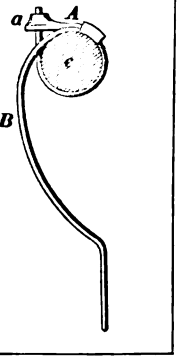

29325

Fig. 1

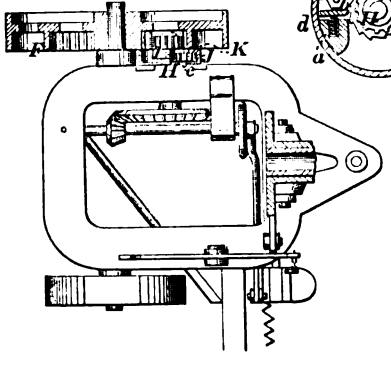

Fig. 2

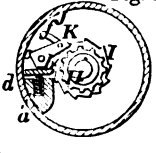

29328

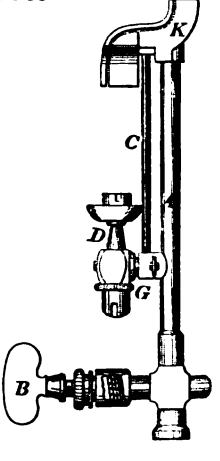

29329

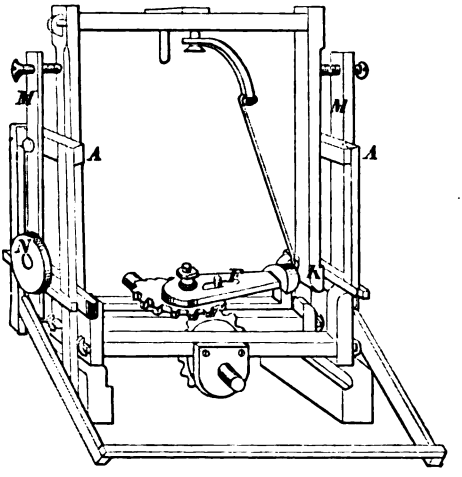

29330

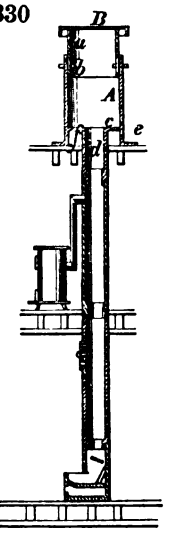

29331

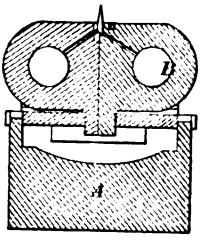

29332

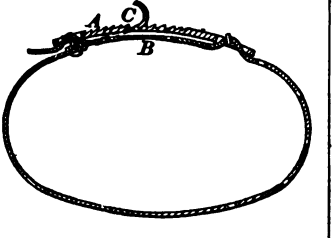

29333

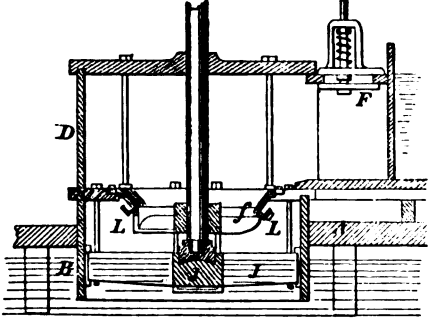

29334

29335

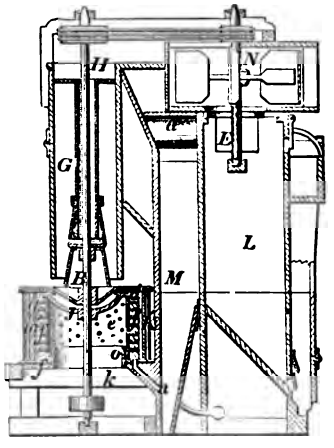

29336

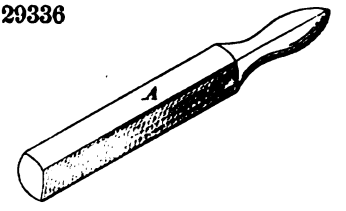

29337

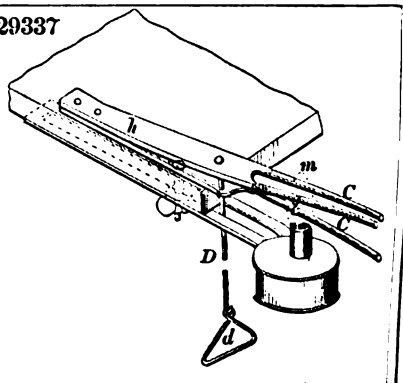

29338

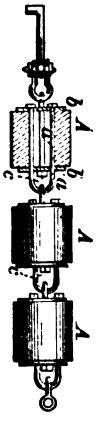

29339

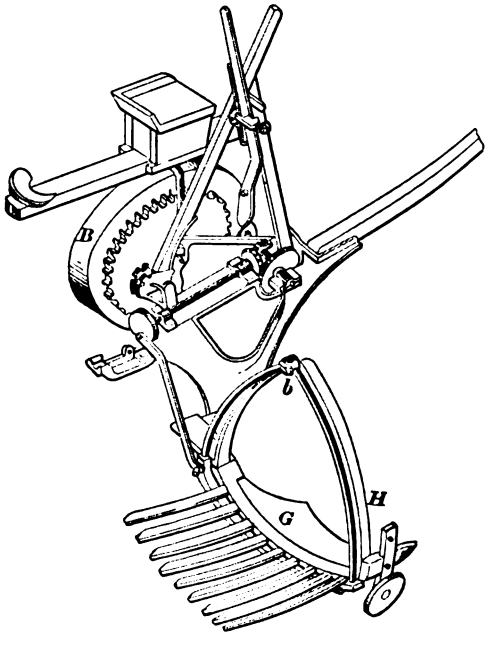

29340

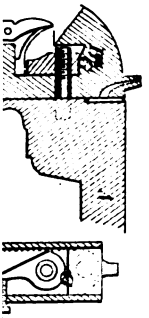

29341

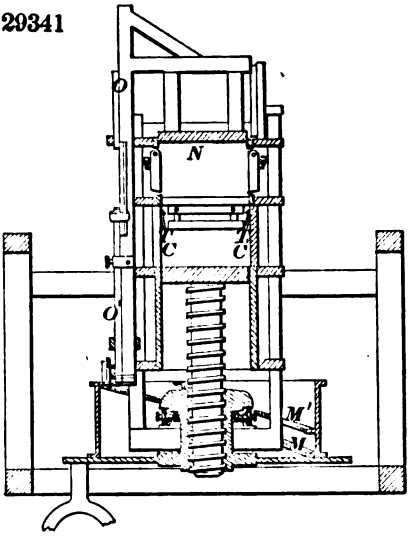

Fig. 1

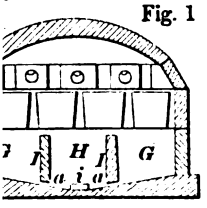

2

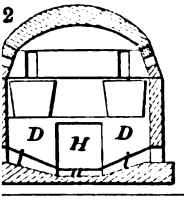

29343

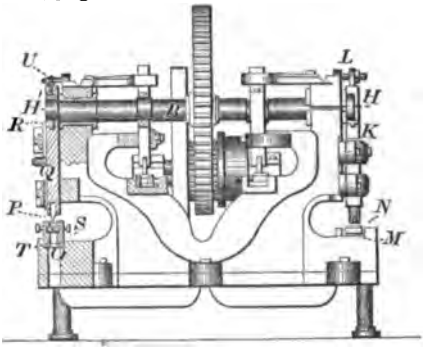

29345

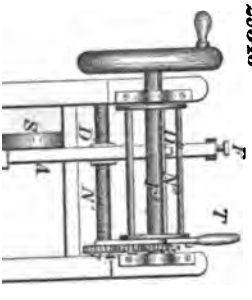

29346

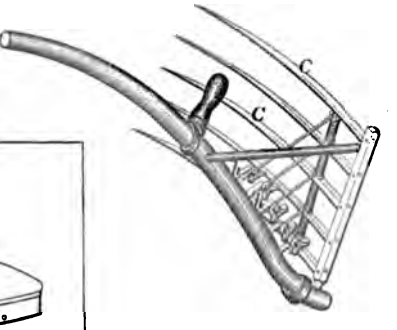

44

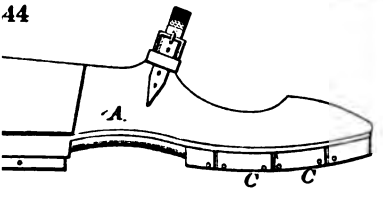

29347

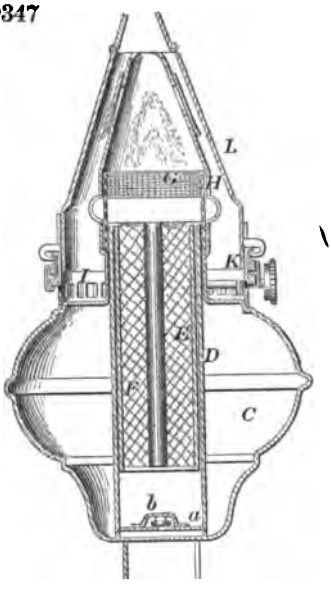

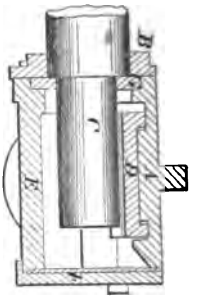

29348

29349

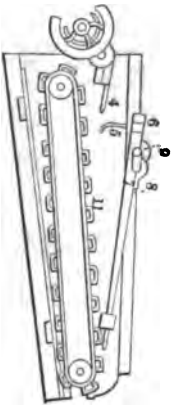

29350

Fig. 1.

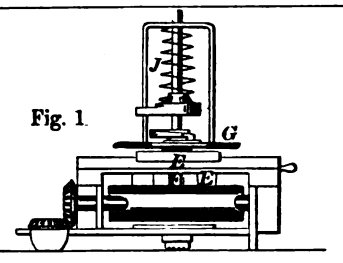

Fig. 2

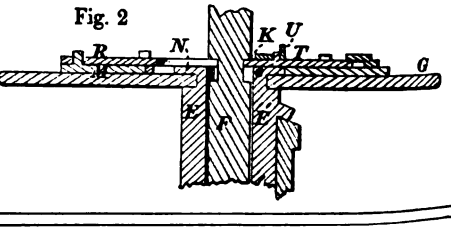

29351

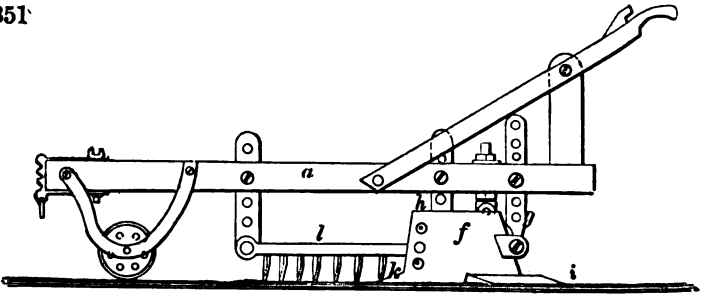

29353

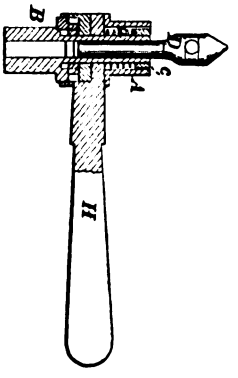

29354

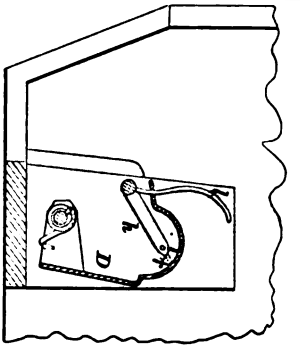

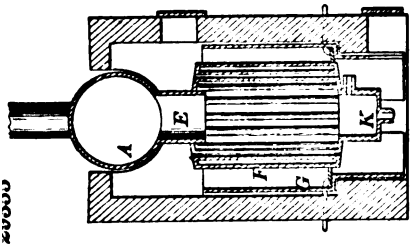

29356

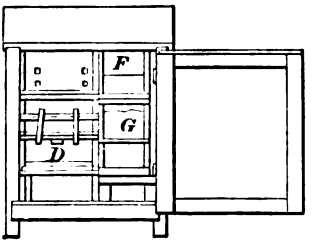

29357

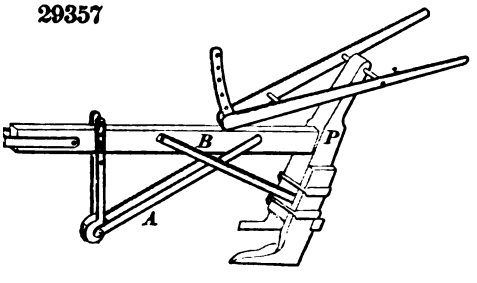

29358

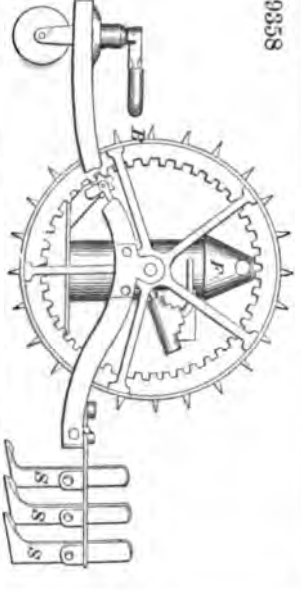

29359

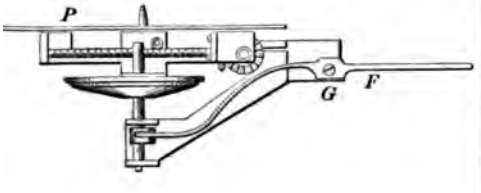

29360

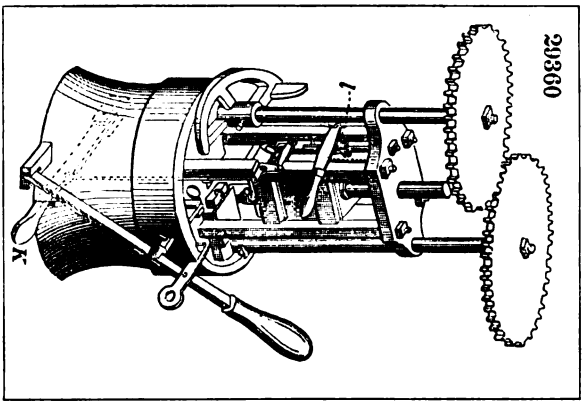

29361

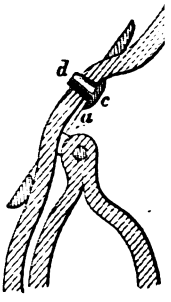

29364

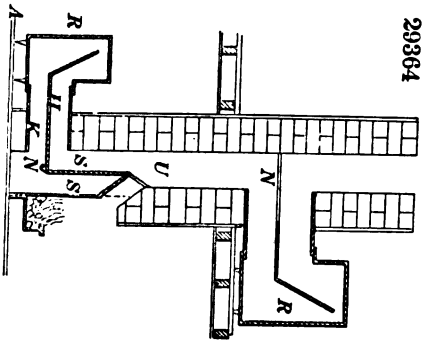

29362

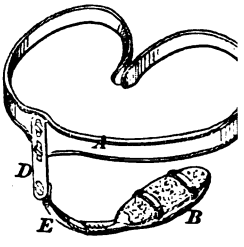

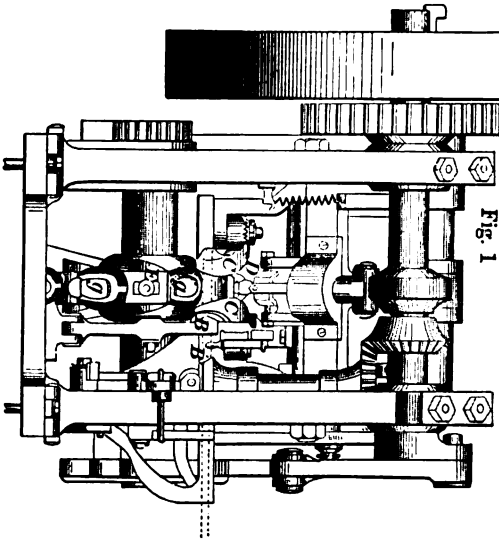

Fig. 1

Fig. 2

Fig. 3

29366

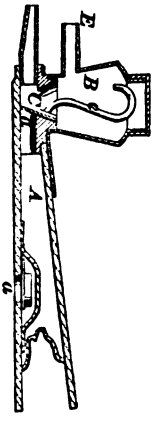

29367

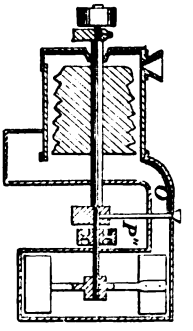

29368

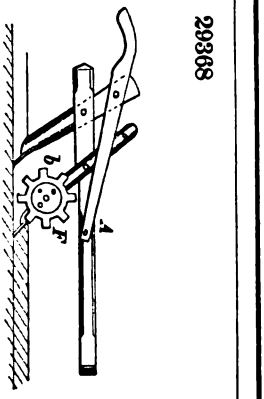

29369

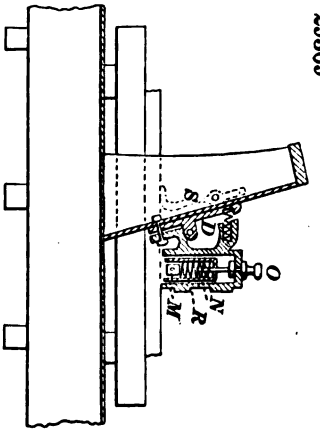

29370

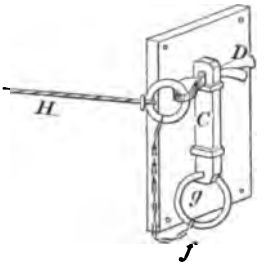

29371

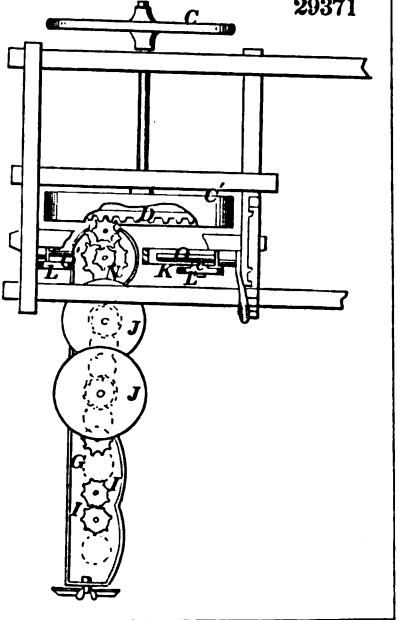

29372

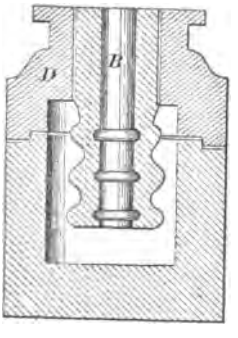

29373

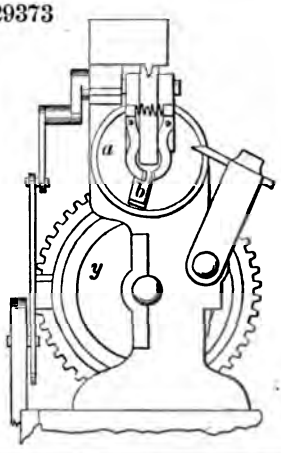

29374

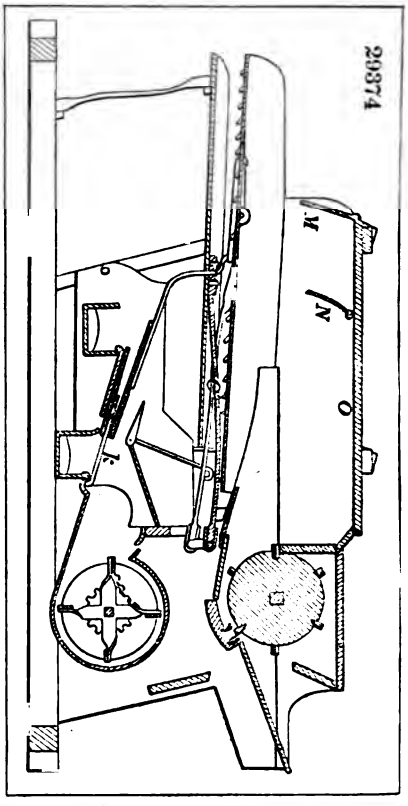

29376

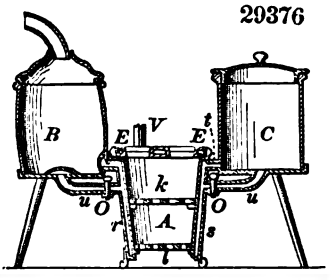

29377

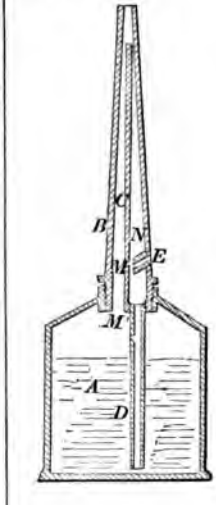

29375

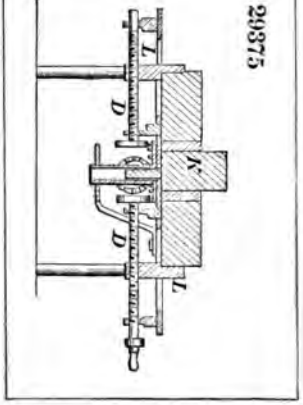

29378

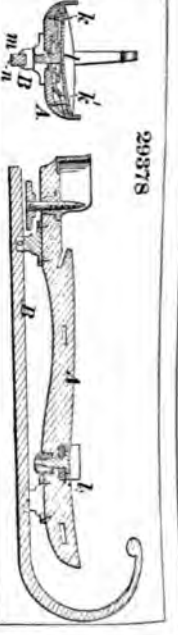

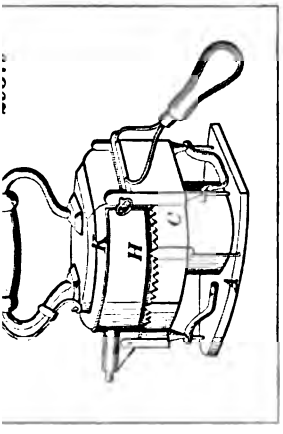

29380

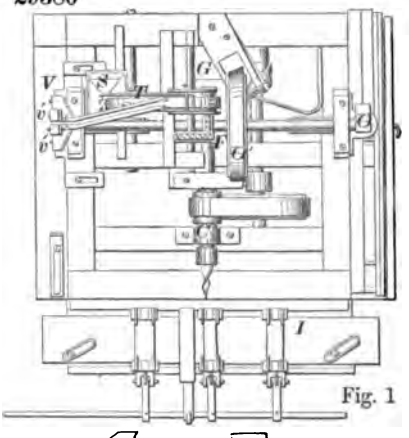

Fig. 1

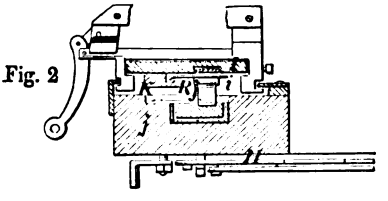

Fig. 2

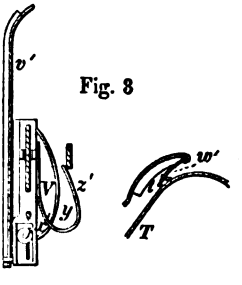

Fig. 3

29382

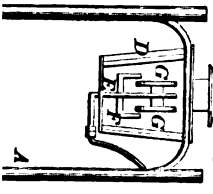

Fig. 1

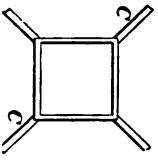

Fig. 2

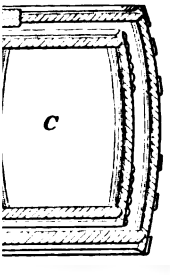

29381

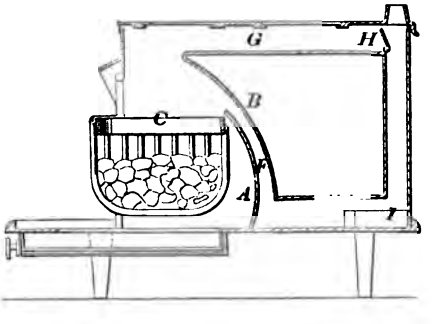

29384

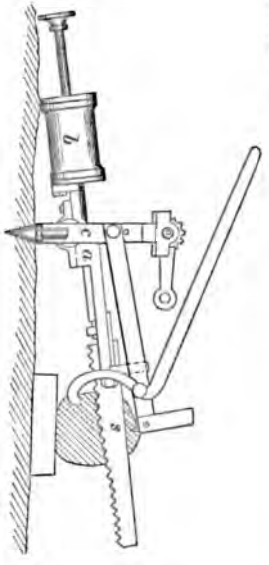

29385

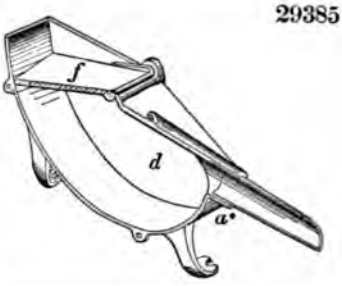

29386

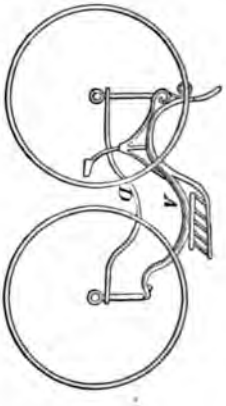

29387

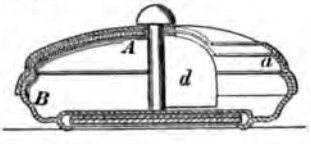

29388

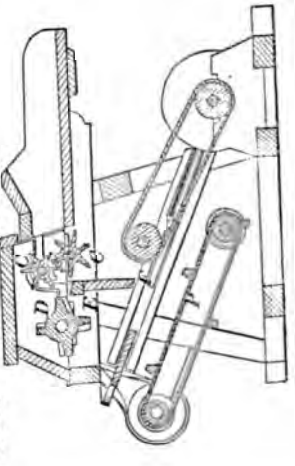

29389

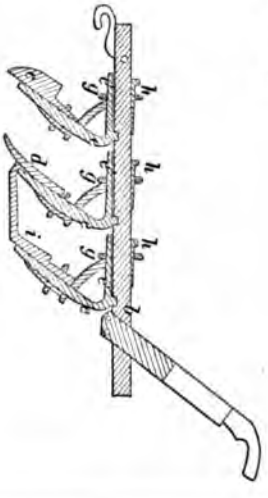

29390

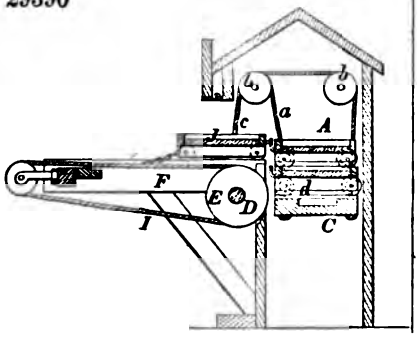

29391

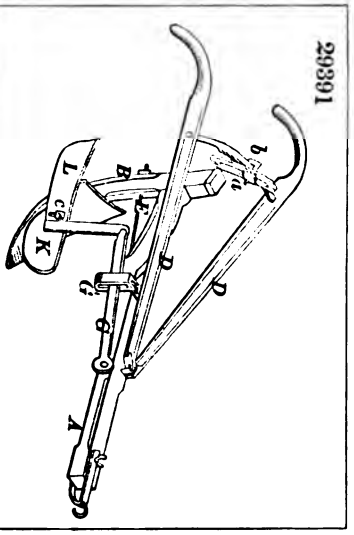

29393

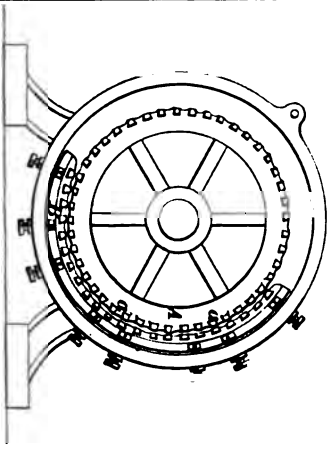

29394

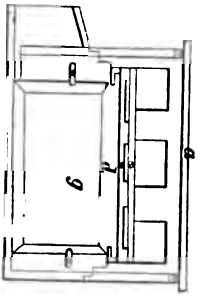

29396

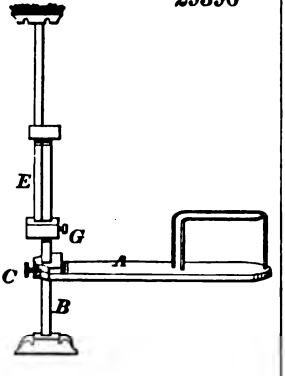

29397

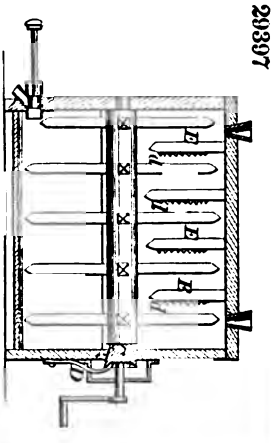

29398

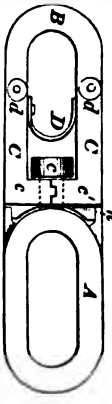

29398

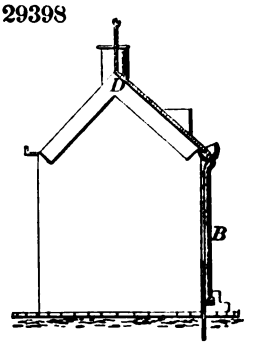

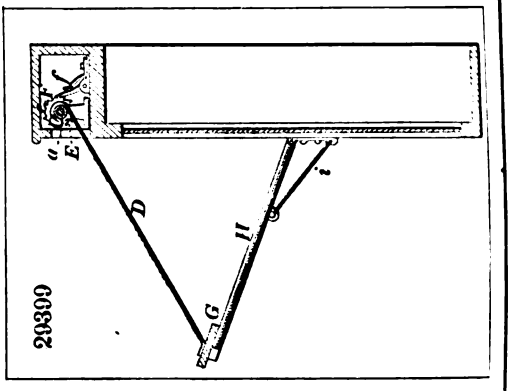

29399

29400

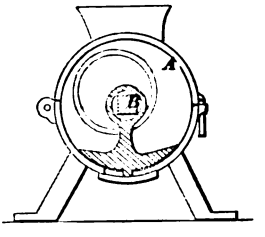

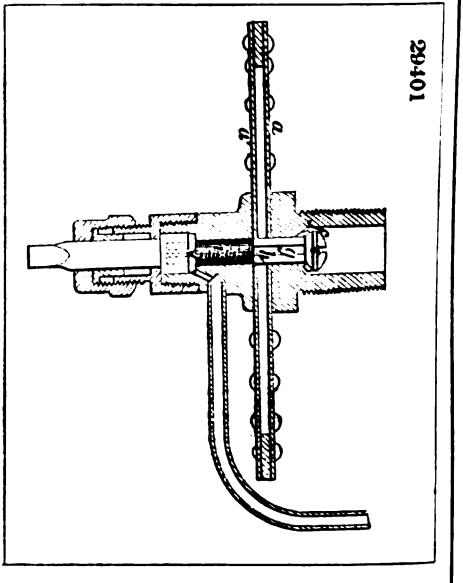

29401

29402

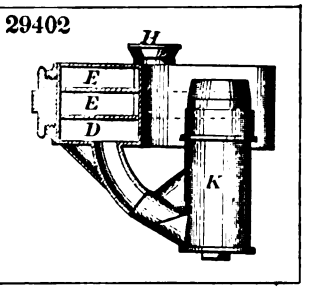

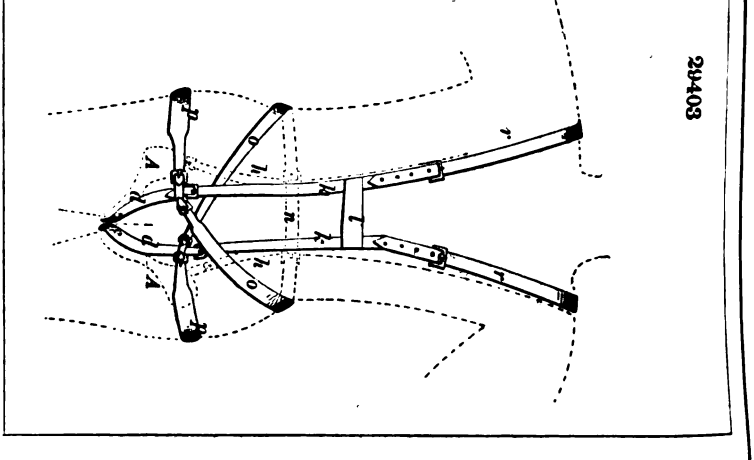

29403

29405

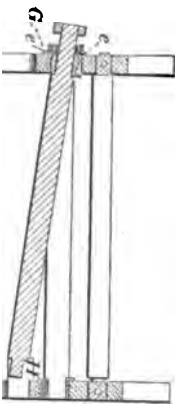

29406

Fig. 1

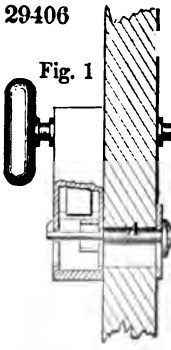

Fig. 2

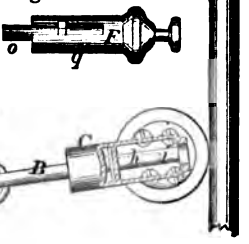

29408

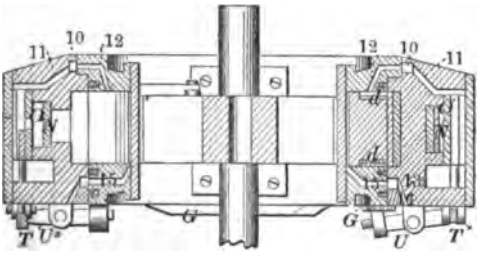

9410

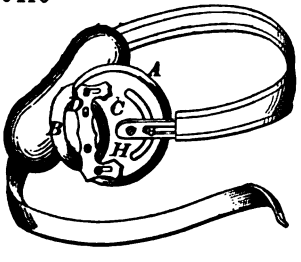

29409

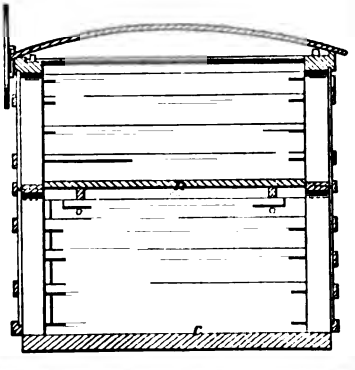

9407

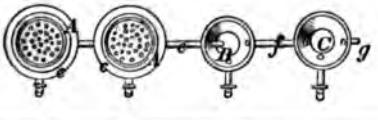

29411

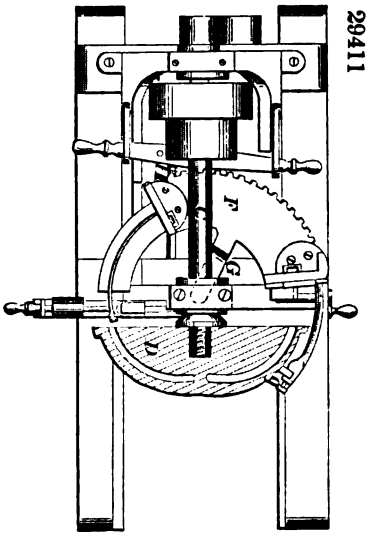

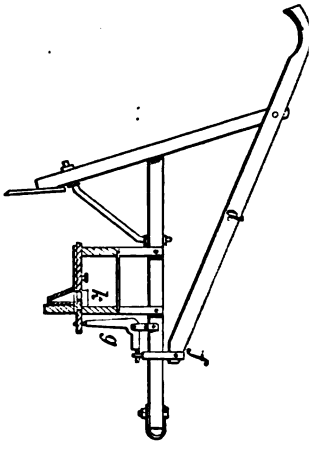

29414

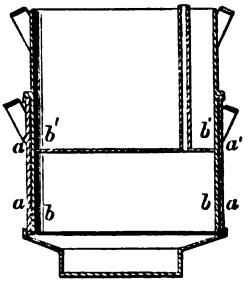

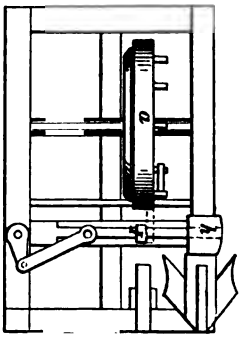

29415

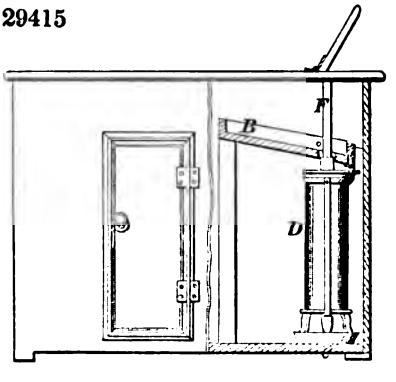

29416

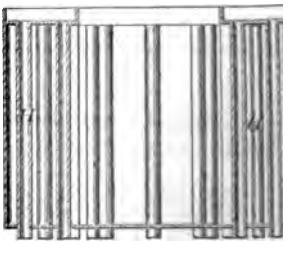

29417

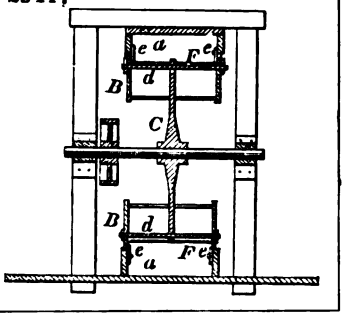

29418

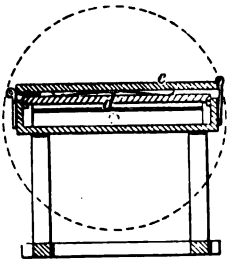

29420

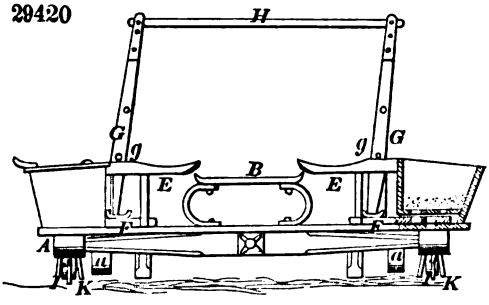

29419

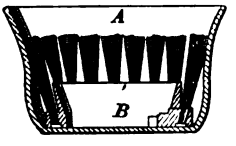

29421

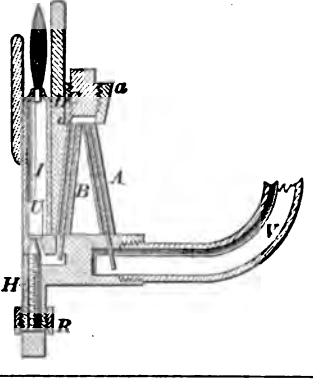

29422

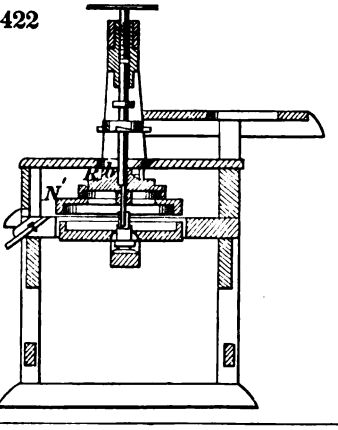

29424

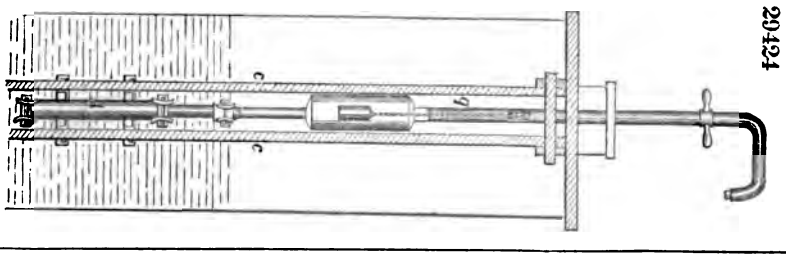

29425

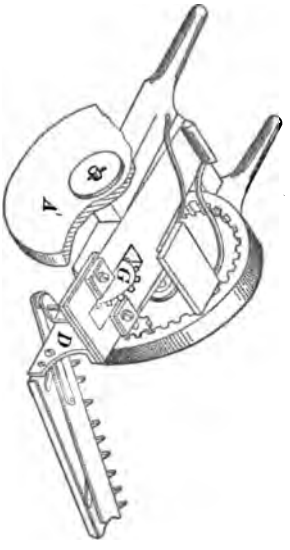

29427

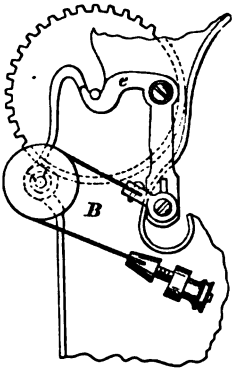

29426

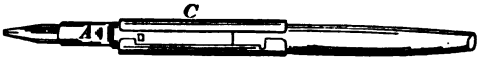

29428

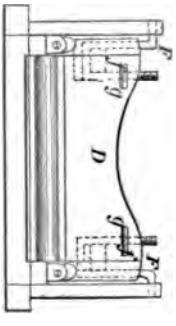

29429

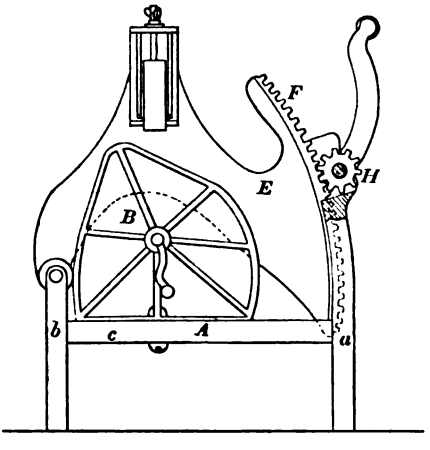

29430

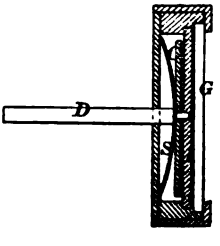

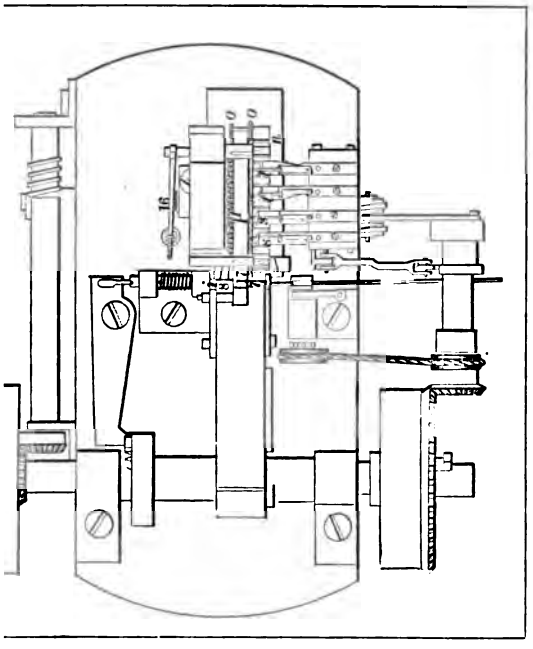

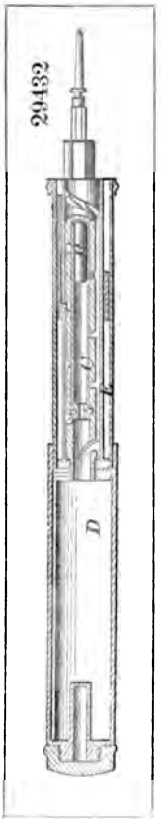

29433

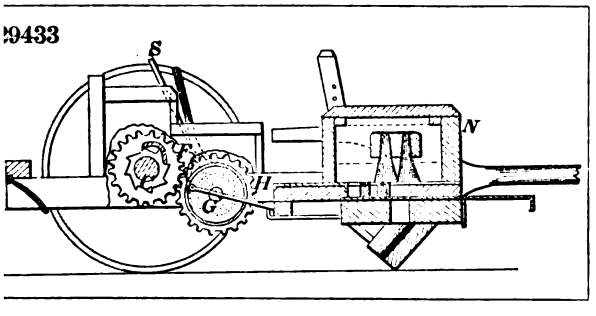

29434

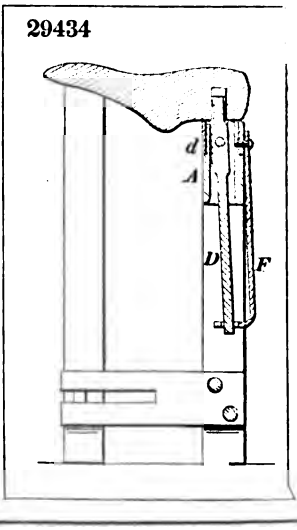

435

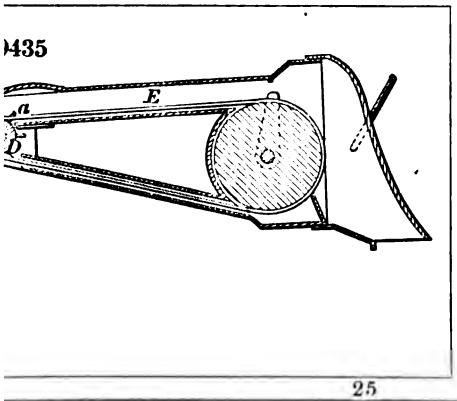

29436

29437

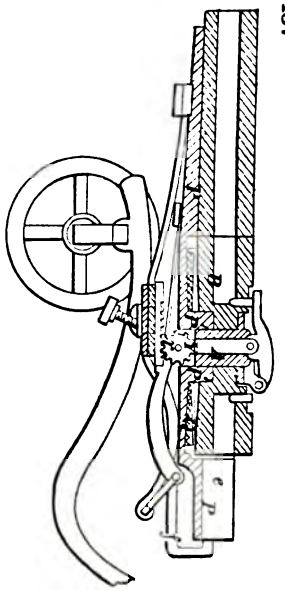

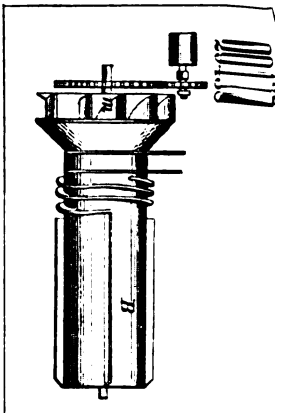

29439

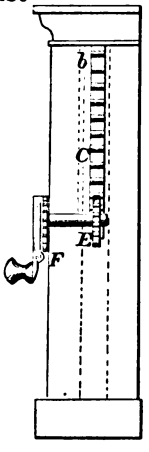

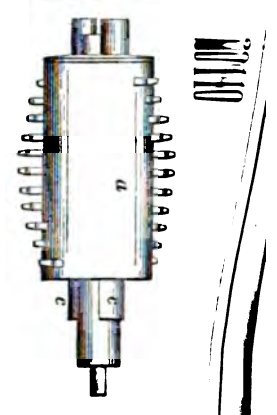

29443

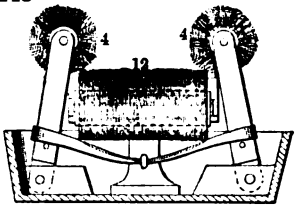

29442

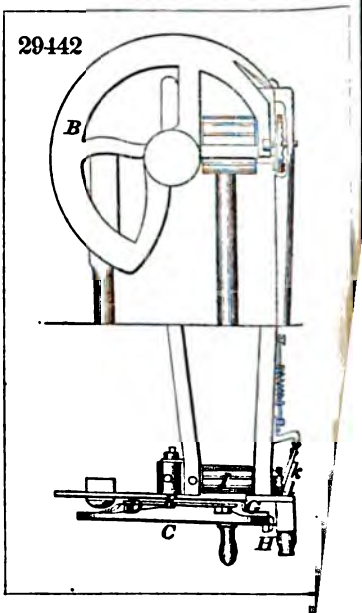

29441

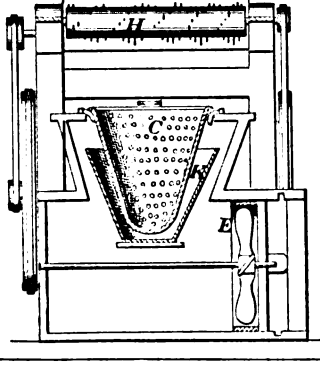

29444

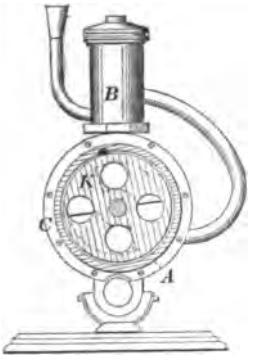

29445

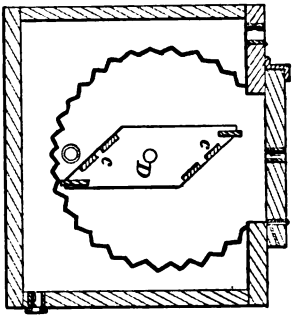

29446

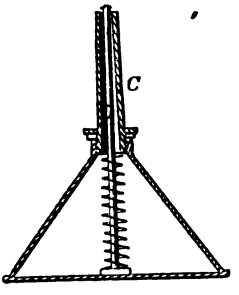

29447

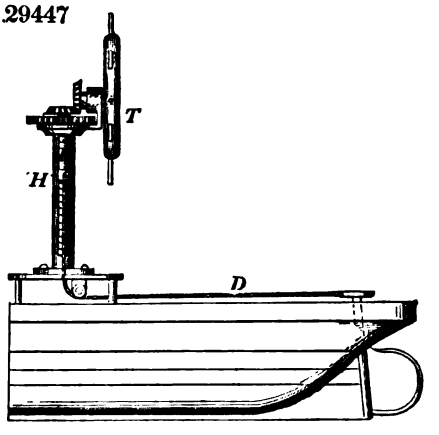

29448

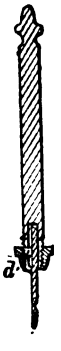

29449

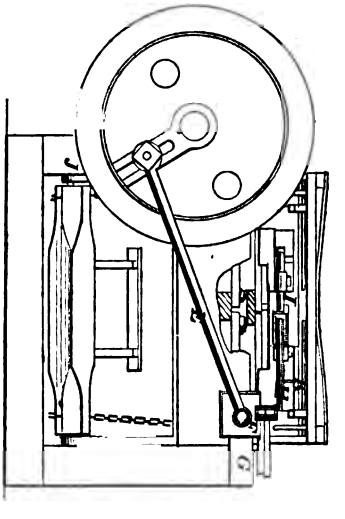

29450

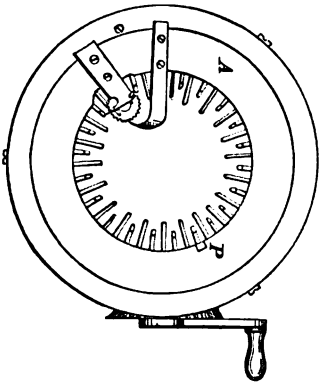

29451

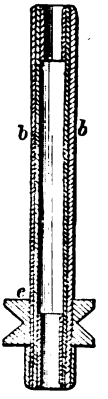

29452

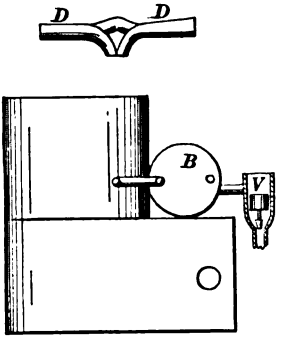

29453

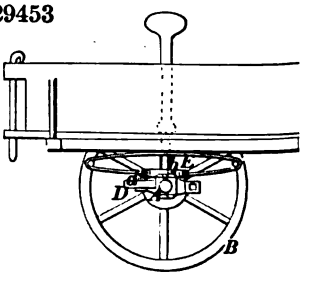

29454

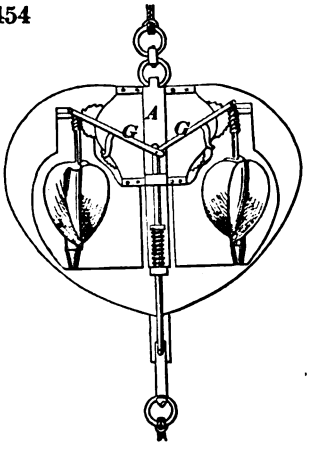

29455

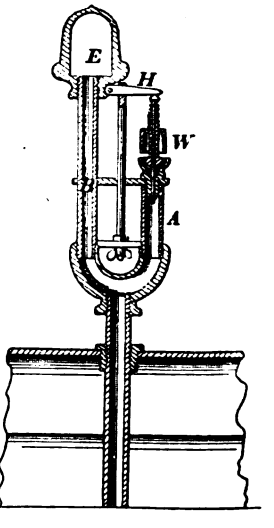

6

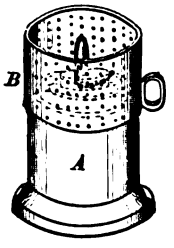

8

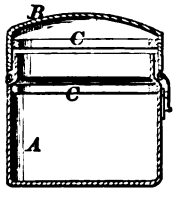

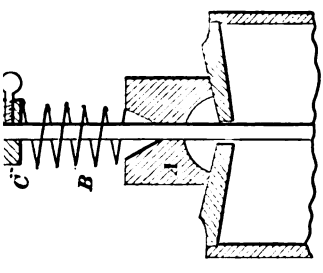

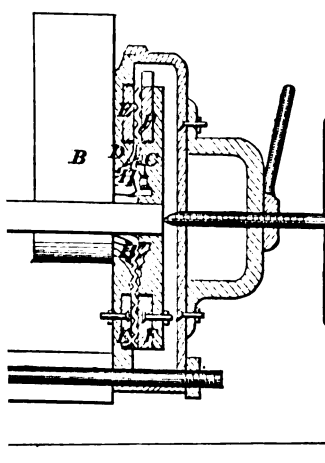

29457

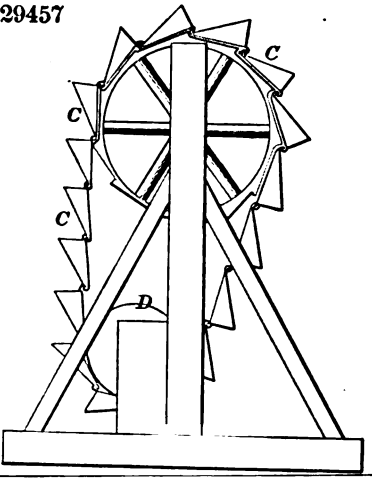

29459

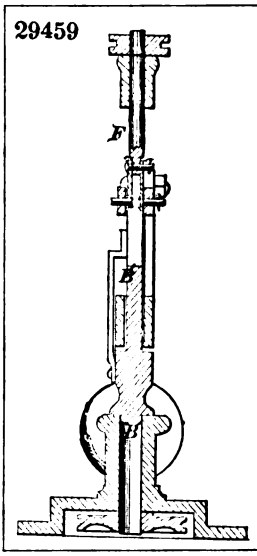

29461

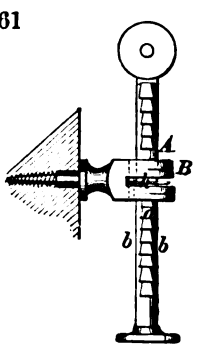

29463

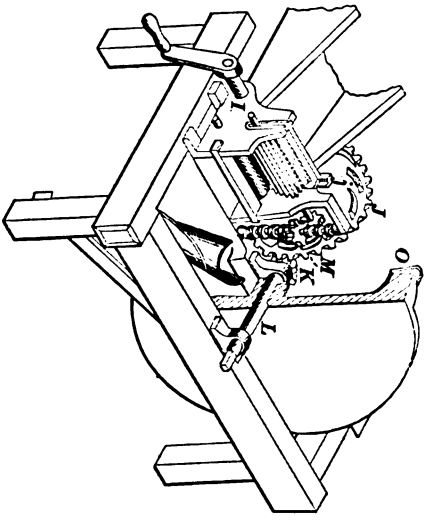

29465

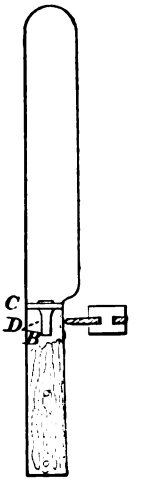

29464

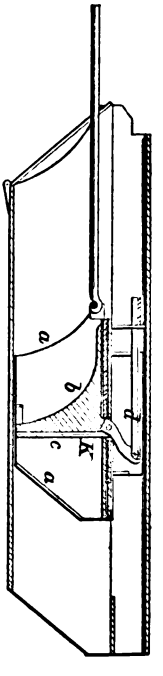

29466

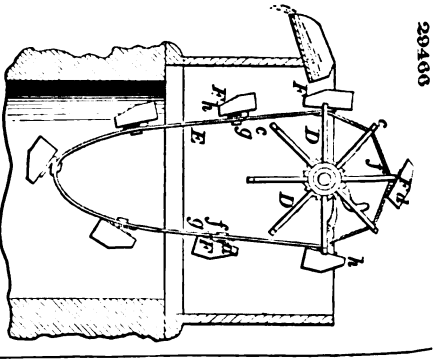

29467

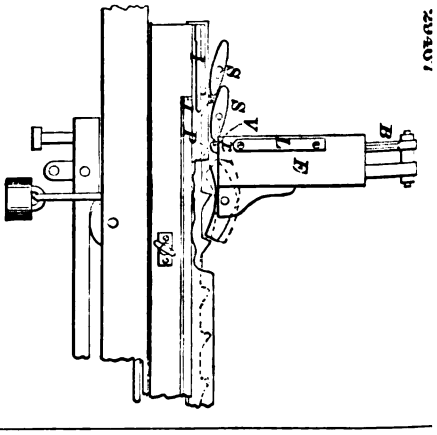

29468

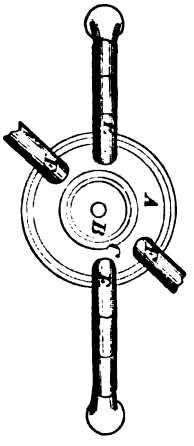

29469

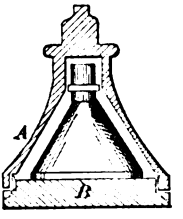

29470

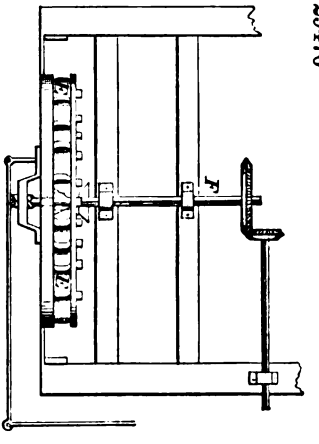

175

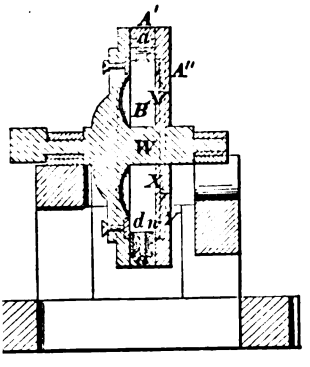

3

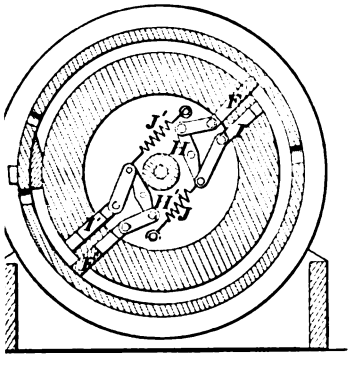

29472

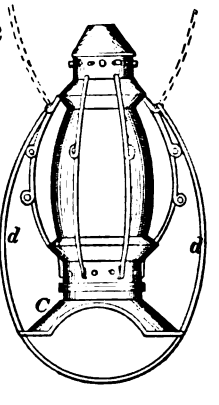

29476

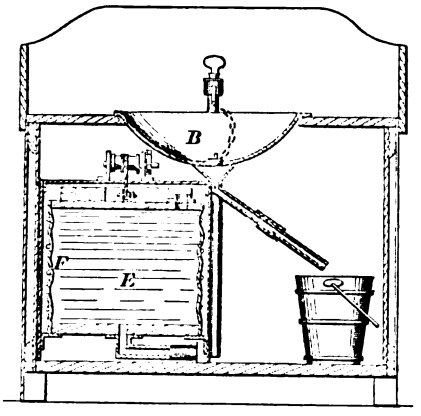

29477

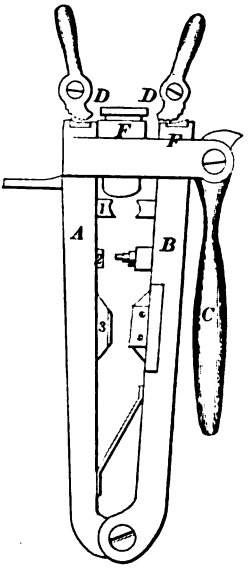

29478

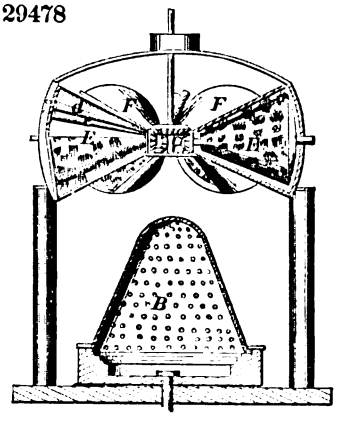

29479

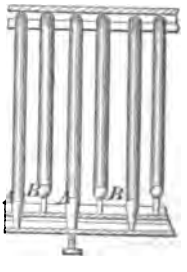

29480

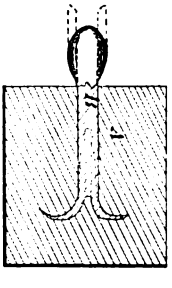

29481

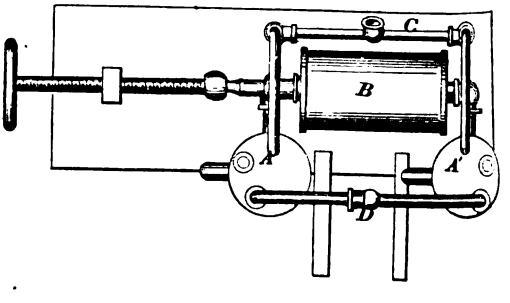

29482

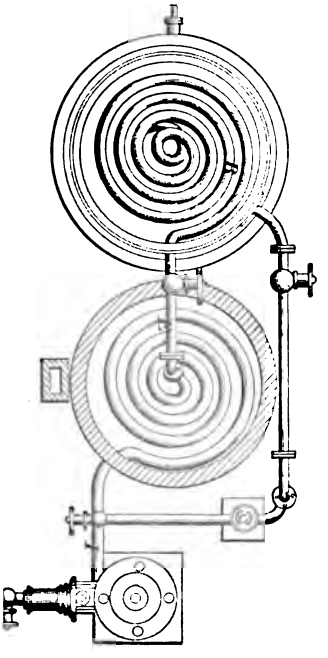

29483

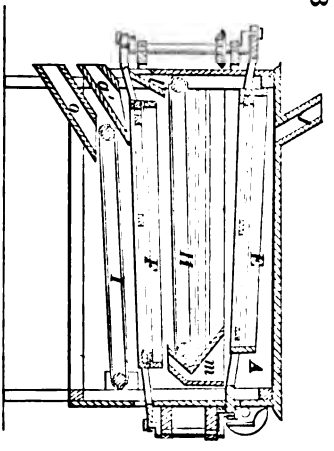

29484

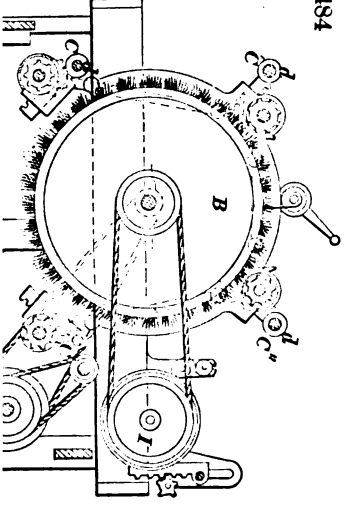

29485

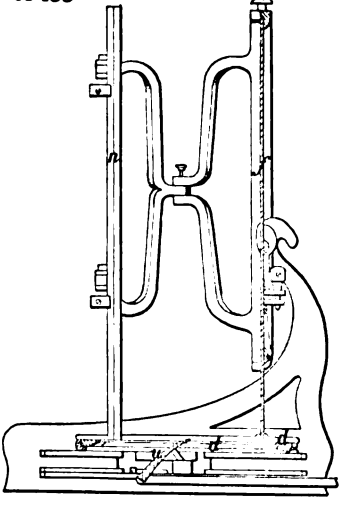

29486

29487

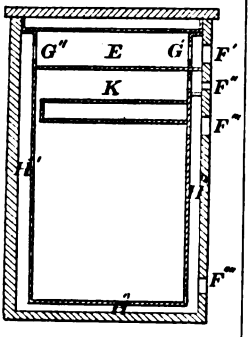

29490

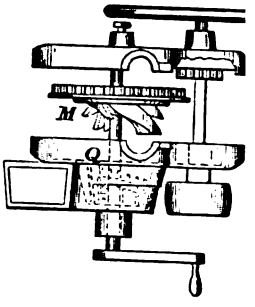

29491

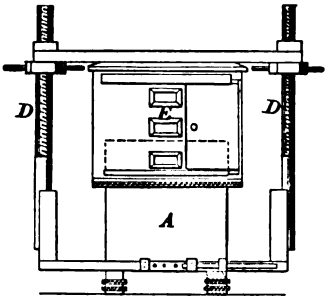

29492

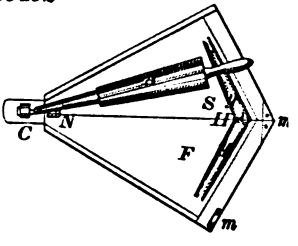

29493

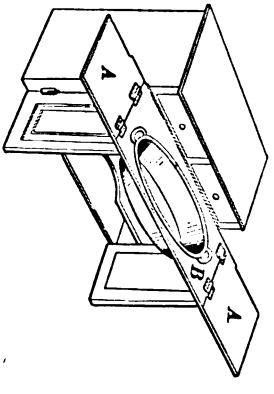

29494

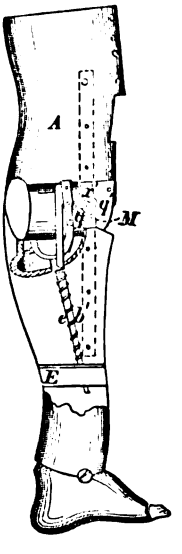

29495

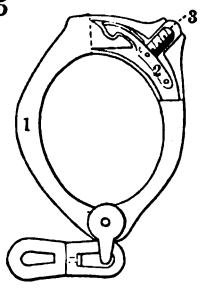

29497

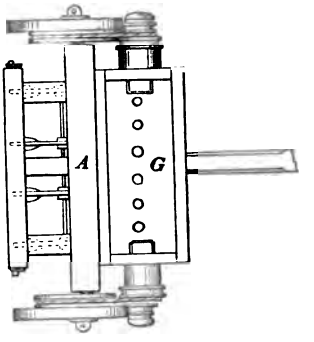

29496

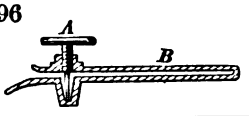

29498

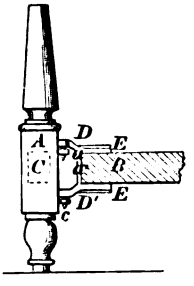

29499

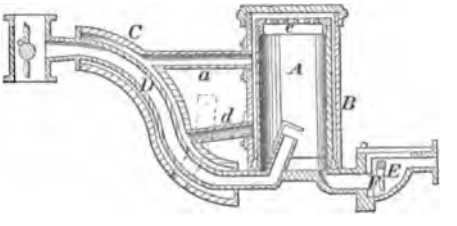

29500

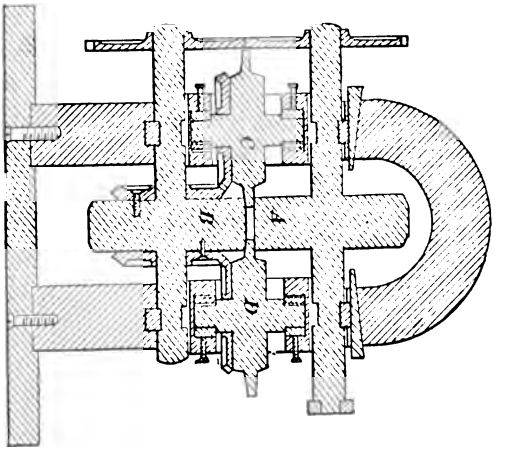

29501

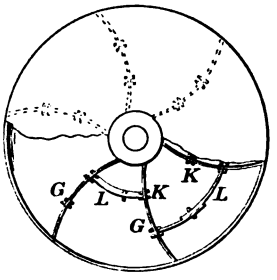

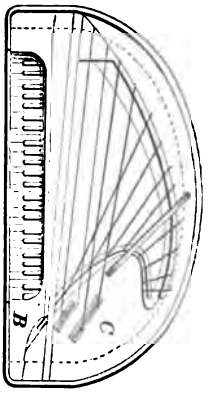

29503

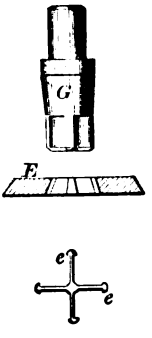

29504

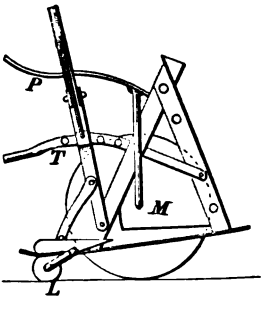

29505

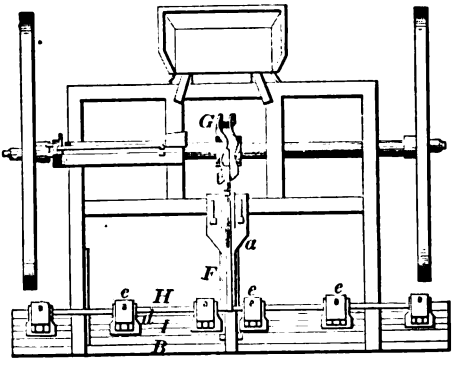

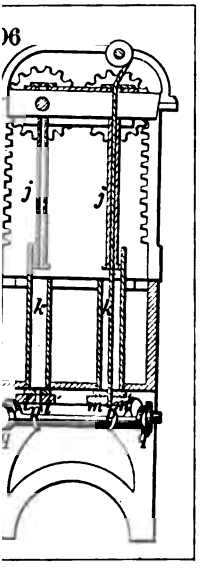

29510

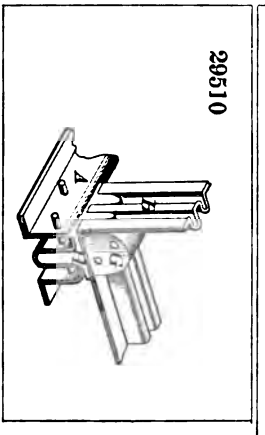

29507

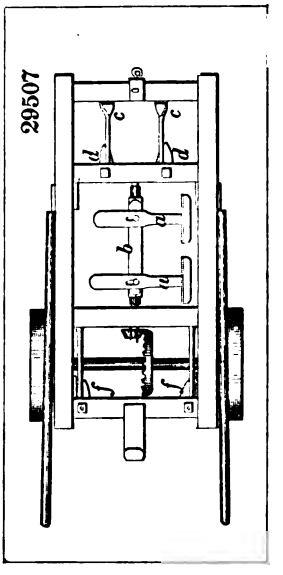

29508

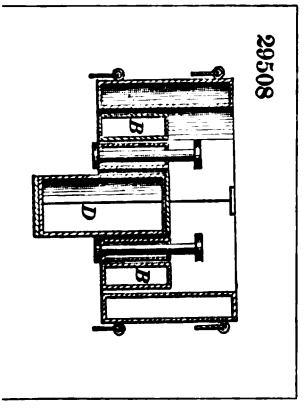

29509

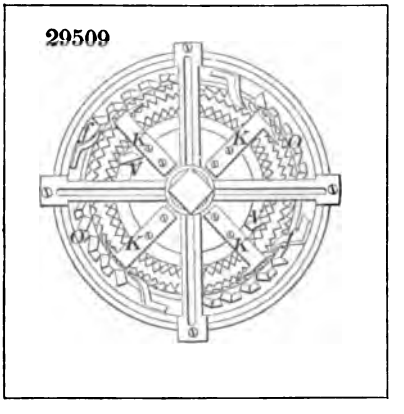

29511

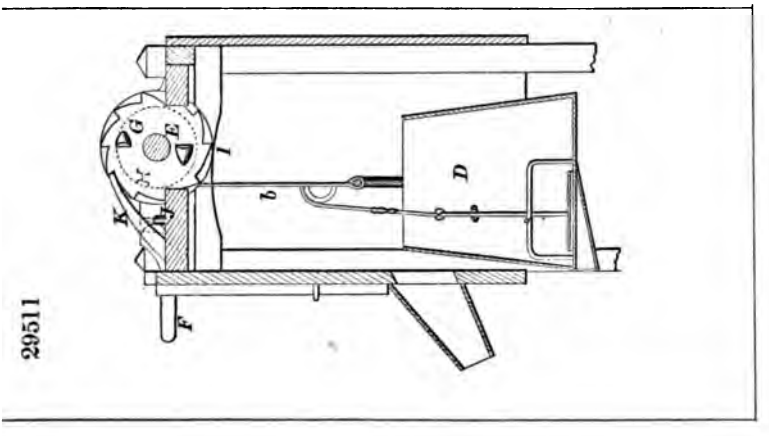

29512

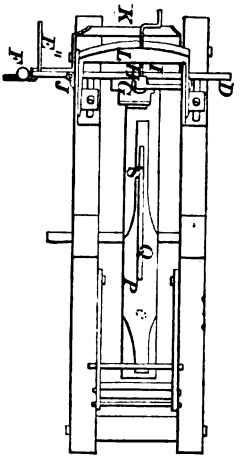

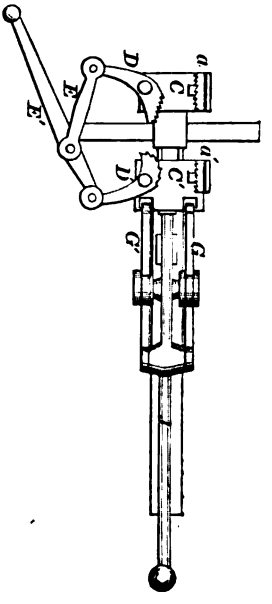

29514

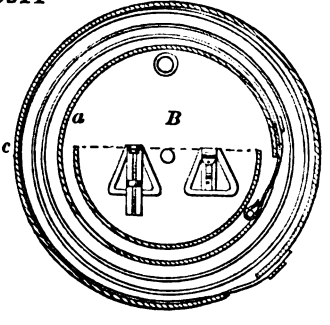

29515

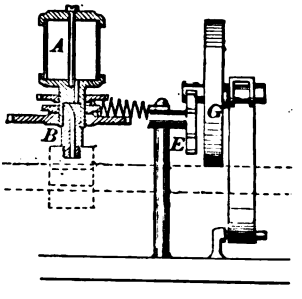

29516

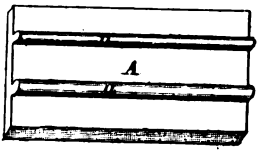

29517

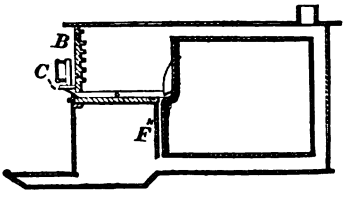

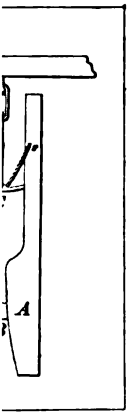

29519

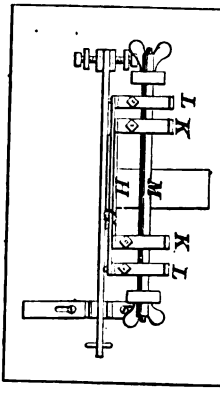

29522

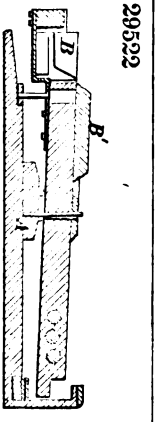

29520

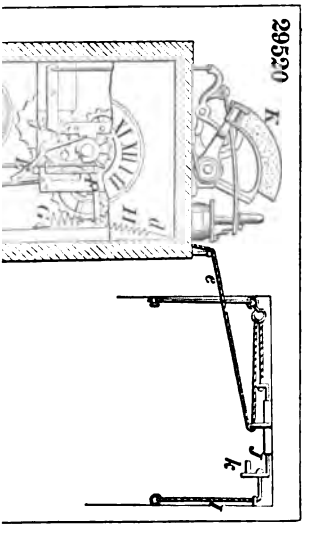

29521

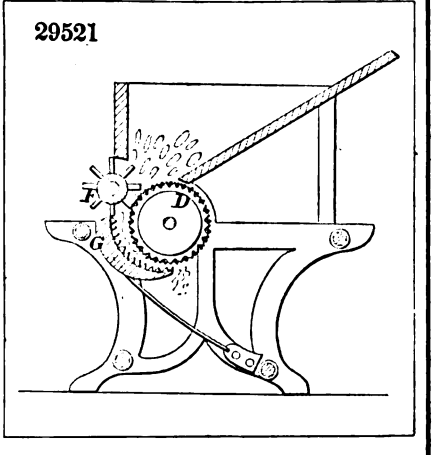

29523

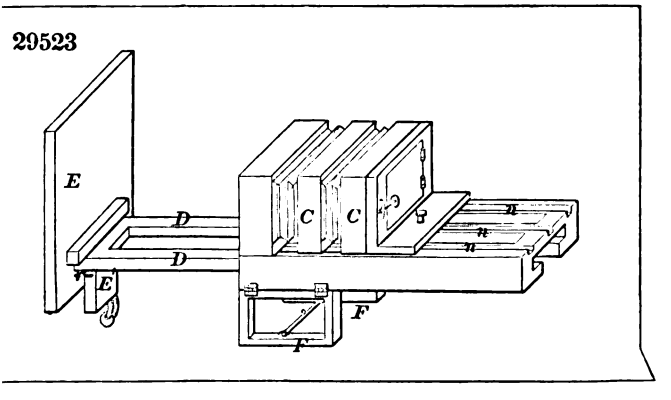

29524

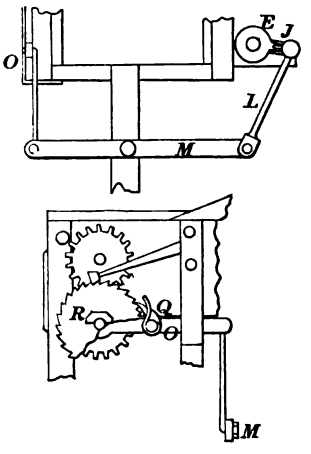

29526

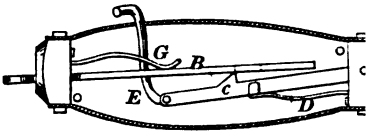

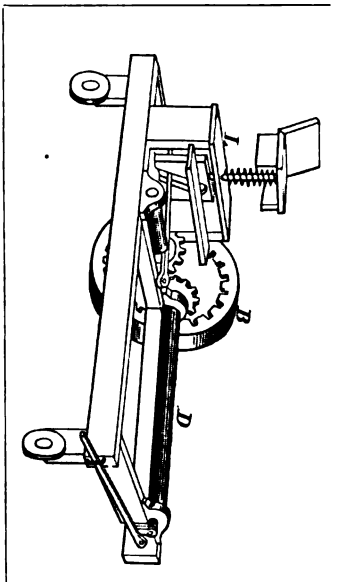

29527

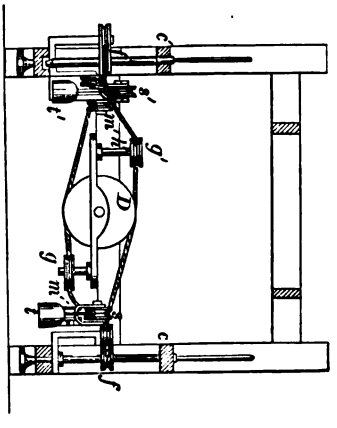

29529

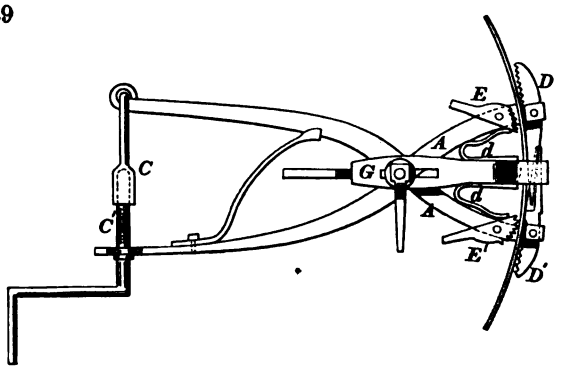

29530

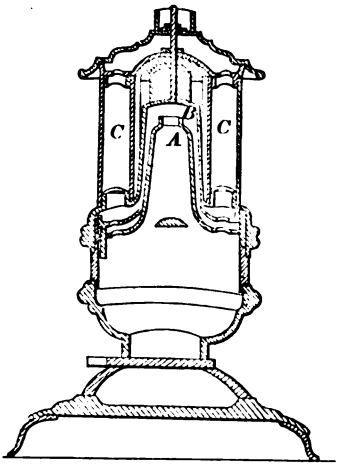

29531

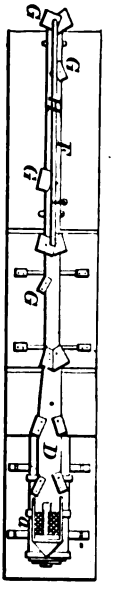

29533

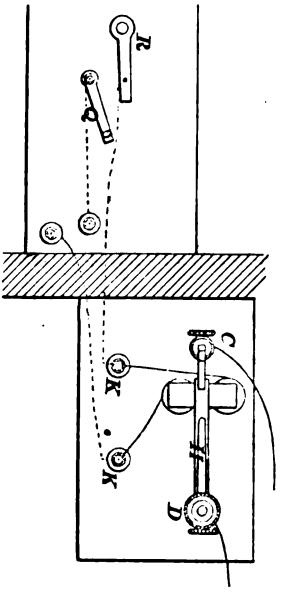

29532

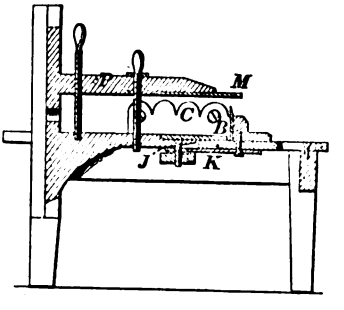

29534

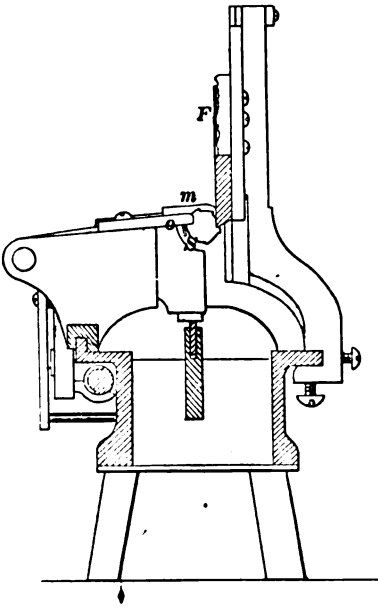

29535

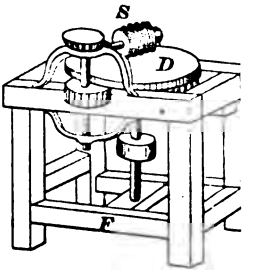

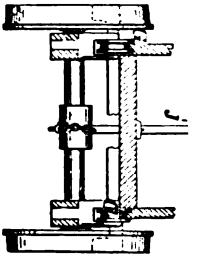

29537

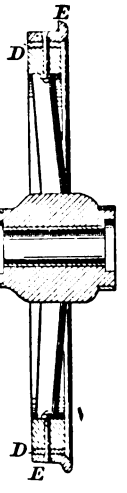

29538

29539

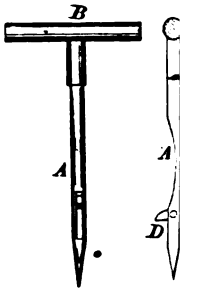

29540

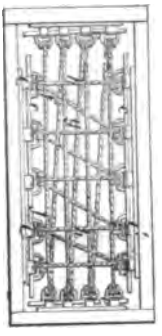

29541

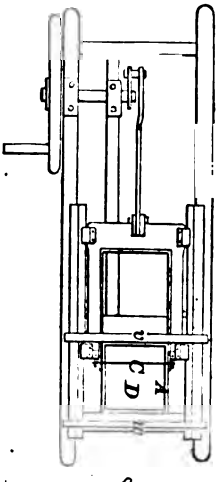

Fig. 1

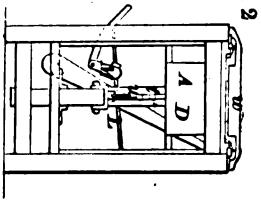

Fig. 2

29543

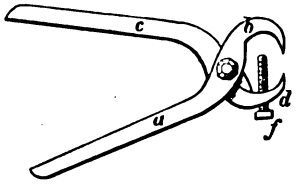

29542

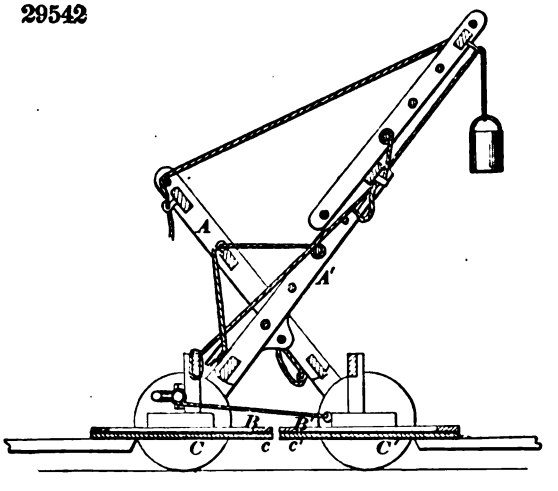

29544

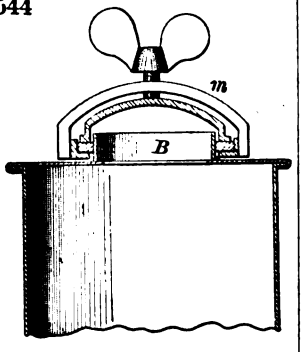

29545

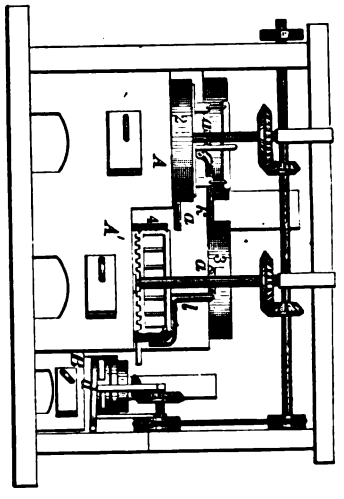

29546

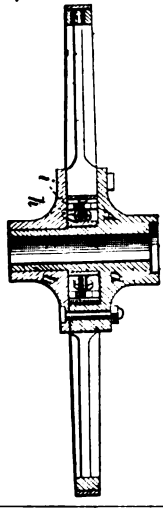

29547

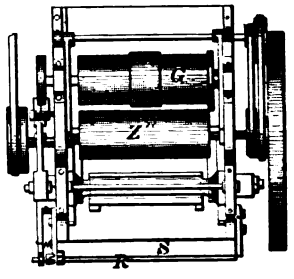

29548

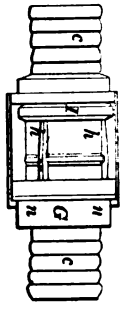

29549

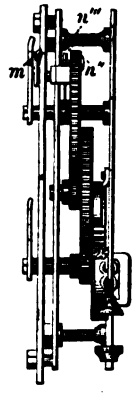

29550

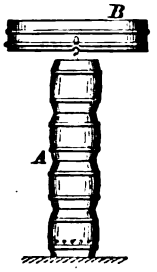

29551

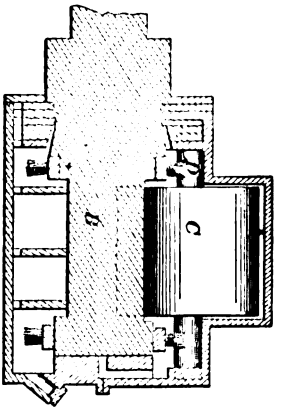

29553

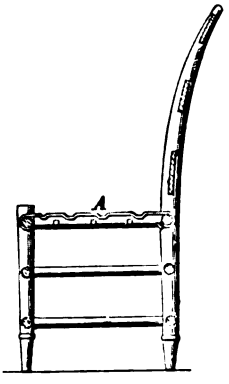

29554

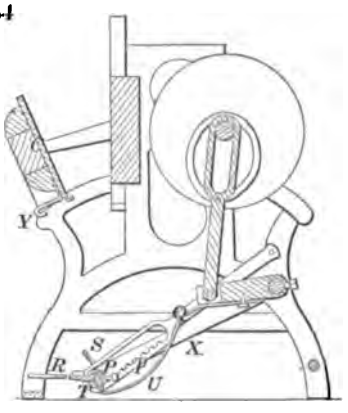

29555

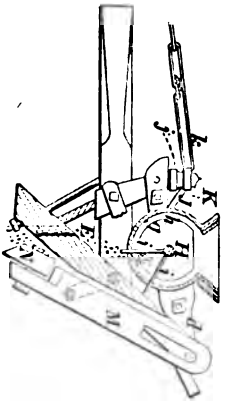

29556

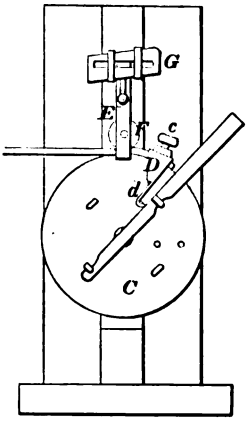

29557

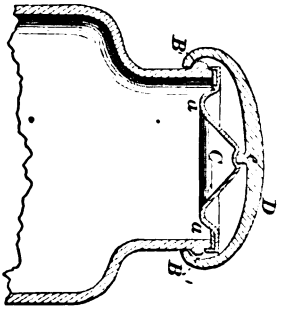

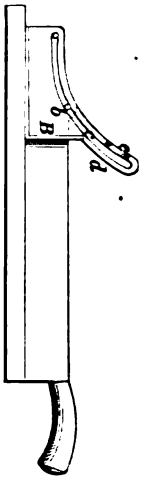

29559

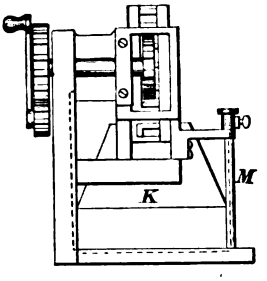

29561

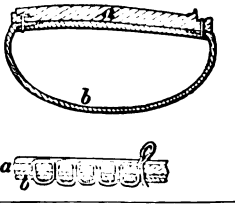

29562

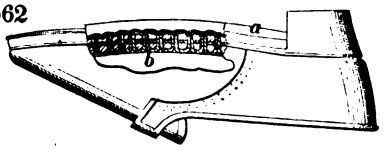

29563

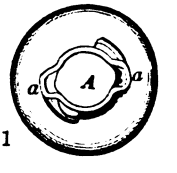

Fig. 1

Fig. 2

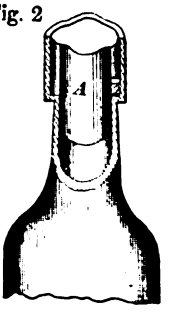

29564

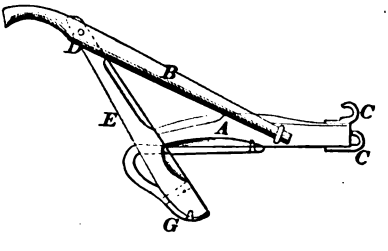

29565

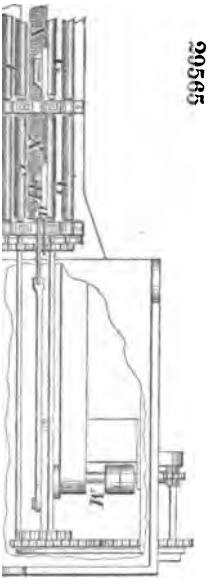

29566

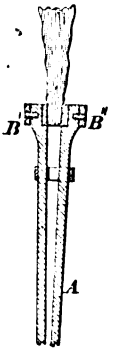

29567

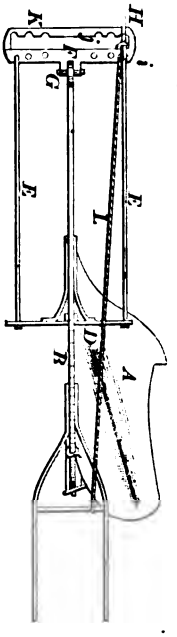

9568

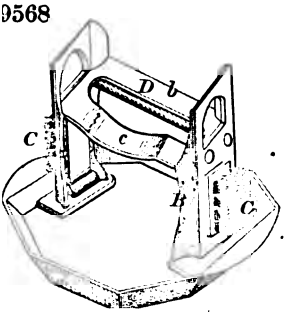

29569

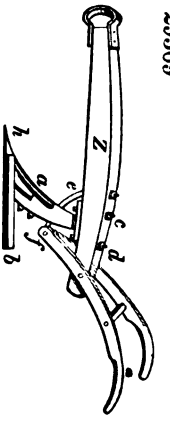

29570

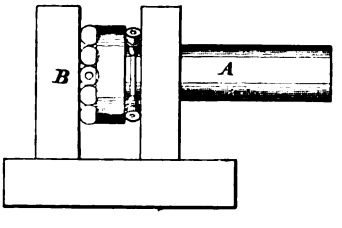

29571

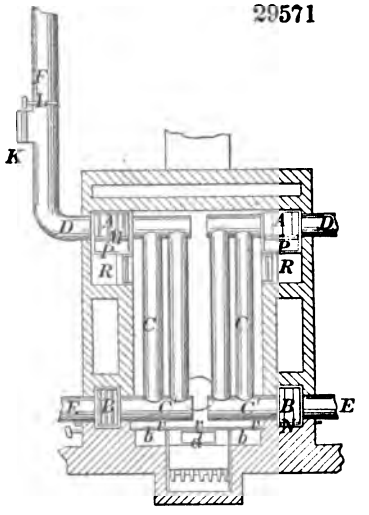

29572

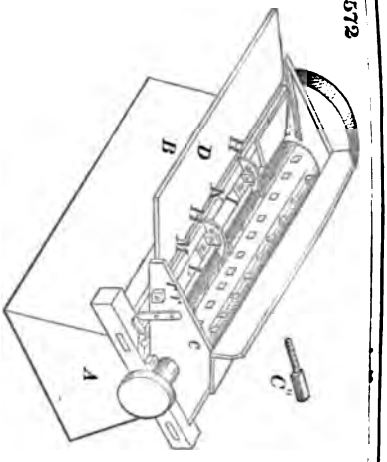

29574

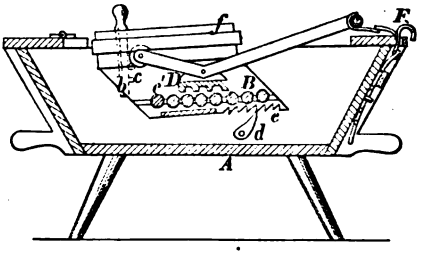

29576

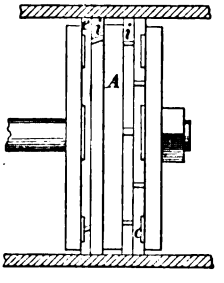

29573

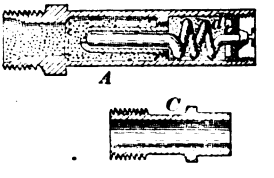

29575

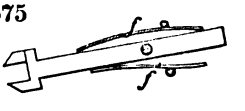

29577

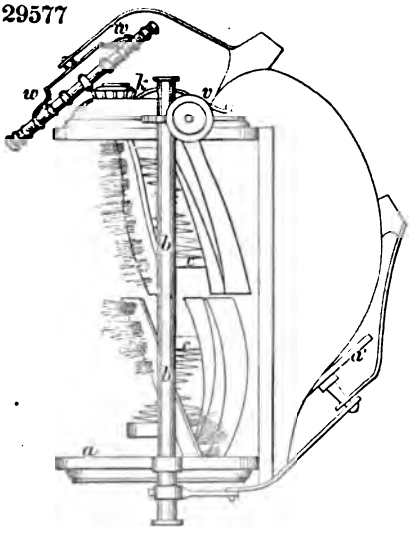

29578

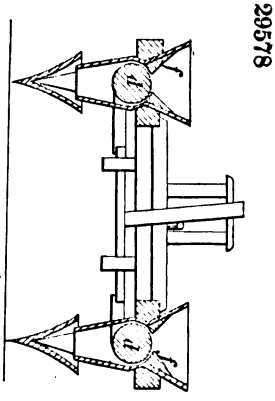

29581

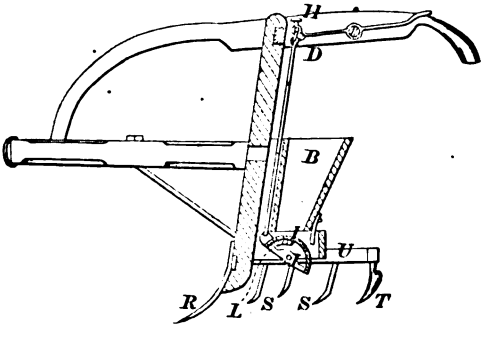

29580

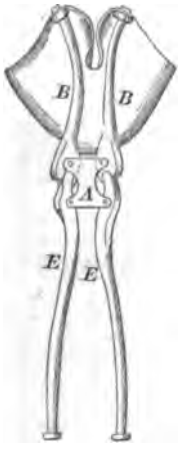

29579

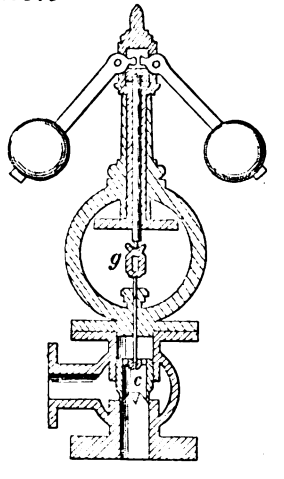

29582

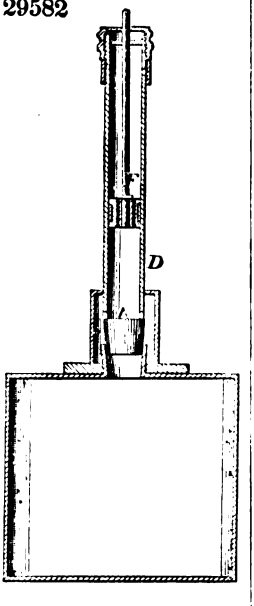

29587

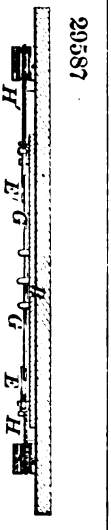

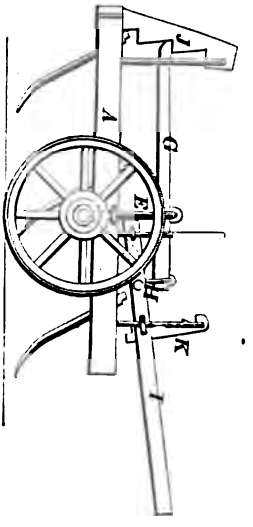

29584

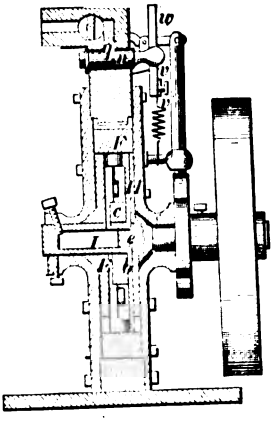

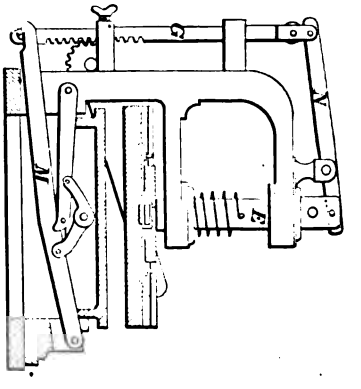

29586

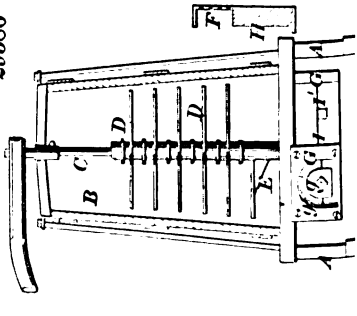

29588

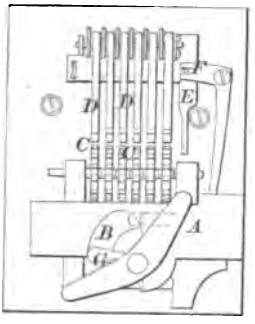

29589

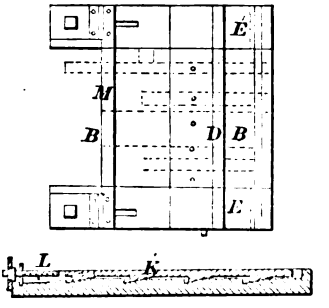

29590

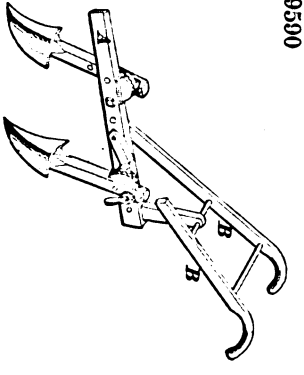

29591

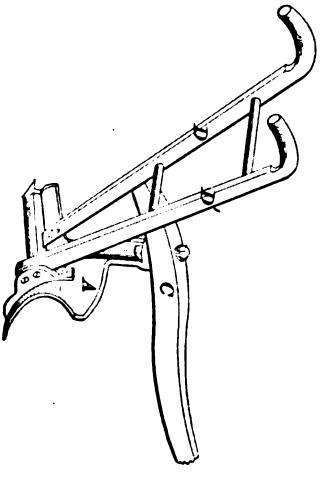

29592

29593

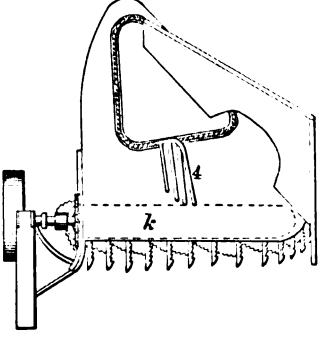

29594

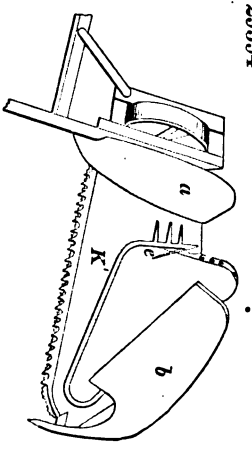

29595

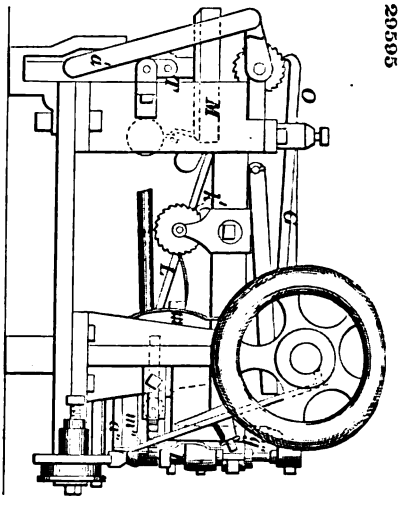

29597

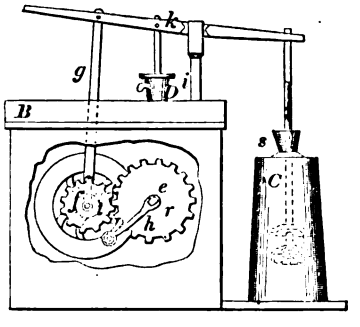

29598

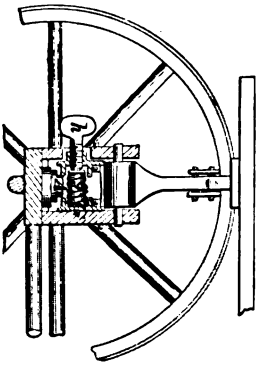

29599

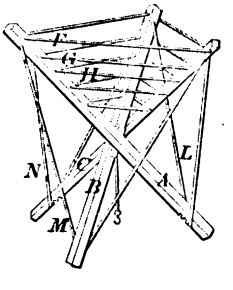

29600

29601

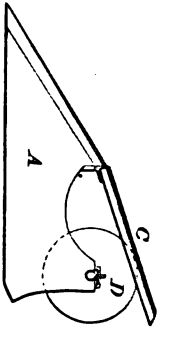

29602

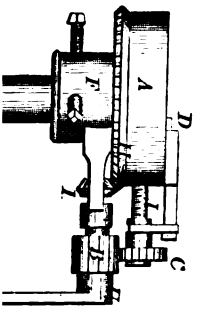

29603

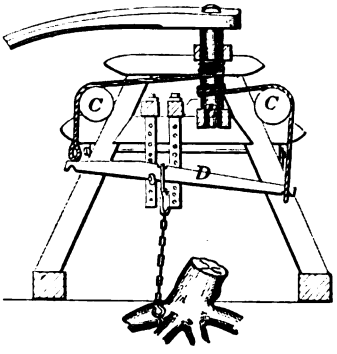

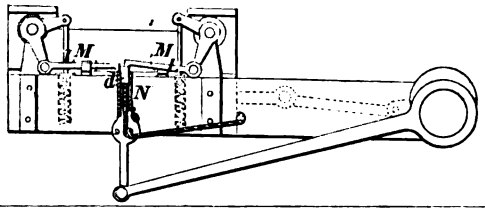

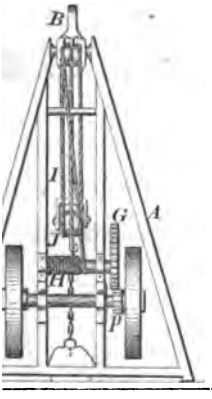

29605

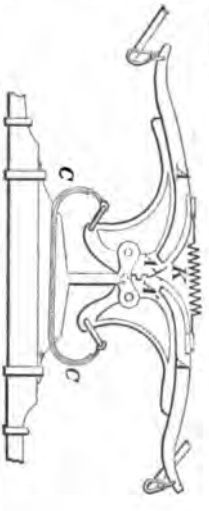

29607

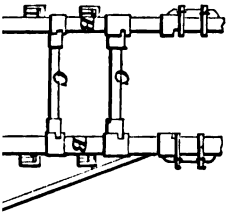

29608

Fig. 1

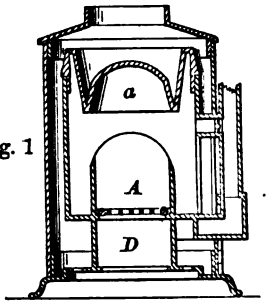

Fig. 2

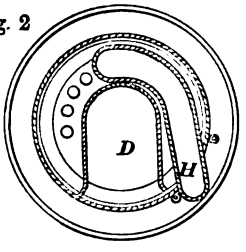

29609

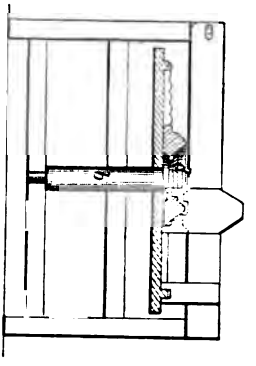

29611

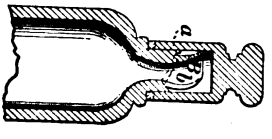

29612

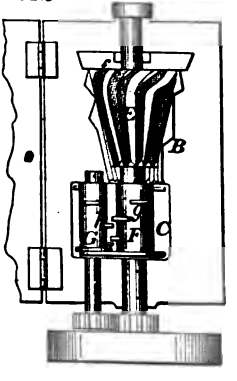

29610

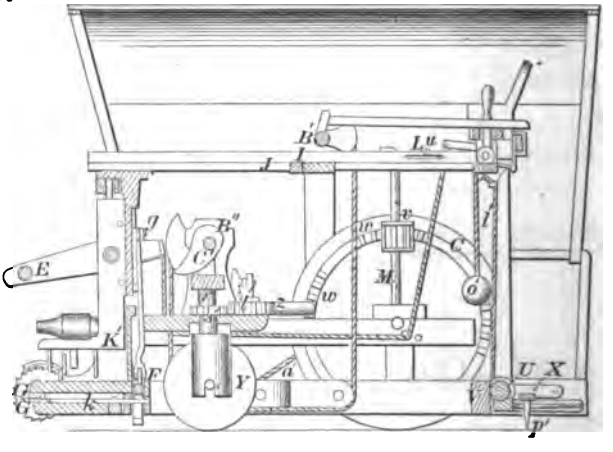

29613

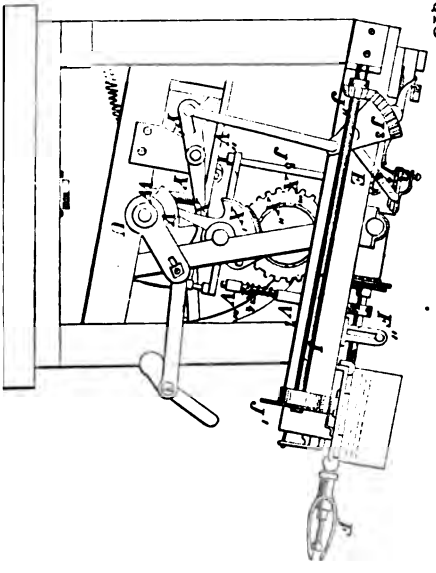

29614

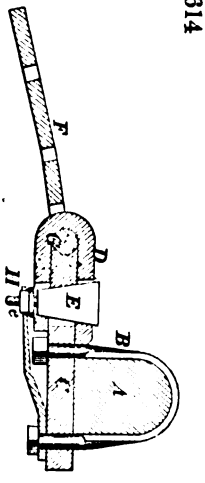

29617

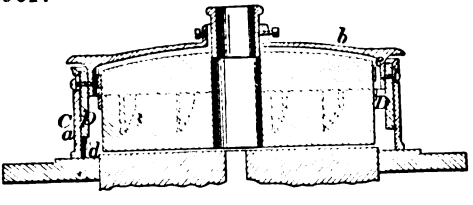

29615

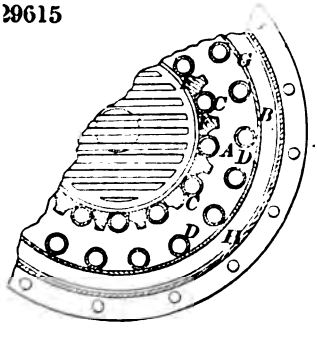

29616

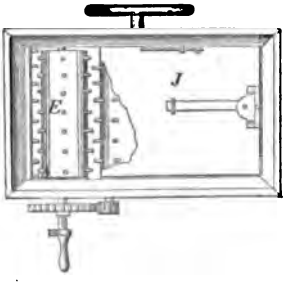

29618

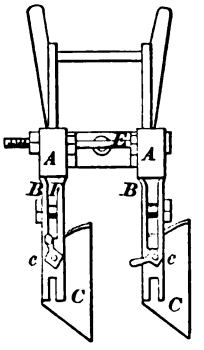

29619

29620

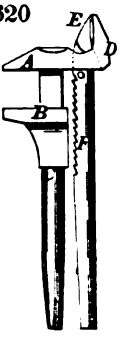

29622

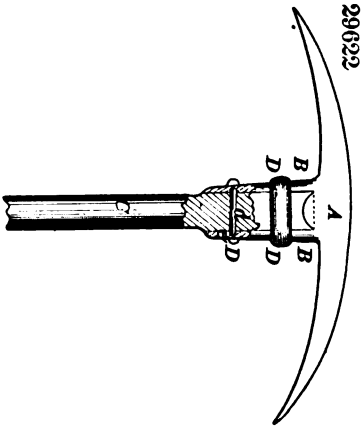

29621

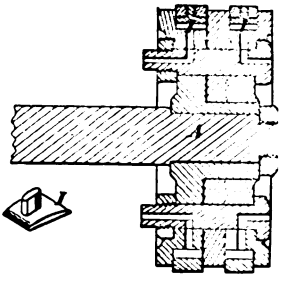

29623

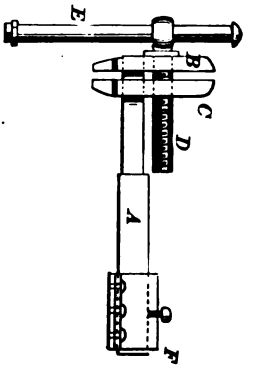

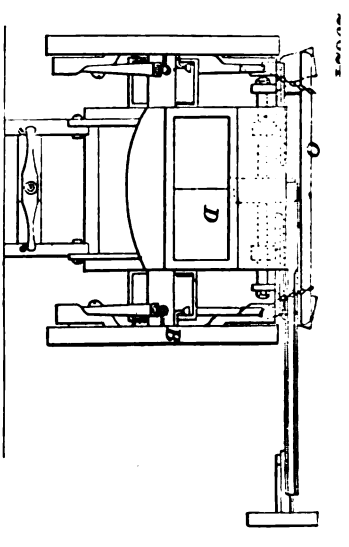

29625

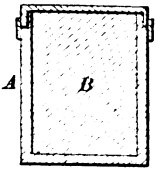

29626

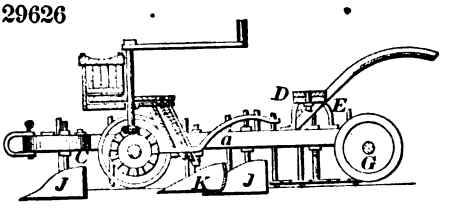

29627

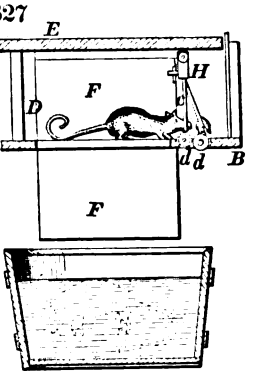

29628

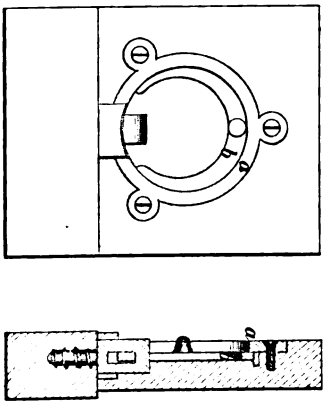

29631

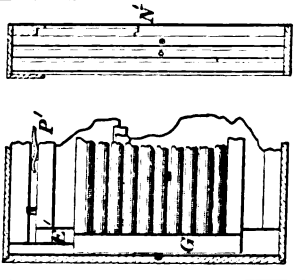

29629

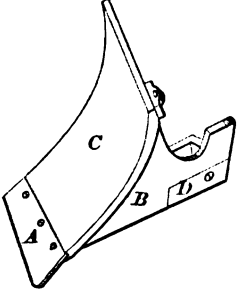

29630

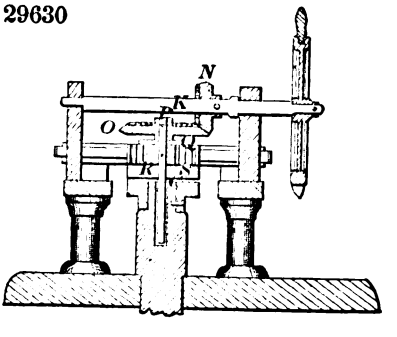

29632

Fig. 1

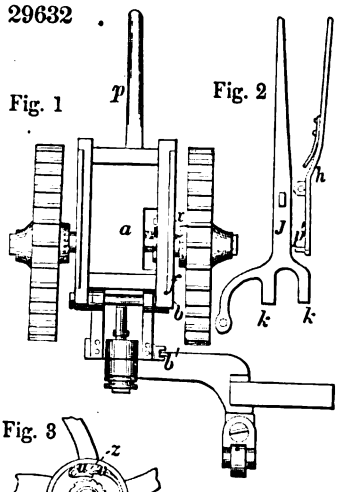

Fig. 2

Fig. 3

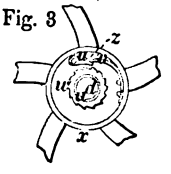

29633

Fig. 1

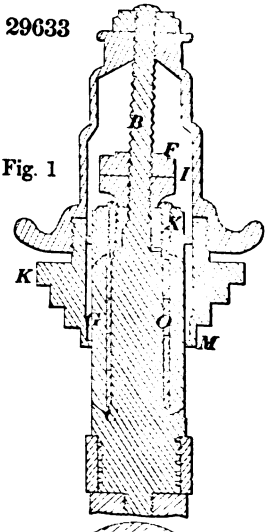

Fig. 2

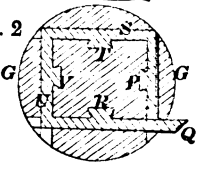

29634

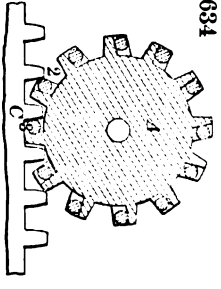

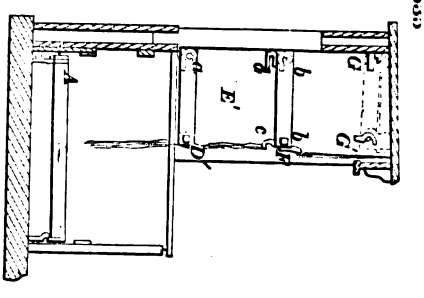

29636

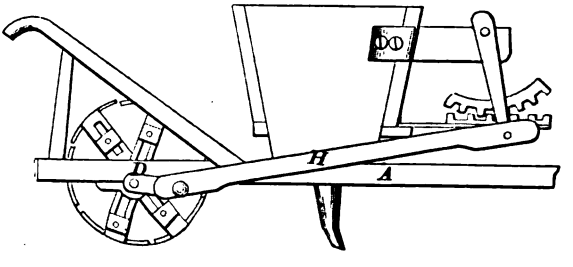

29637

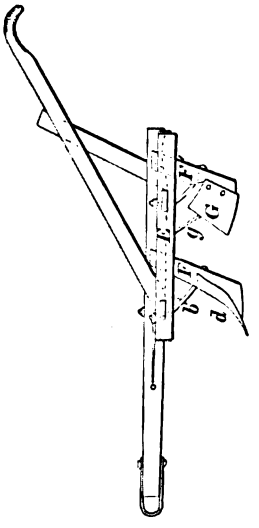

29638

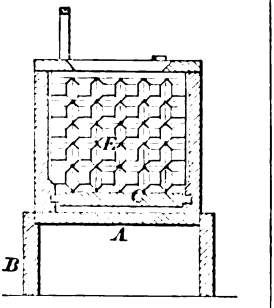

29639

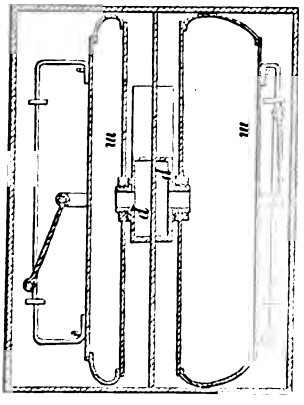

29640

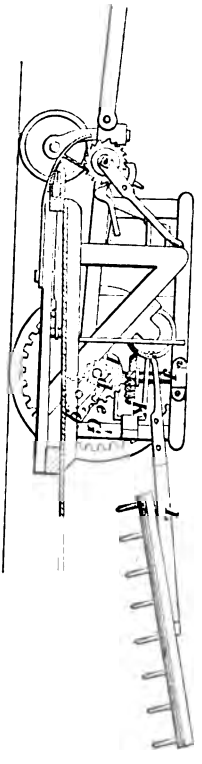

29641

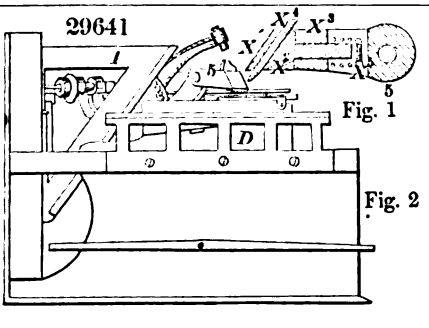

Fig. 1

Fig. 2

29642

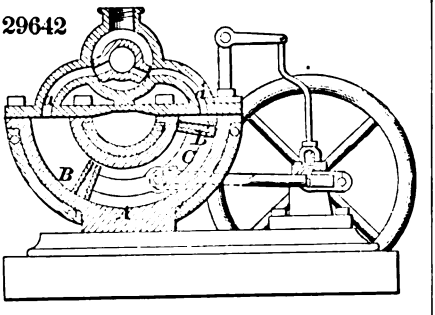

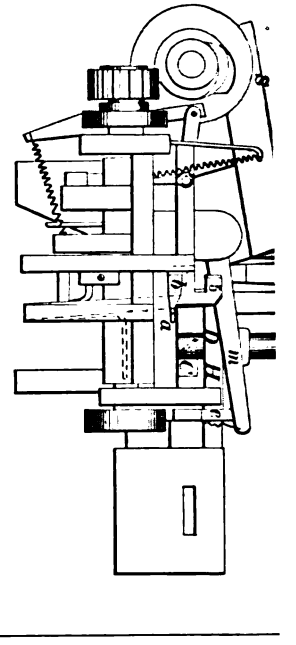

29643

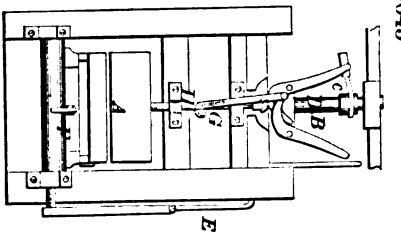

29644

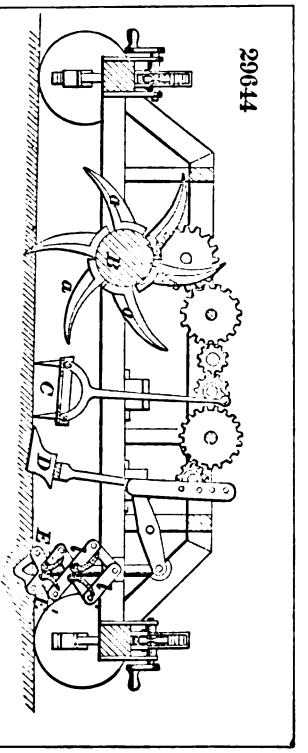

29646

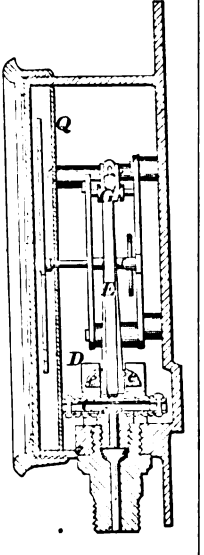

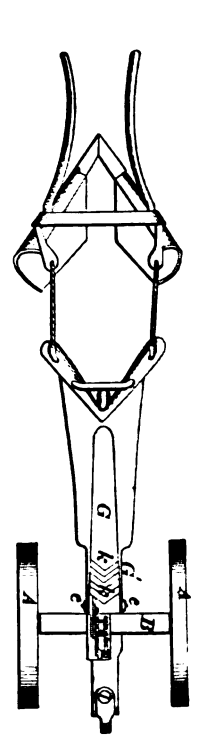

29648

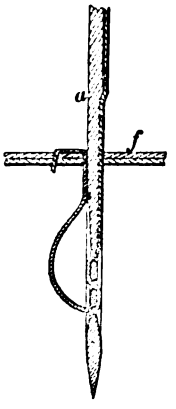

29649

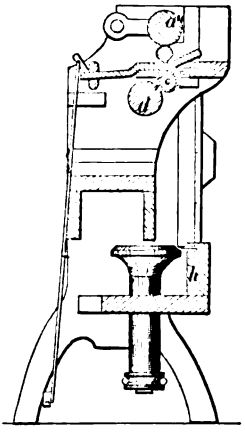

29652

29650

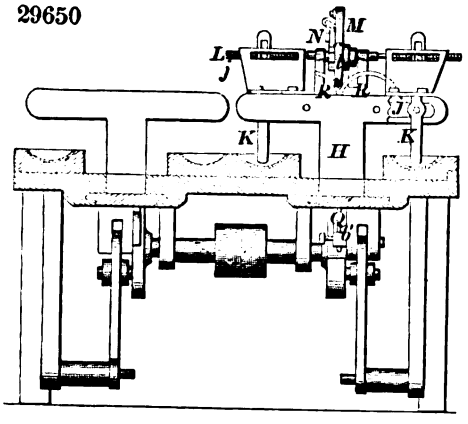

29651

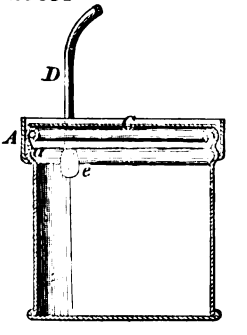

29653

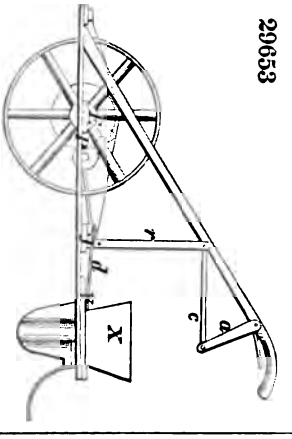

29654

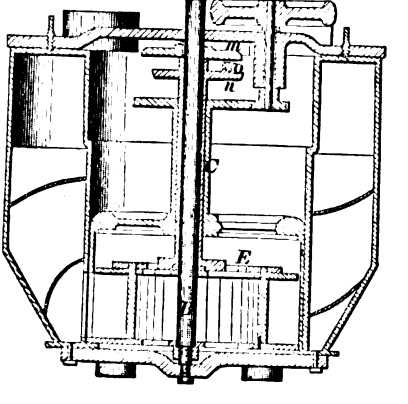

29655

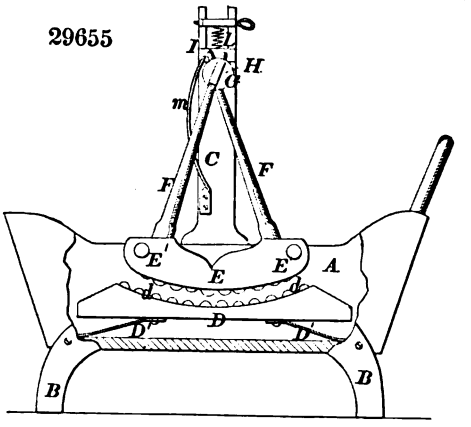

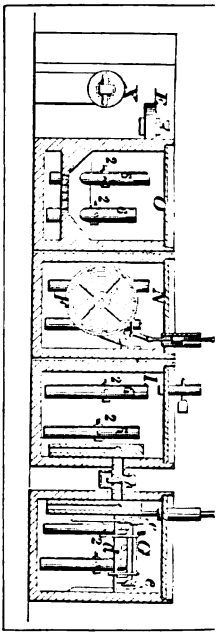

29657

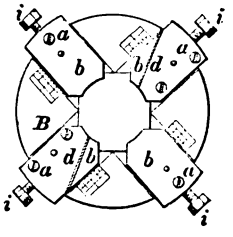

29658

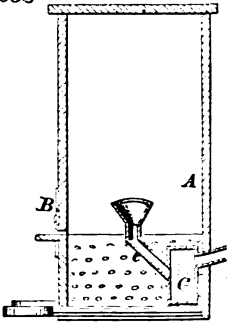

29659

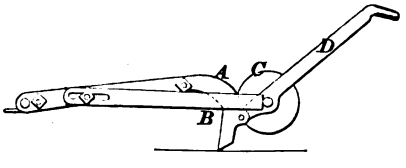

29660

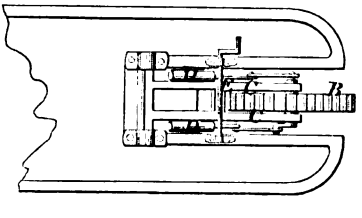

29661

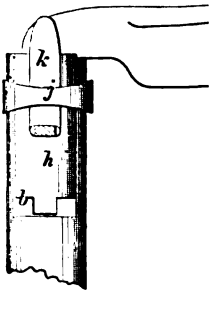

29662

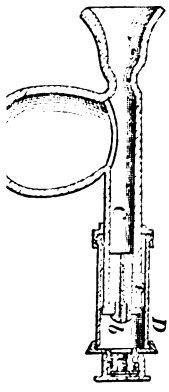

29663

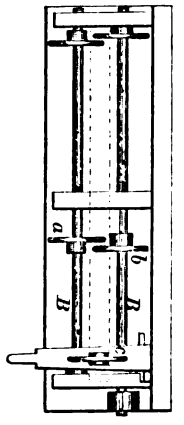

29666

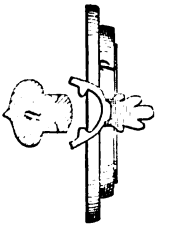

)664

29667

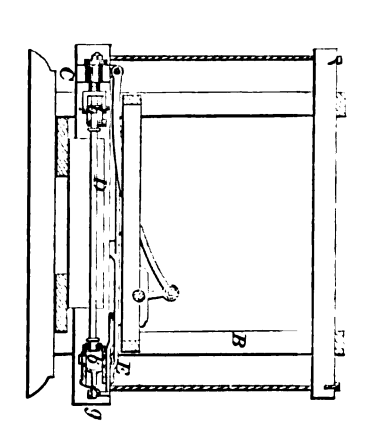

29668

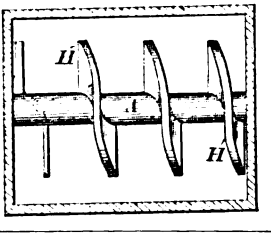

29669

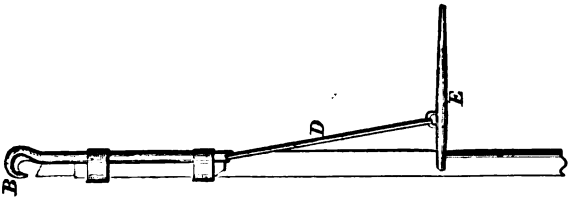

29670

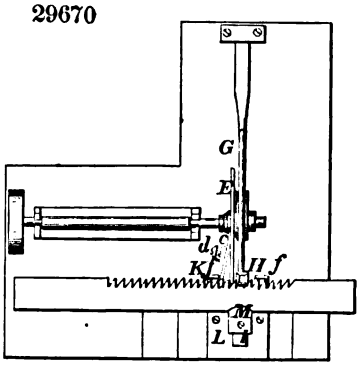

29671

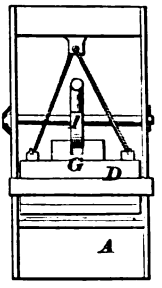

29673

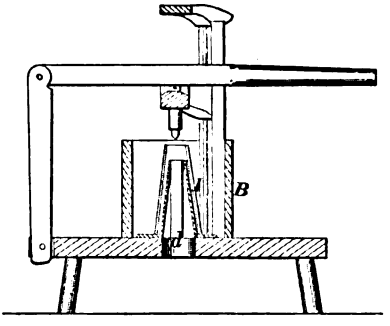

29674

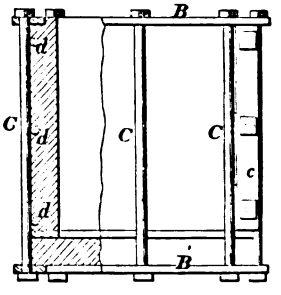

29675

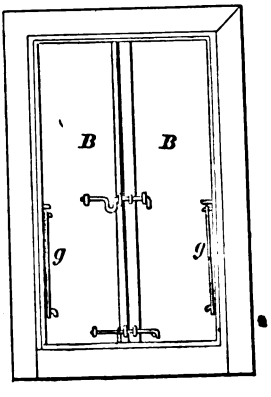

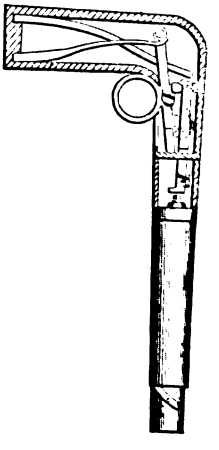

29677

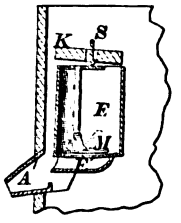

29678

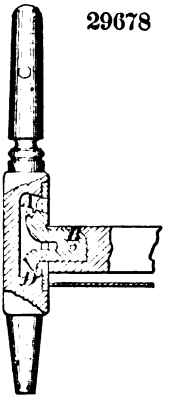

29679

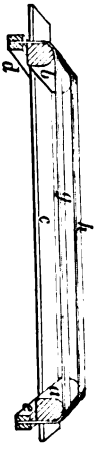

29680

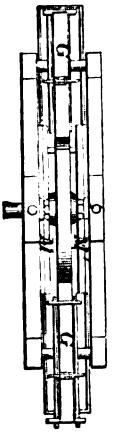

29681

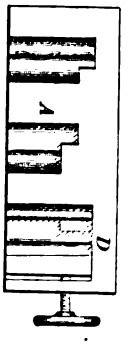

29682

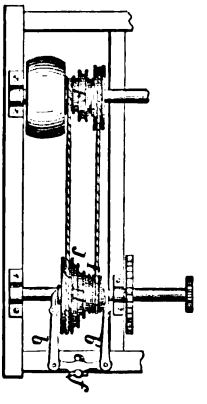

29683

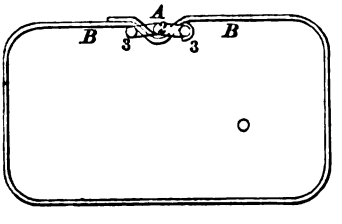

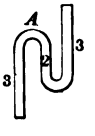

29684

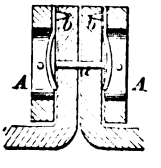

29685

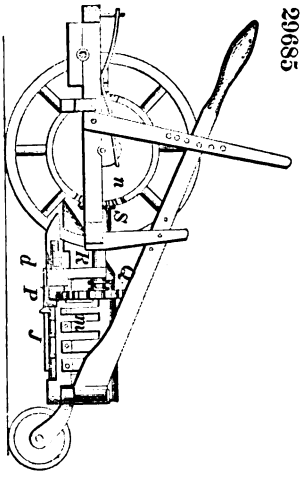

29686

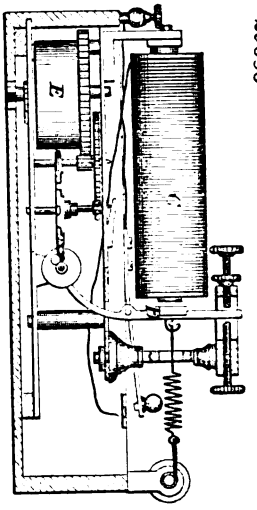

29687

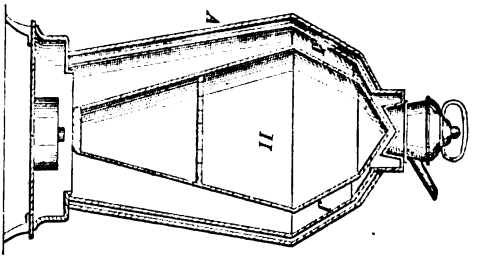

29688

29689

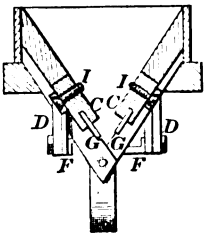

29690

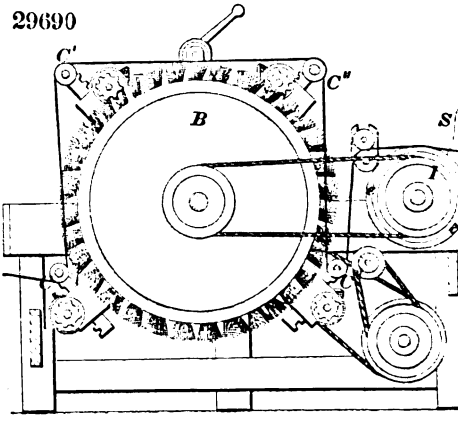

29691

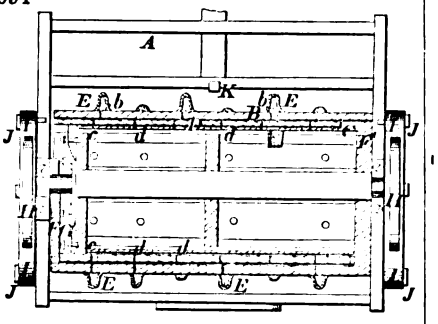

29692

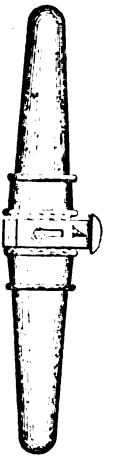

29693

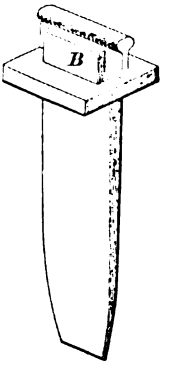

29695

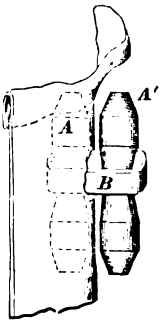

29694

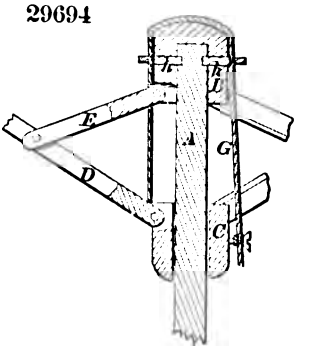

29696

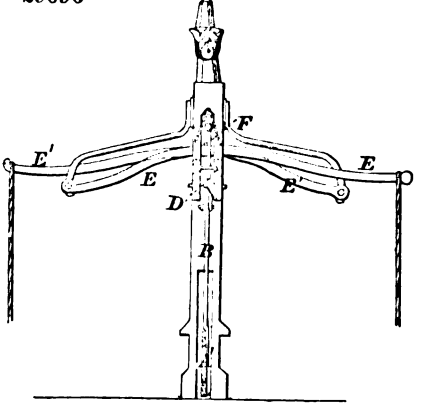

29697

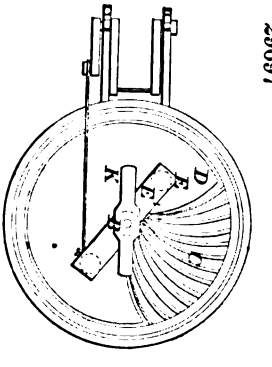

29698

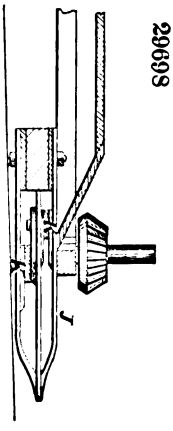

29699

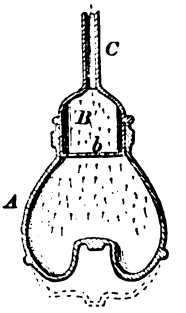

29700

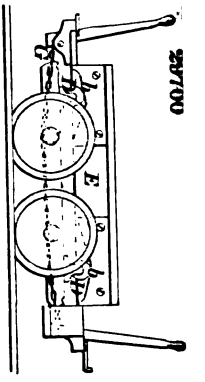

29701

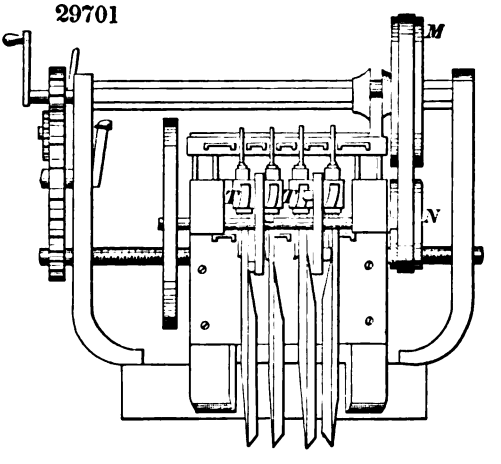

29702

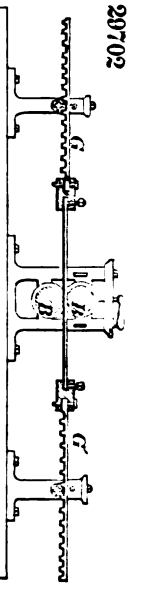

29703

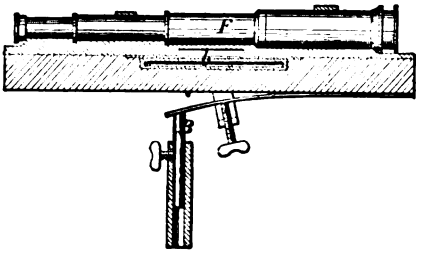

29704

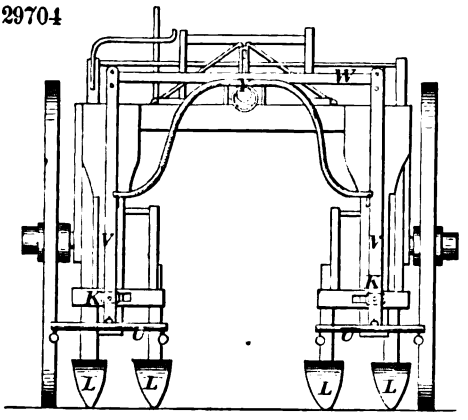

29705

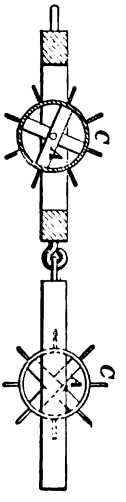

29708

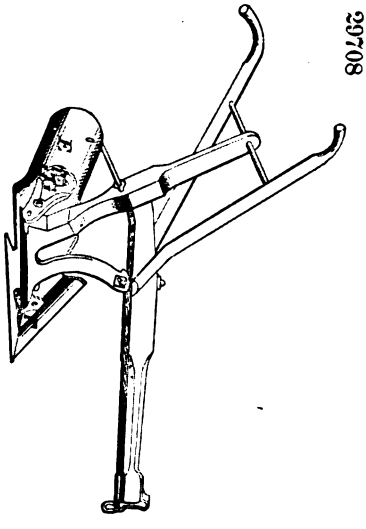

29706

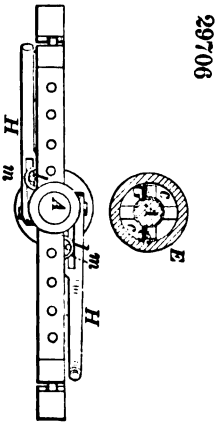

29707

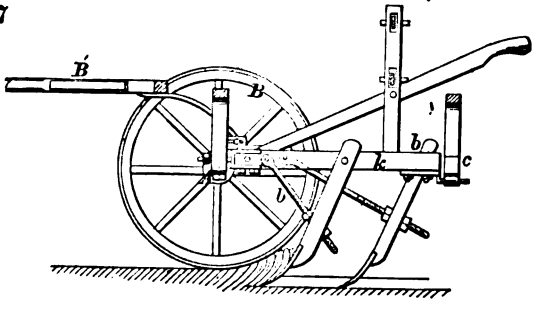

29709

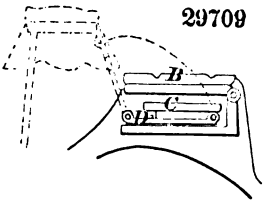

29710

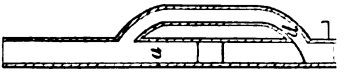

29712

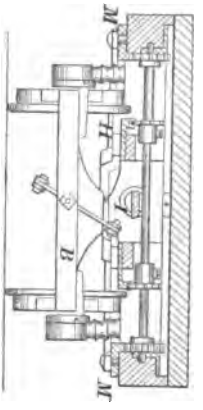

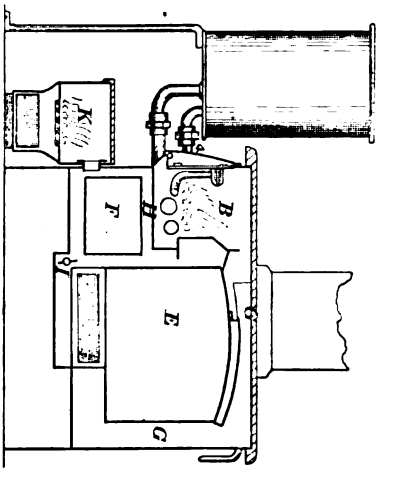

29713

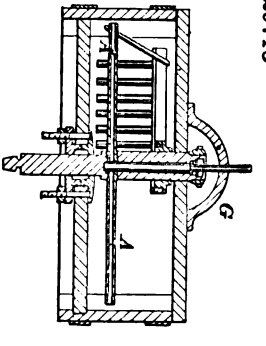

29714

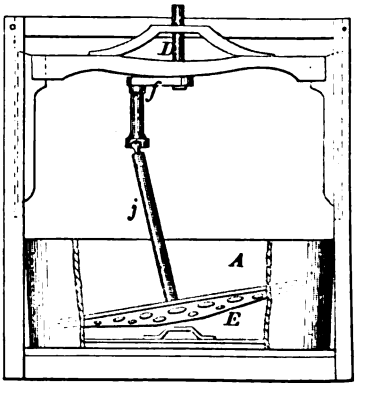

29715

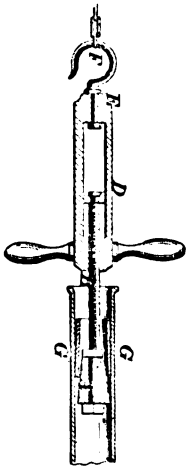

29716

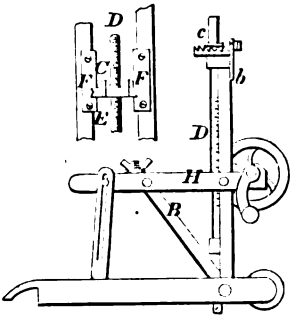

29717

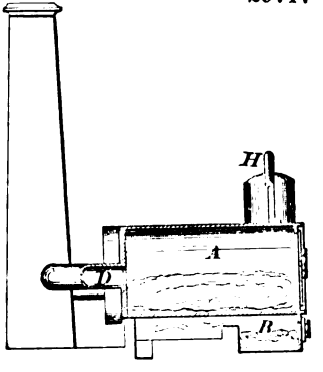

29719

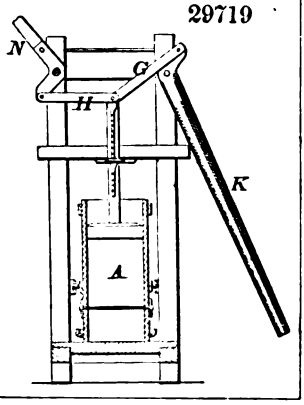

29718

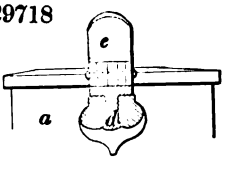

29720

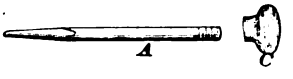

29723

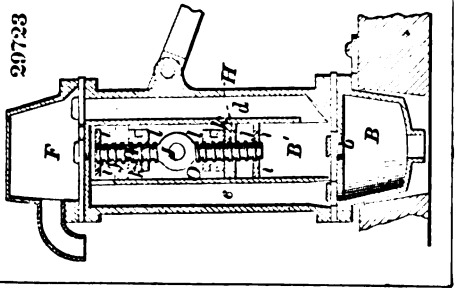

29721

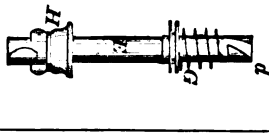

29724

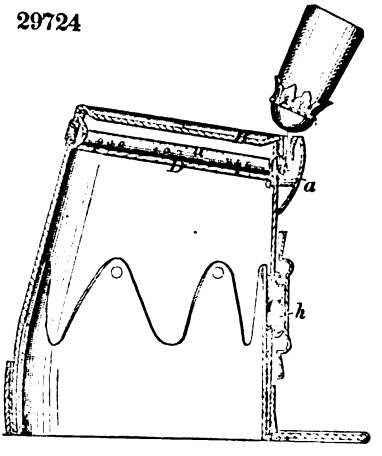

29726

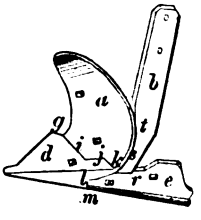

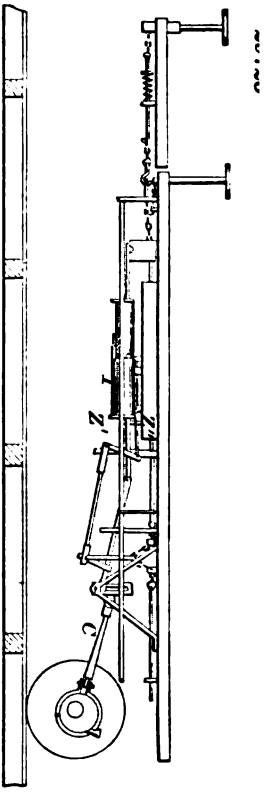

29727

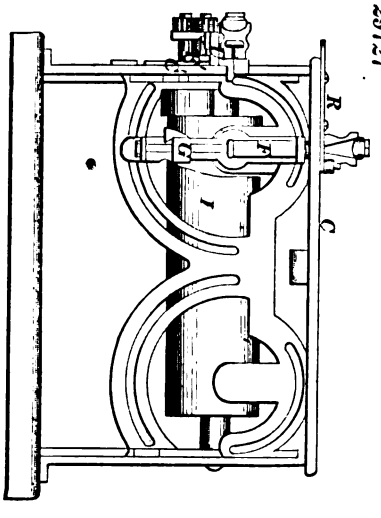

29728

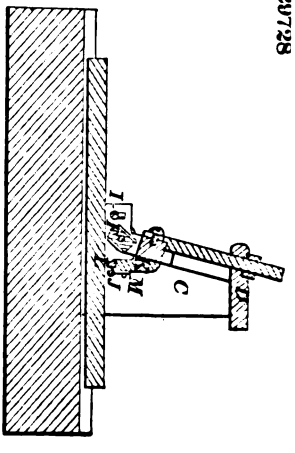

29729

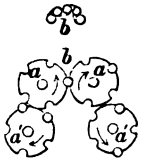

29730

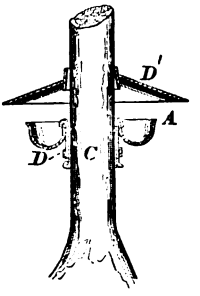

29731

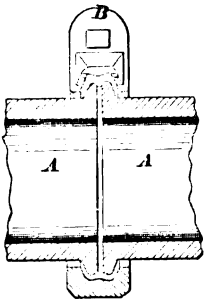

29733

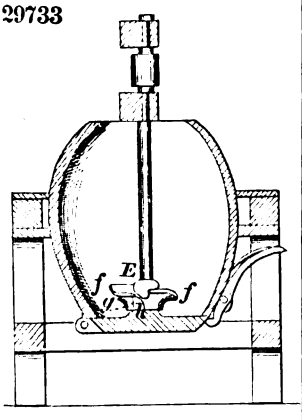

29732

Fig. 1

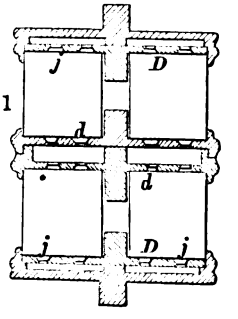

Fig. 2

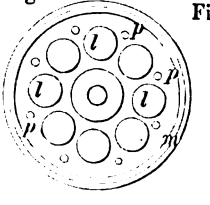

Fig. 3

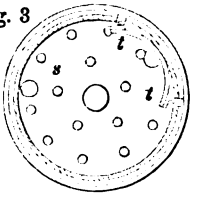

29734

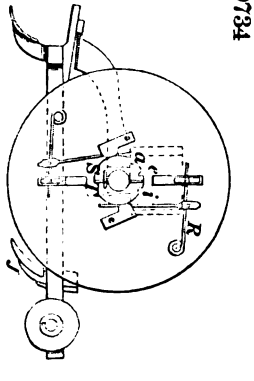

29735

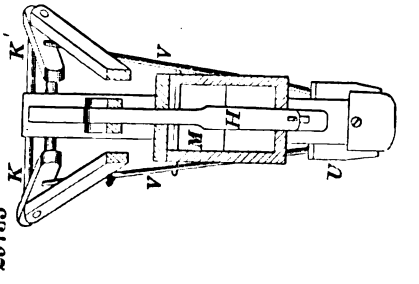

29736

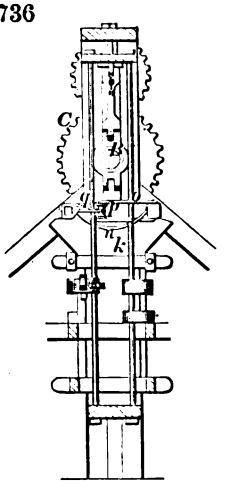

29737

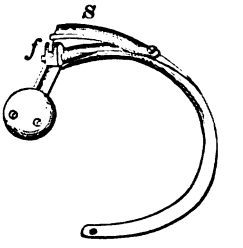

29738

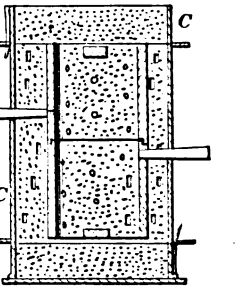

29739

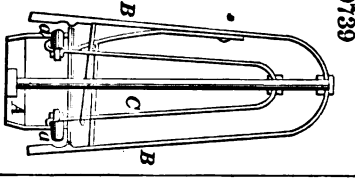

29740

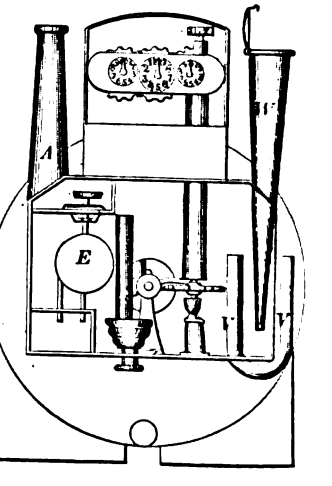

29741

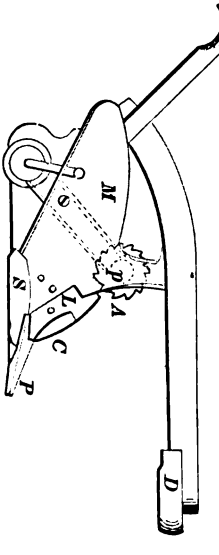

29742

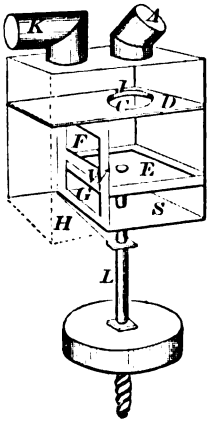

29743

Fig. 1

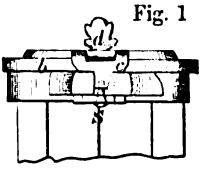

Fig. 2

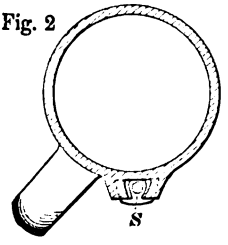

29745

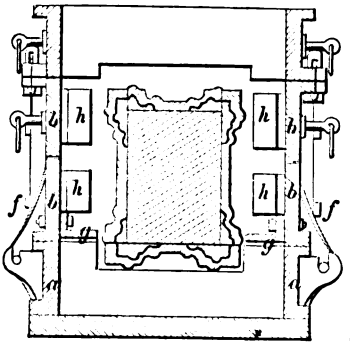

29744

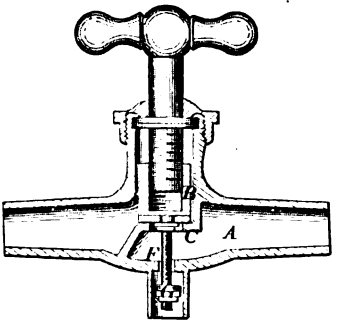

29746

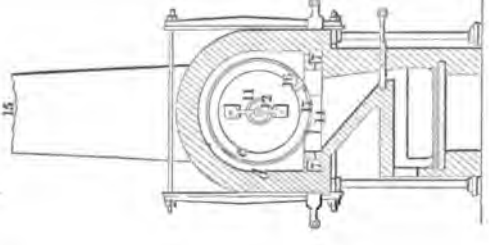

29747

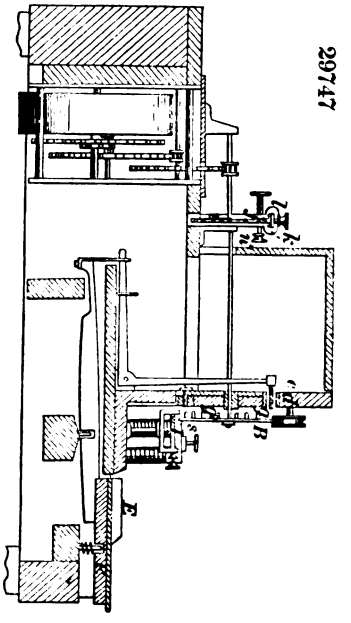

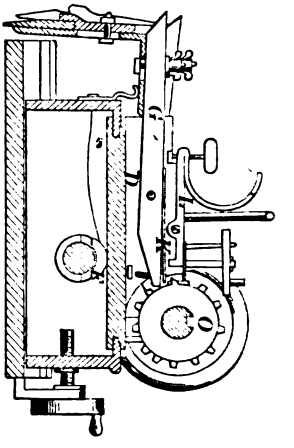

29750

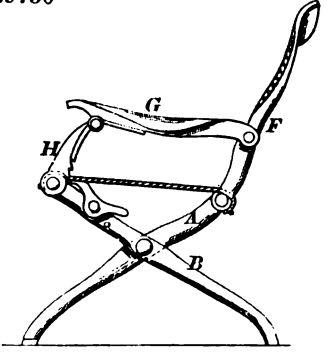

29751

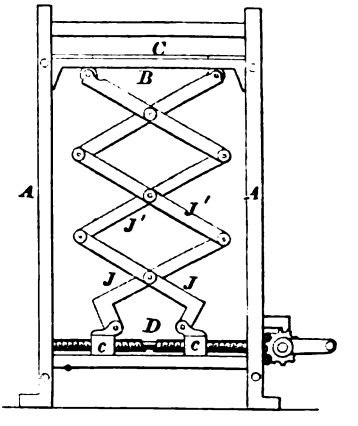

29749

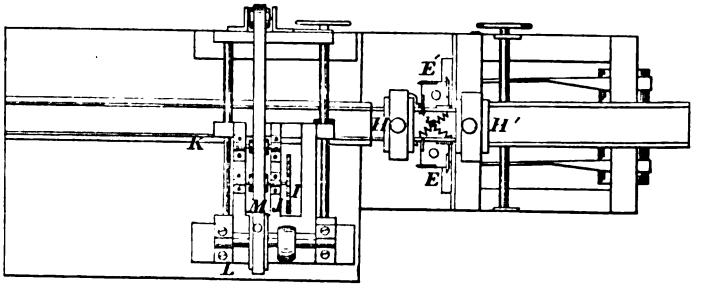

29752

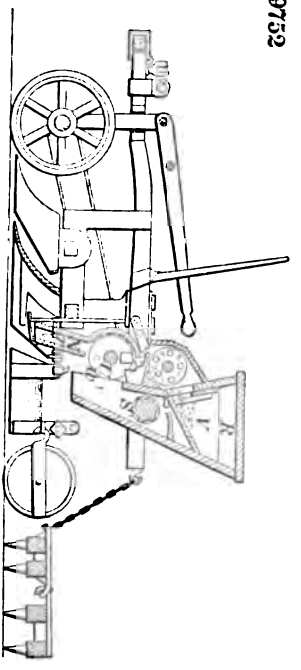

29753

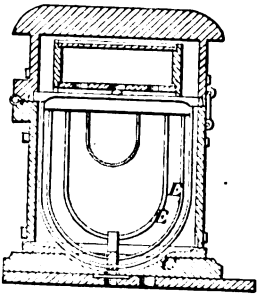

29754

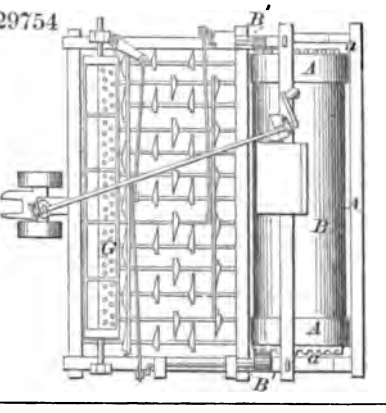

29755

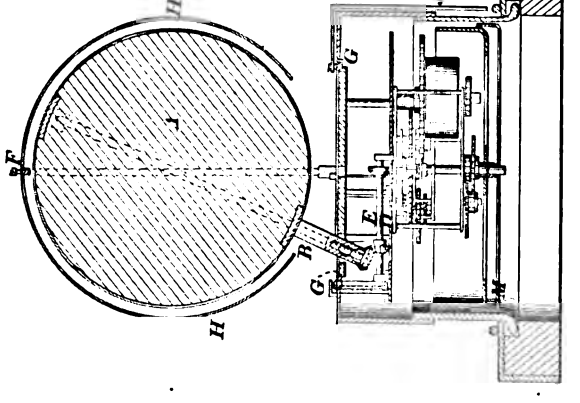

29756

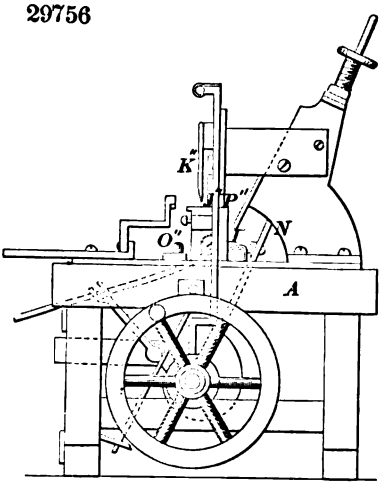

29757

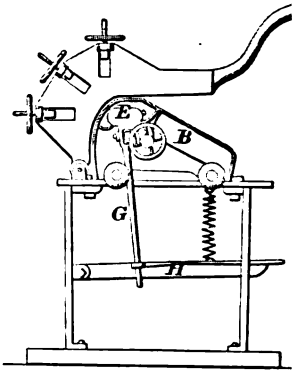

29758

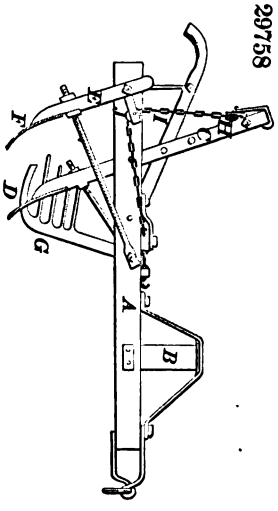

29759

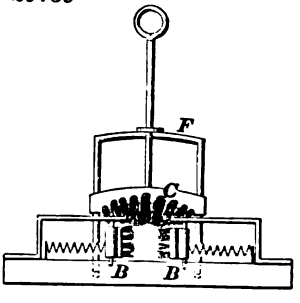

29760

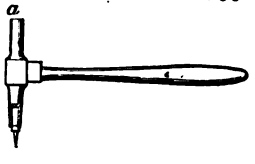

29761

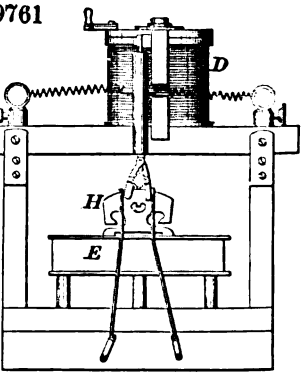

29762

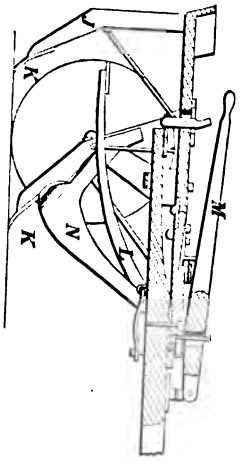

29763

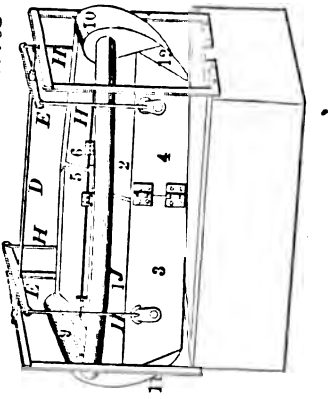

29764

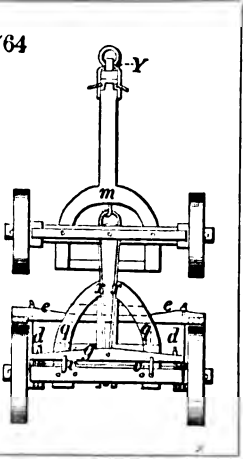

29766

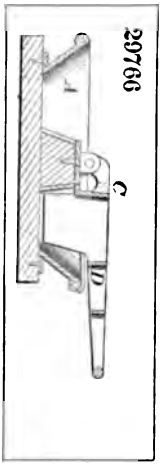

29765

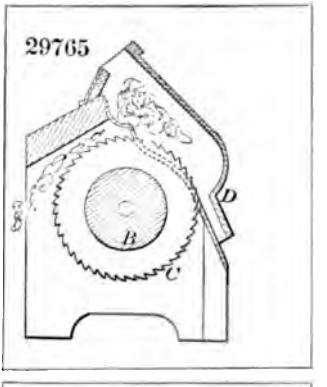

29767

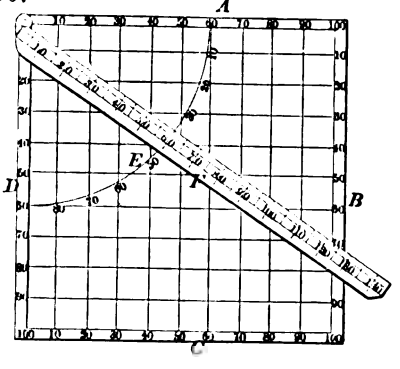

29768

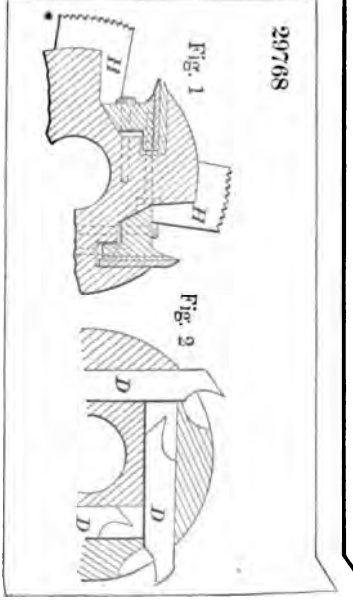

29769

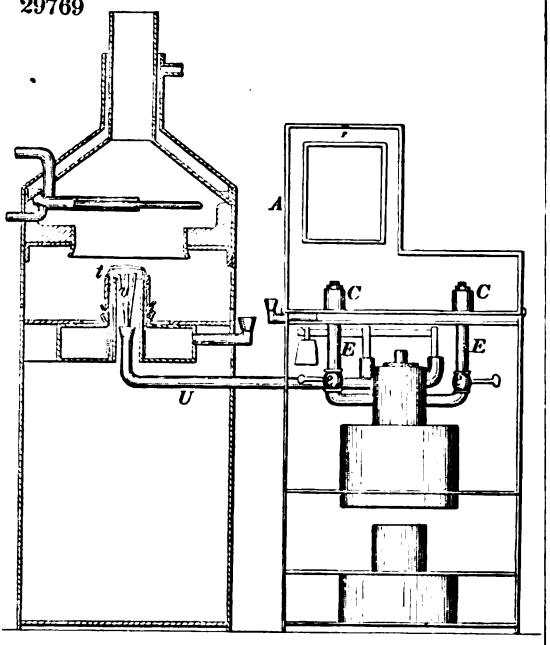

29770

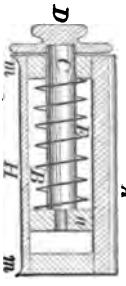

29771

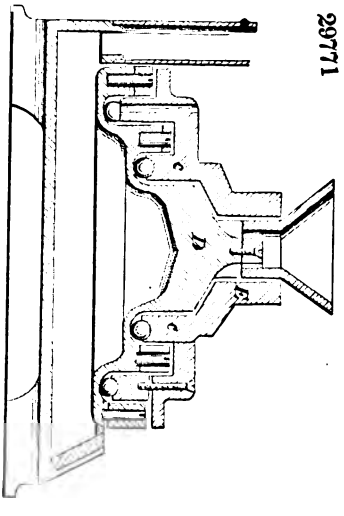

29772

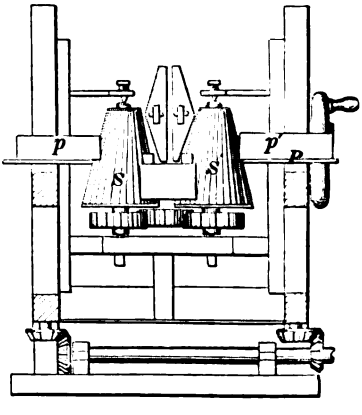

29773

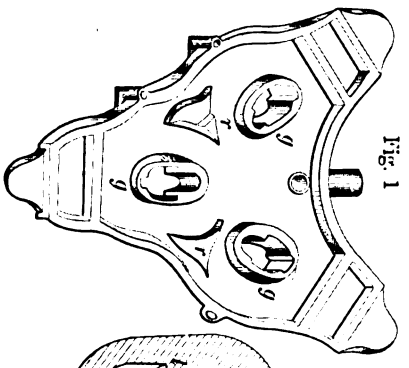

Fig. 1

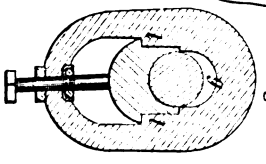

Fig. 2

29774

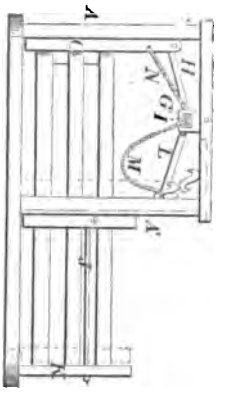

29775

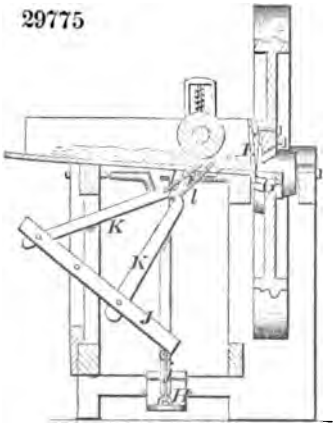

29776

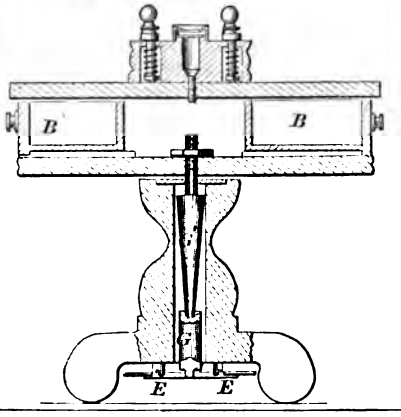

29777

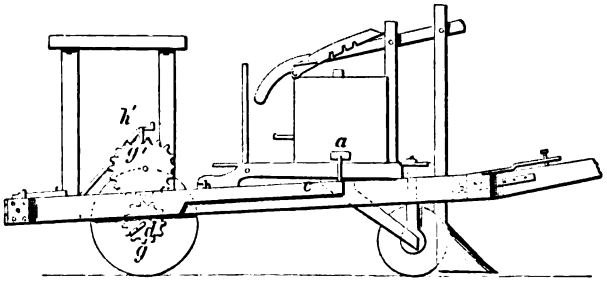

29778.

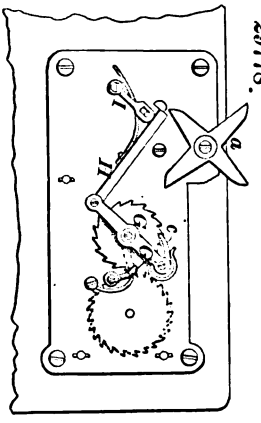

29779

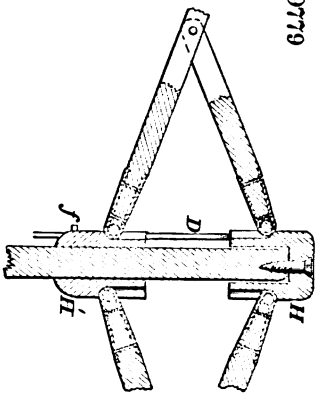

29782

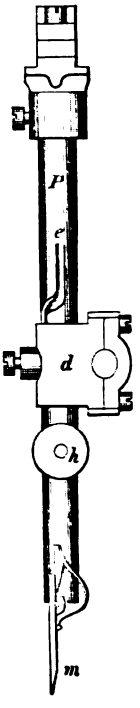

29780

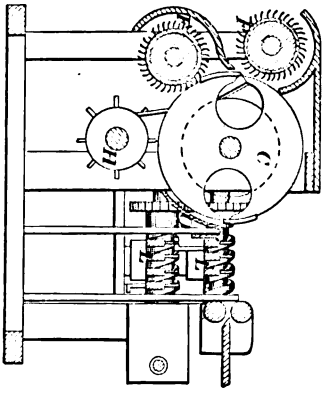

29781

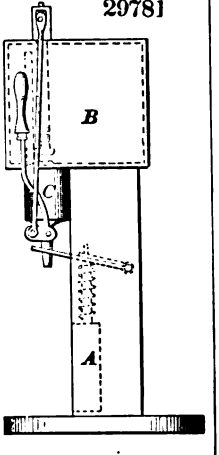

29783

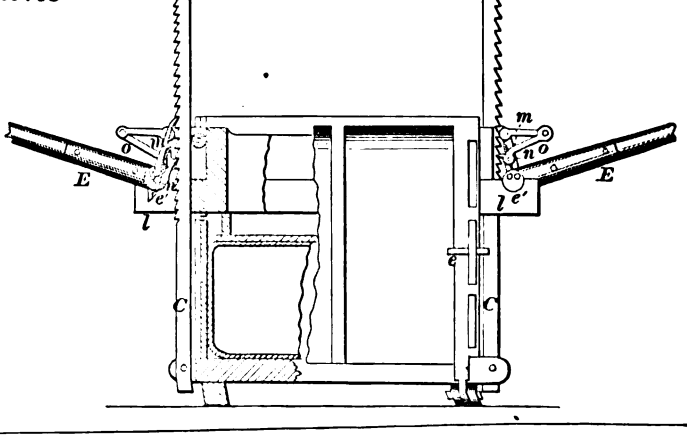

29784

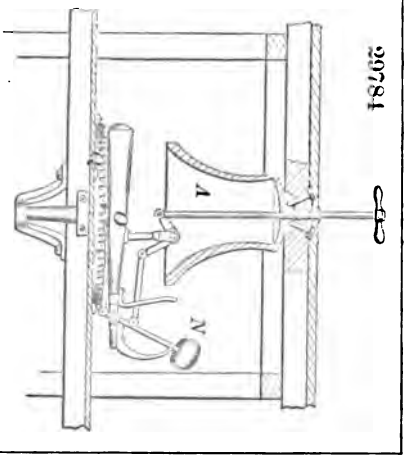

29785

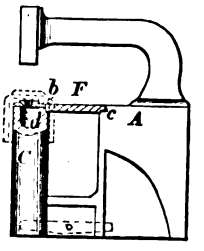

29789

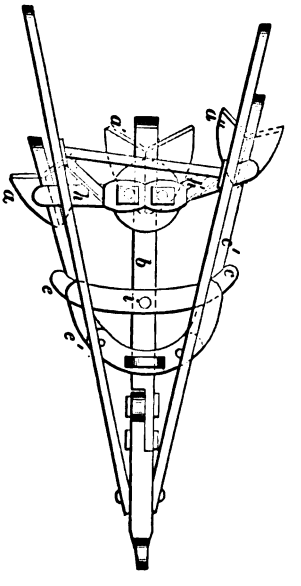

29787

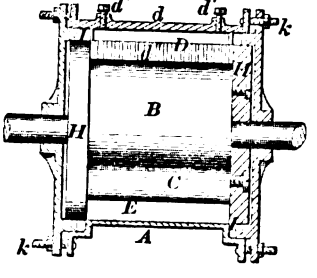

29786

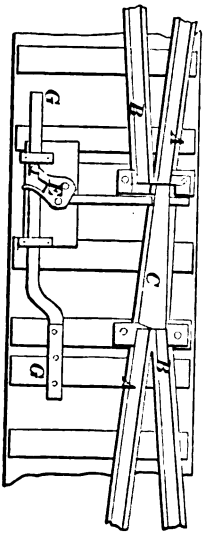

29788

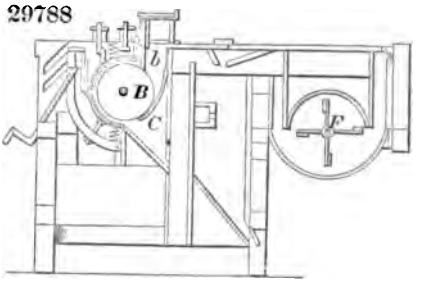

29790

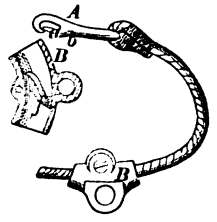

29793

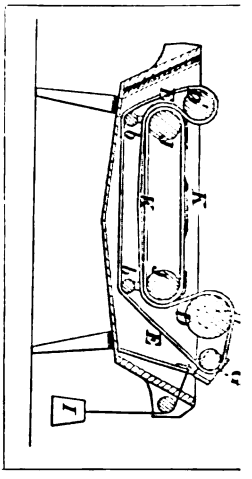

29792

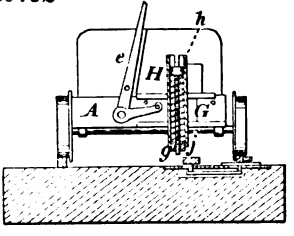

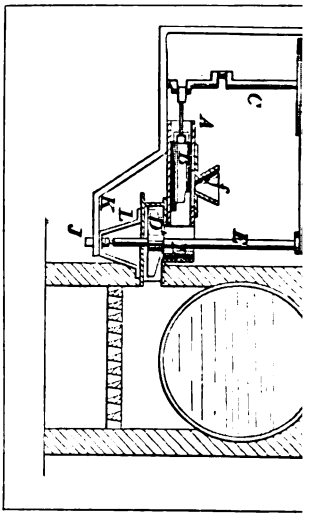

29795

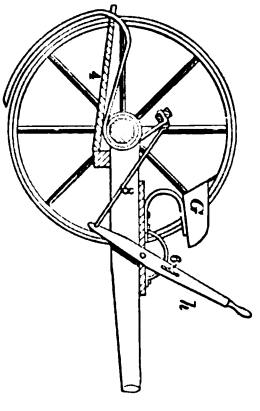

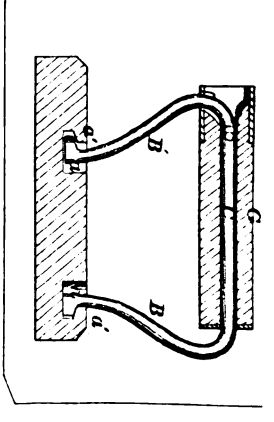

29797

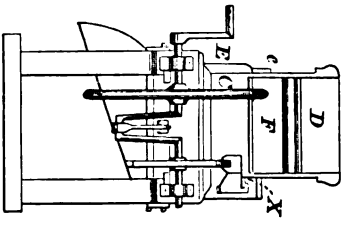

29798

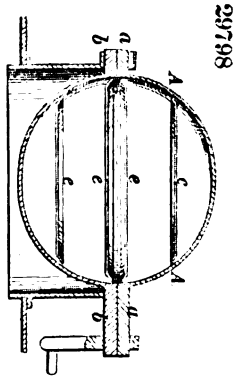

29801

29799

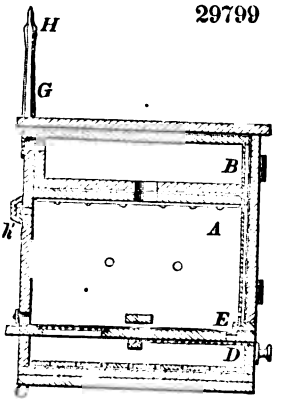

29800

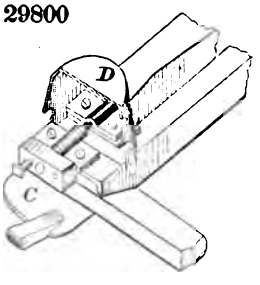

29802

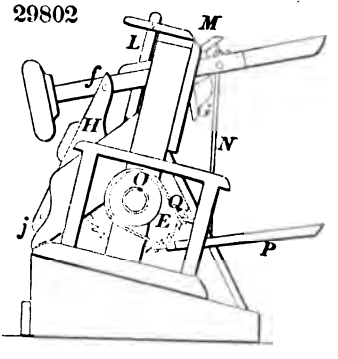

29803

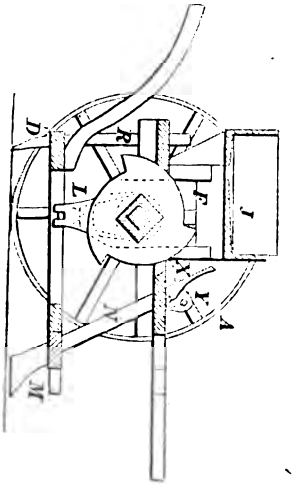

29804

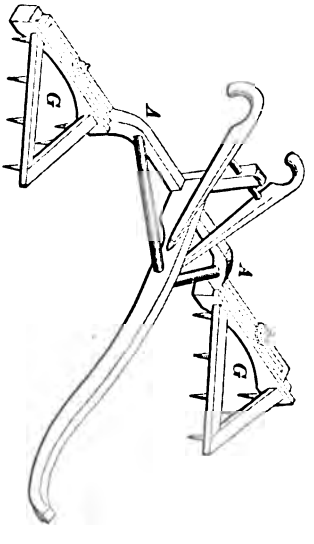

29805

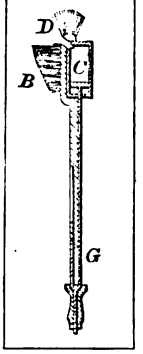

29806

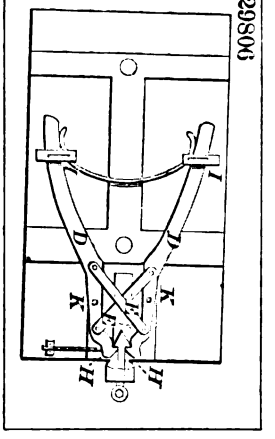

29807

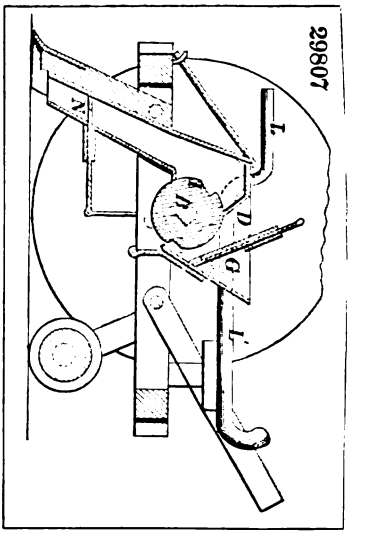

29808

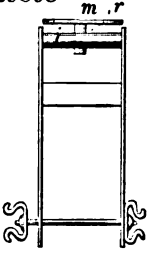

29809

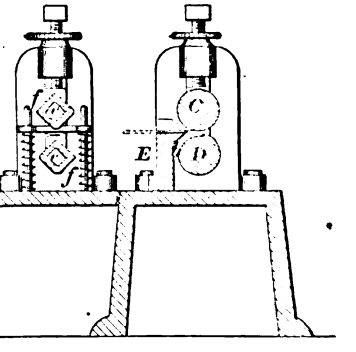

29810

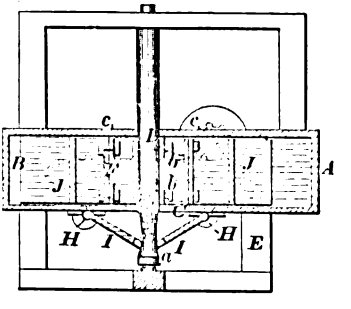

29811

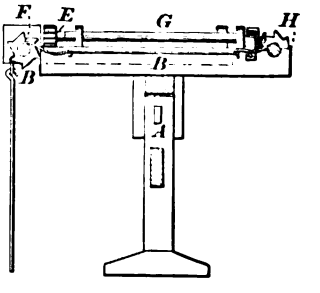

29812

Fig. 1

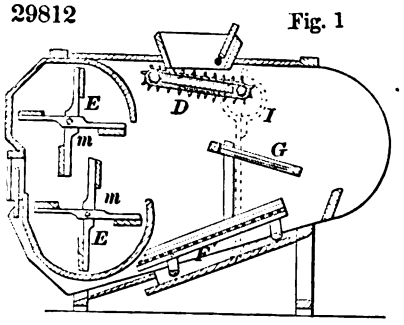

Fig. 2

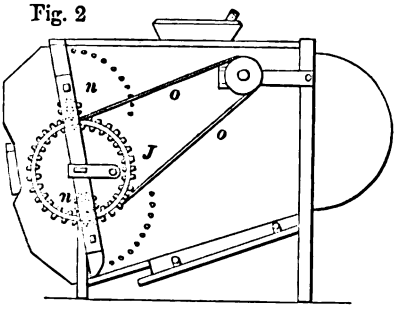

29814

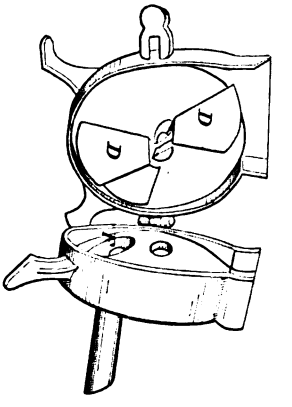

29815

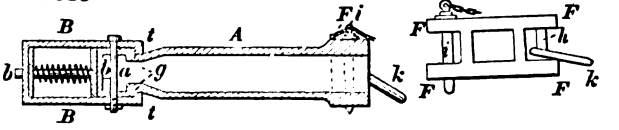

29813

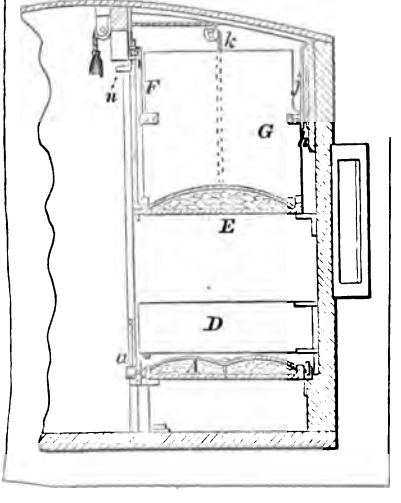

29816

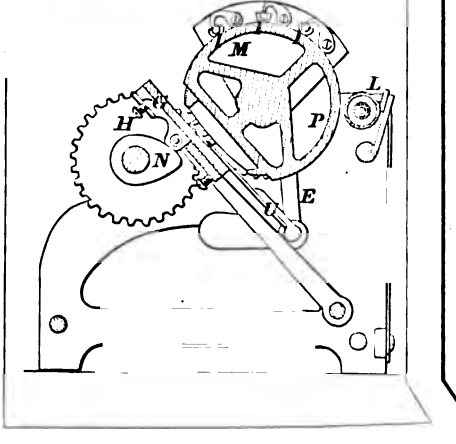

29817

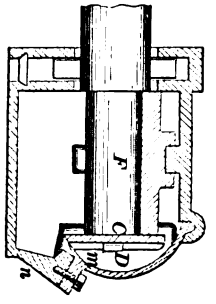

29818

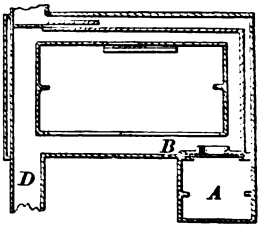

29819

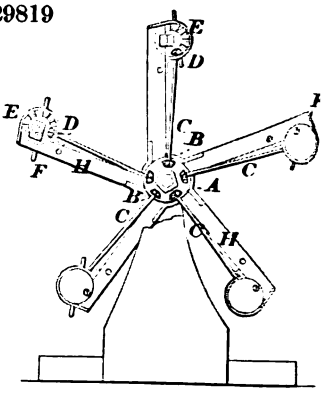

29820

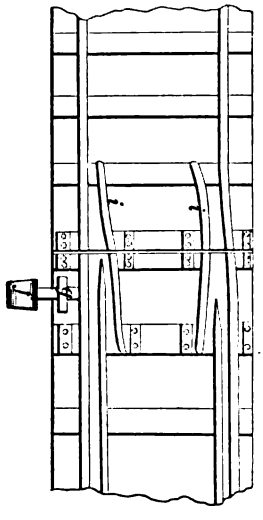

29821

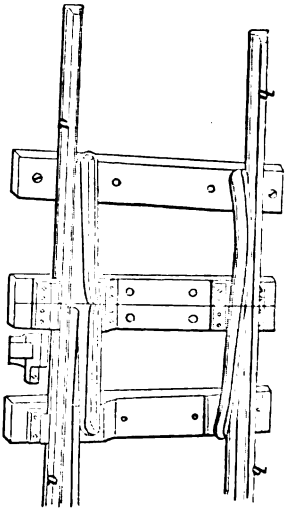

29822

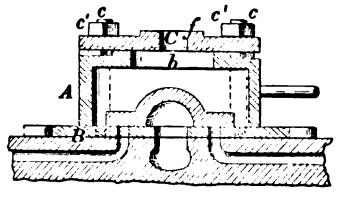

29823

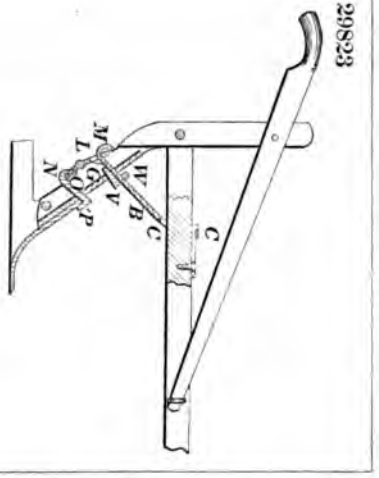

29824

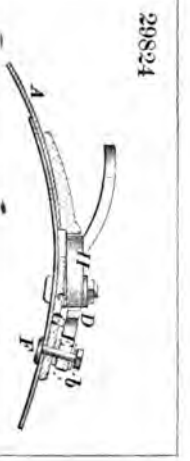

29825

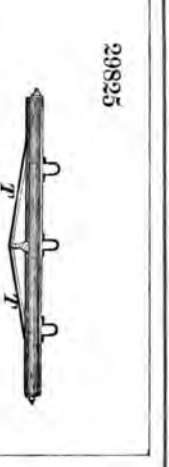

29827

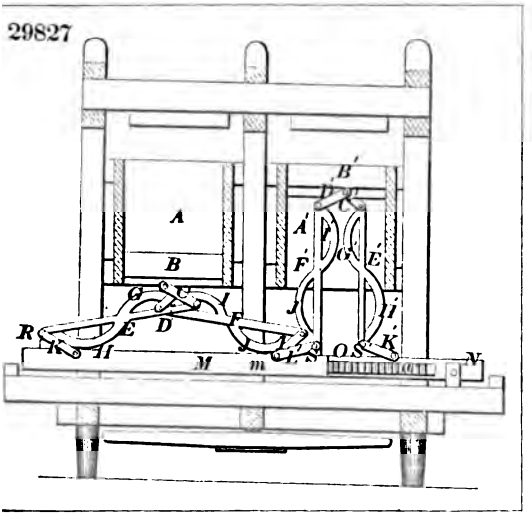

29828

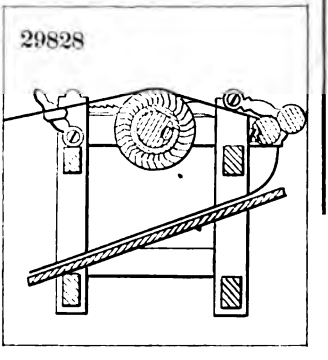

29826

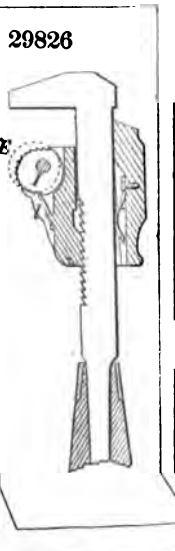

29829

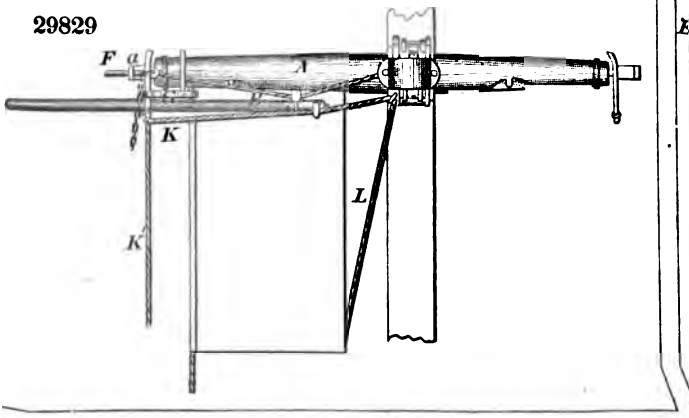

29830

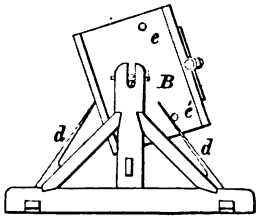

29831

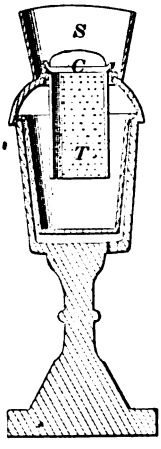

29832

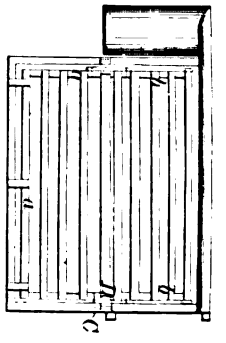

29833

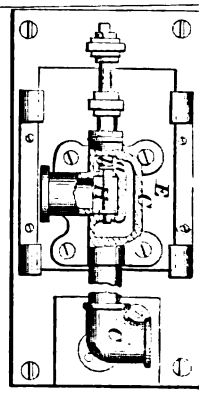

29834

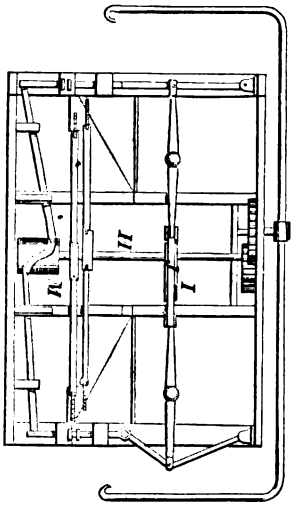

29835

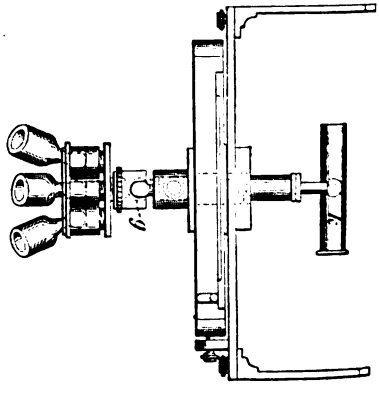

29836

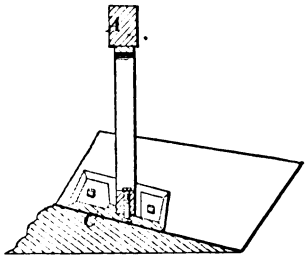

29837

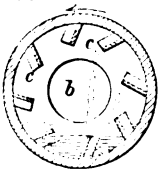

29838

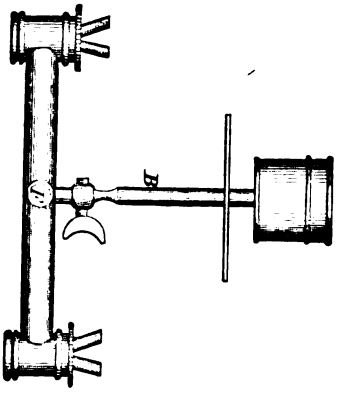

29839

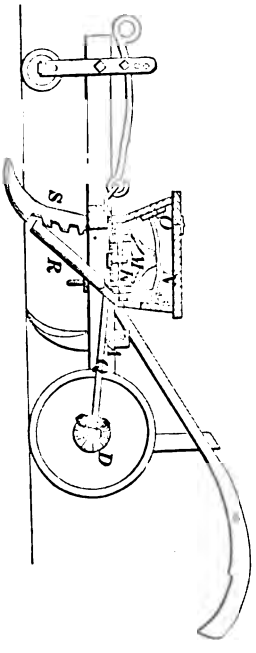

29840

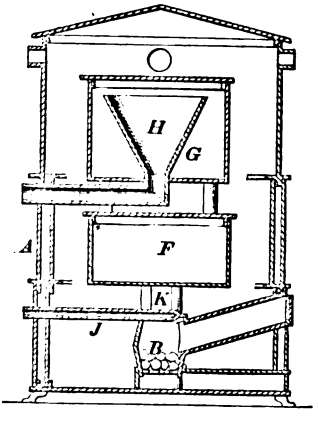

29841

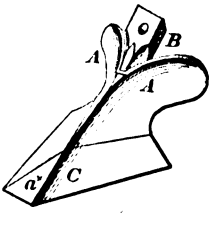

29842

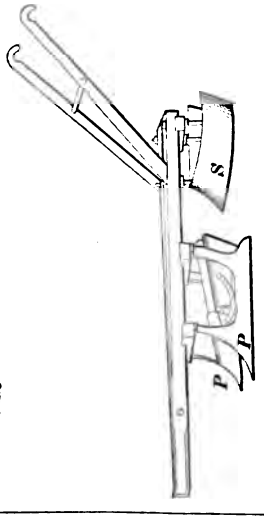

29844

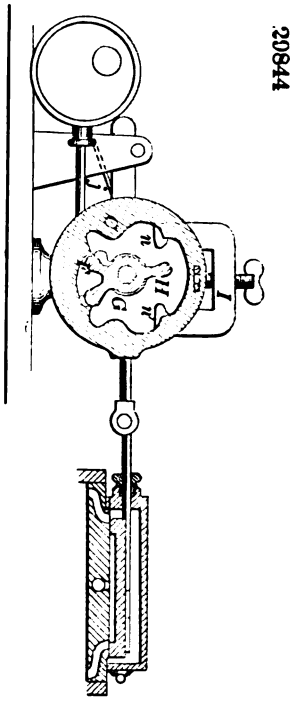

29843

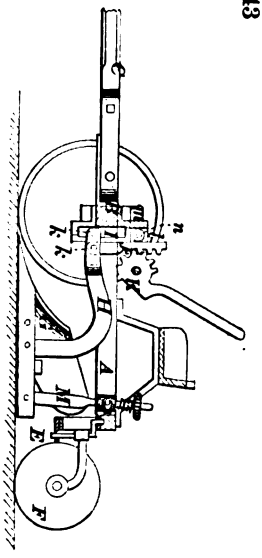

29847

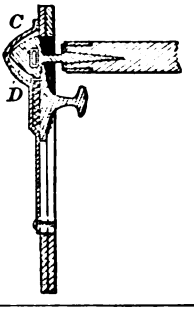

29848

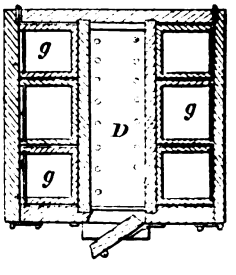

29846

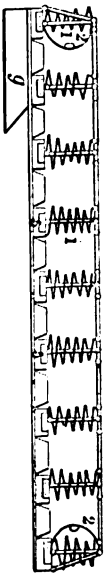

29845

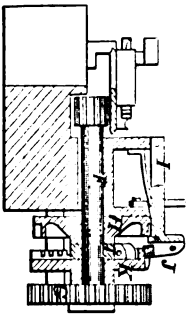

29849

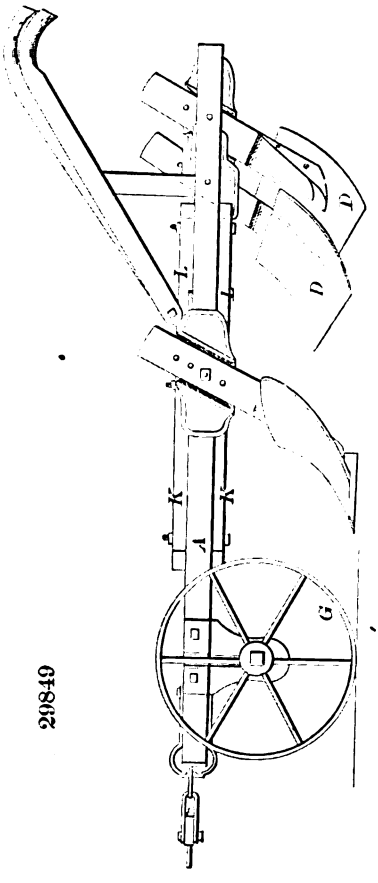

29850

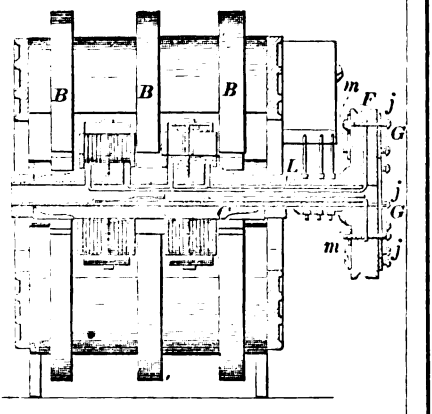

29851

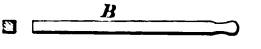

29853

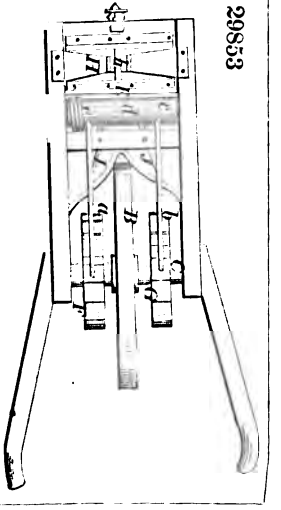

29852

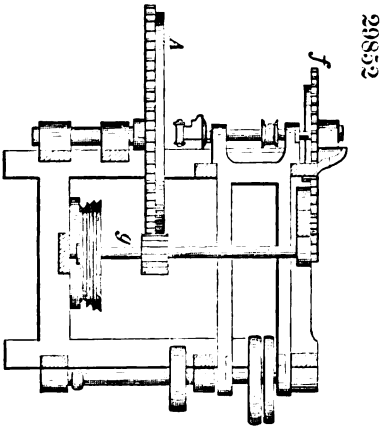

29854

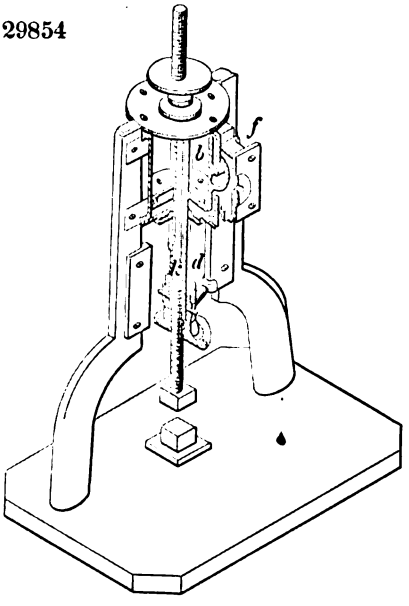

29855

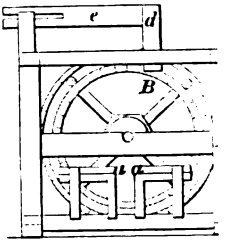

29858

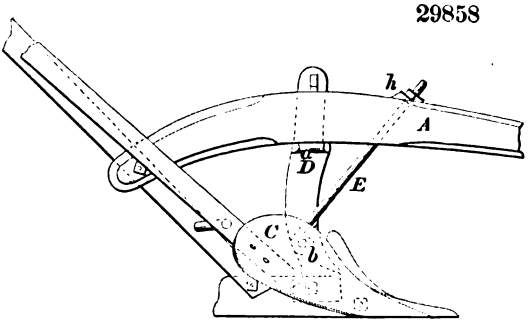

29857

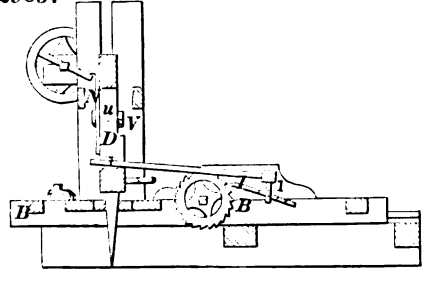

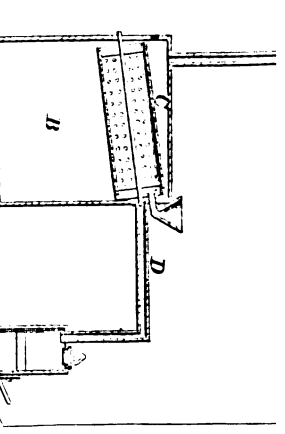

29861

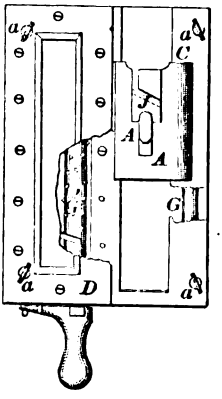

29862

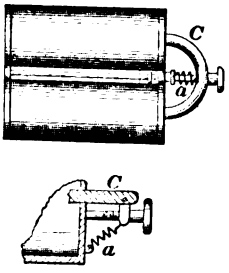

29864

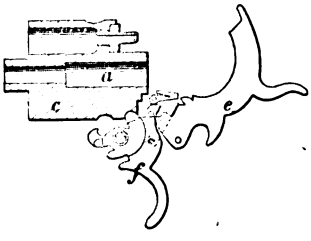

29863

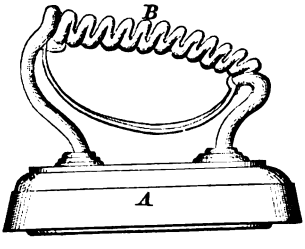

29865

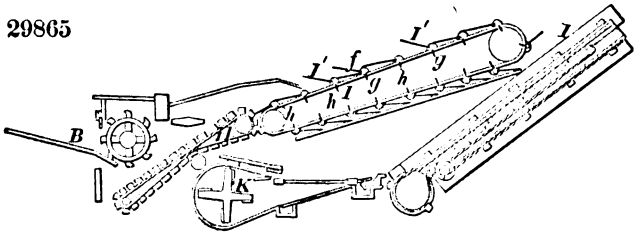

29866

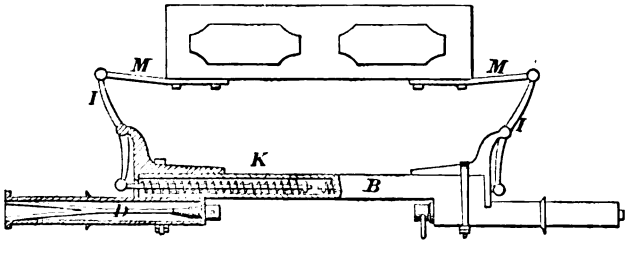

29867

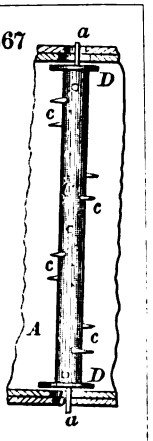

29868

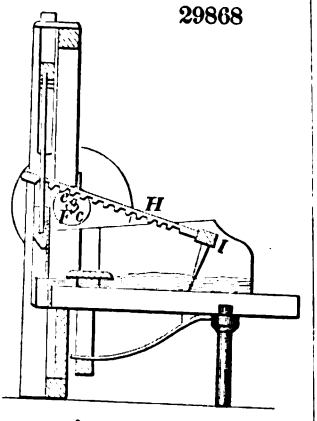

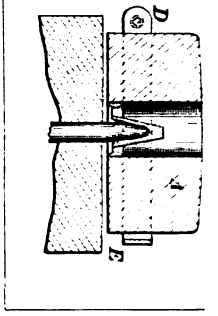

29870

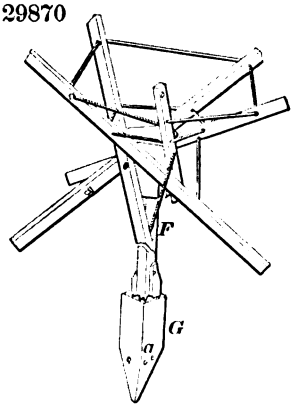

29871

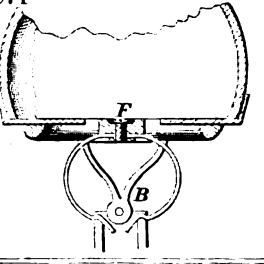

29873

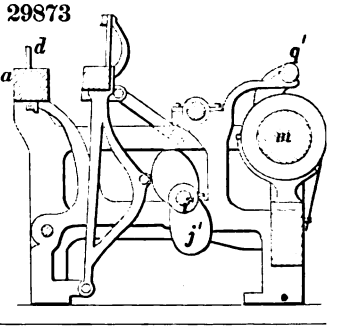

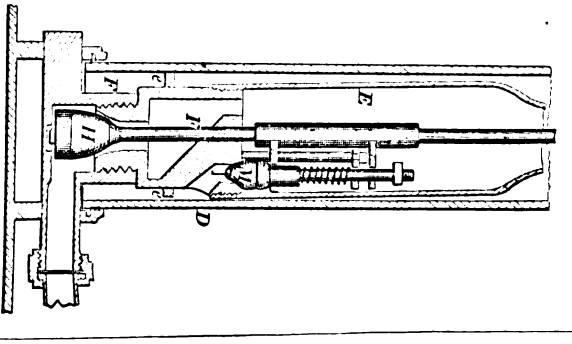

29874

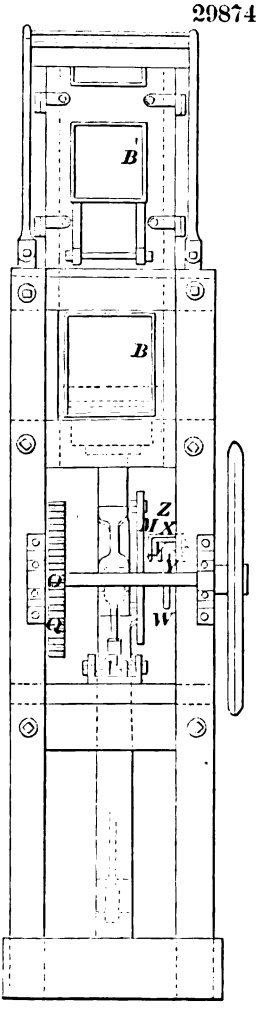

29875

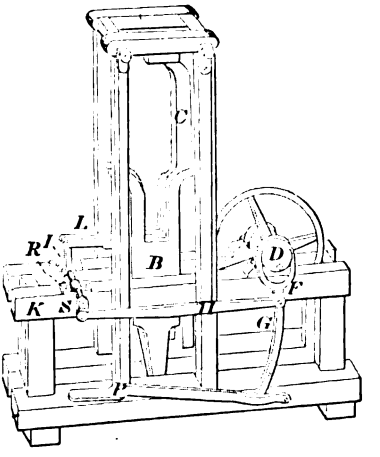

29876

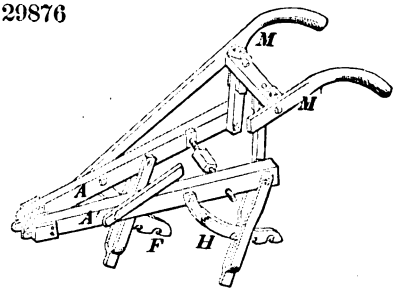

29878

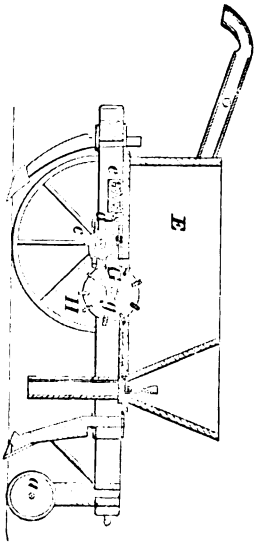

29877

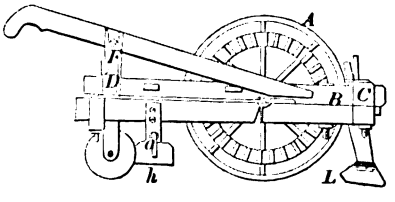

29879

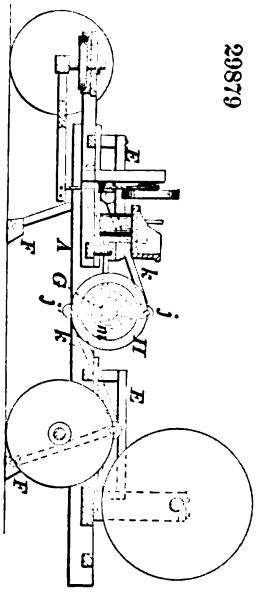

29880

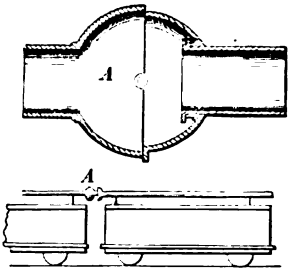

29881

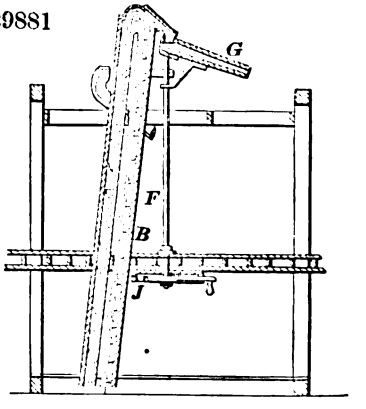

29882

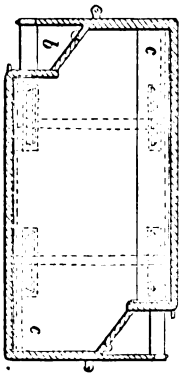

29883

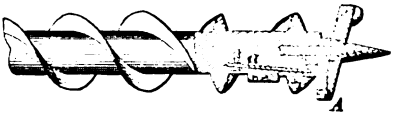

29885

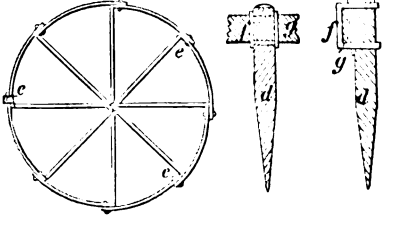

29884

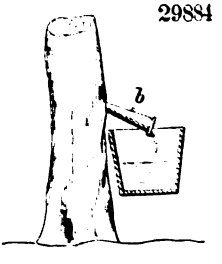

29886

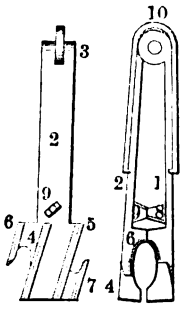

29887

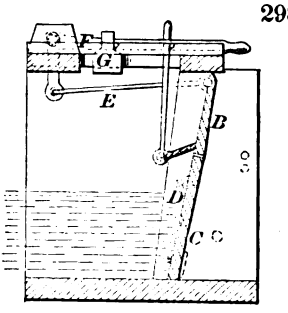

29888

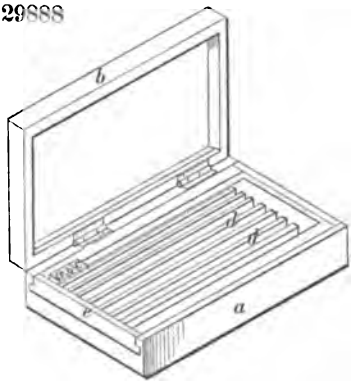

29889

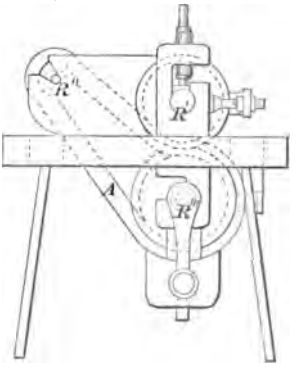

29890

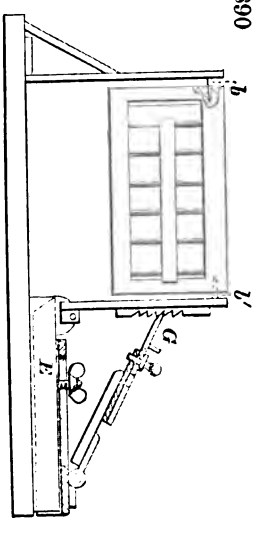

29891

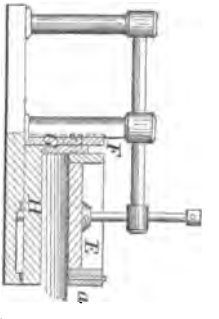

29892

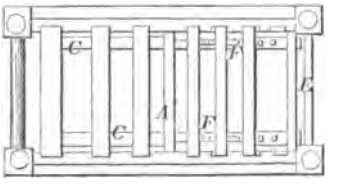

29893

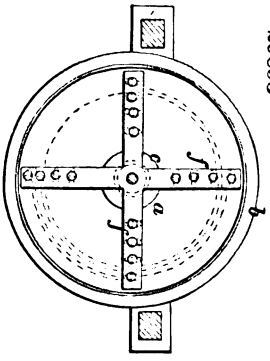

29894

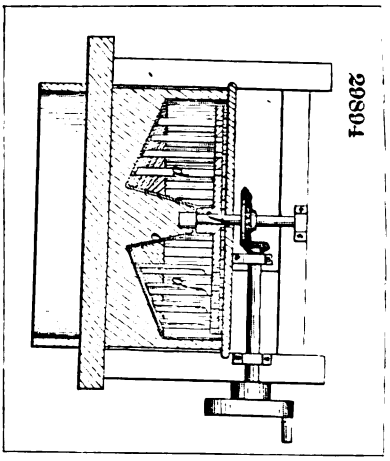

29895

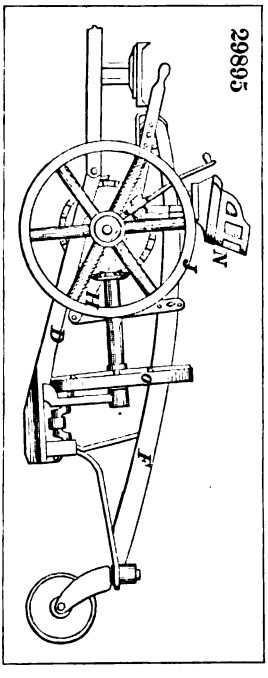

29896

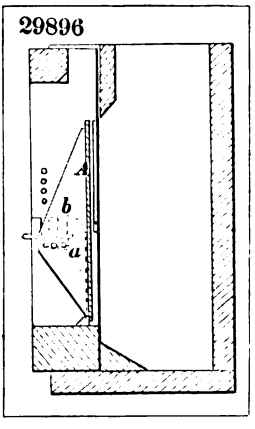

29897

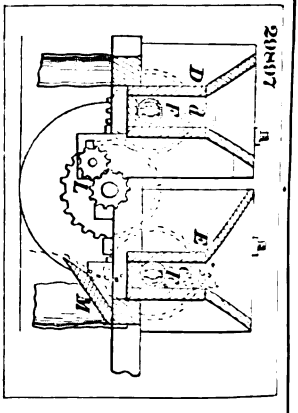

29899

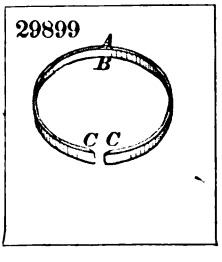

10662

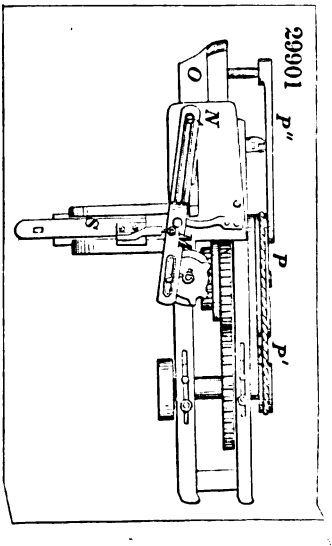

29900

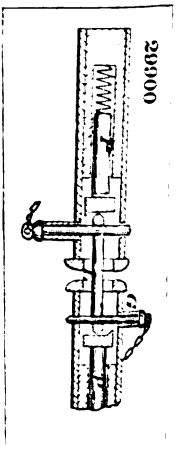

29902

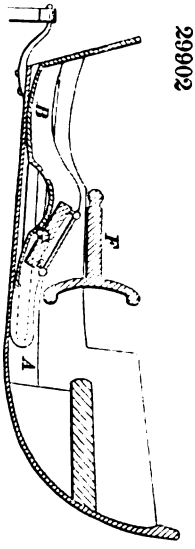

29903

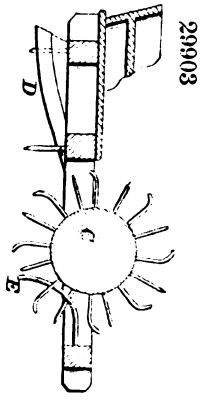

29905

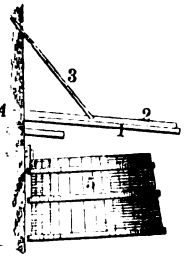

29904

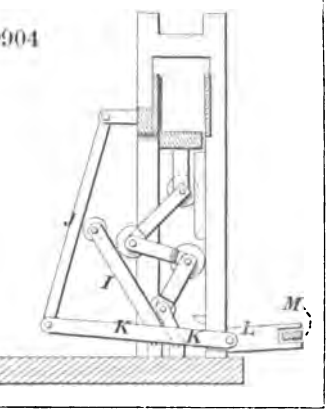

29906

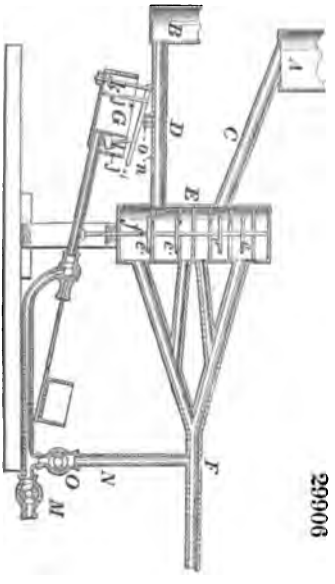

29907

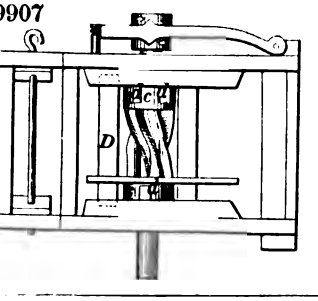

29908

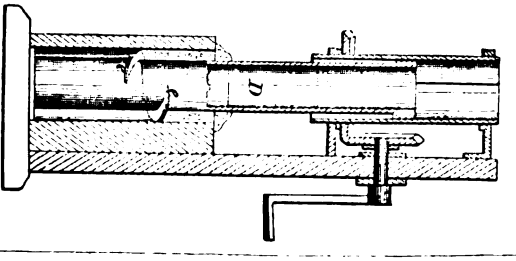

29910

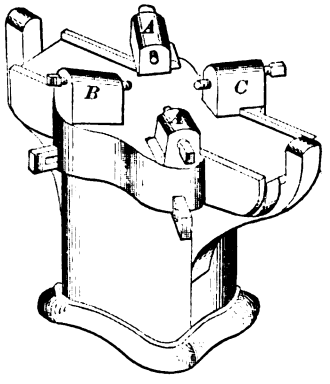

29911

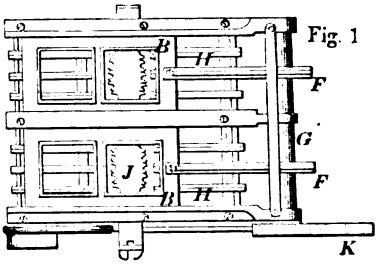

Fig. 1

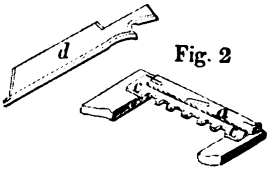

Fig. 2

29912

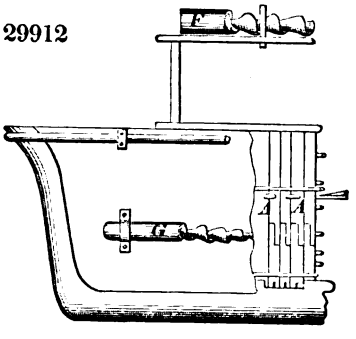

29913

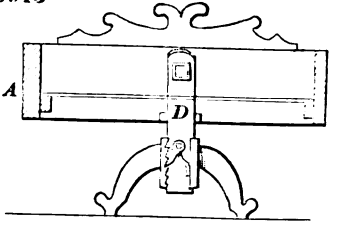

29914

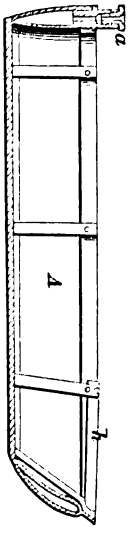

29916

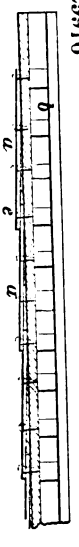

29915

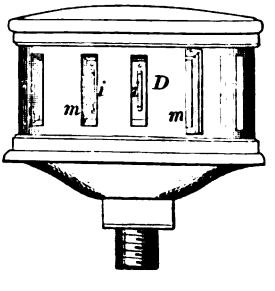

29917

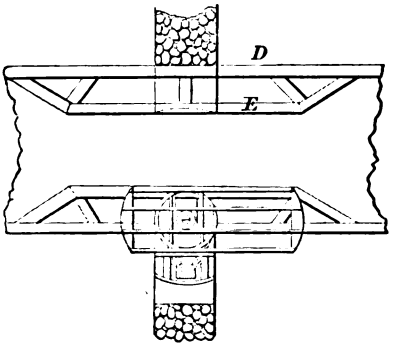

29918

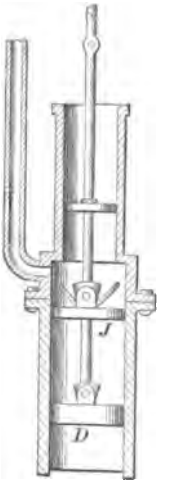

29920

Fig. 1

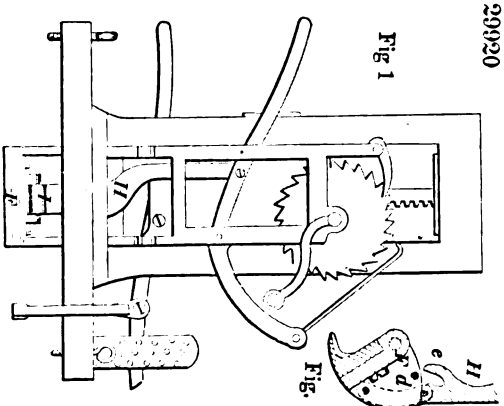

Fig. 2

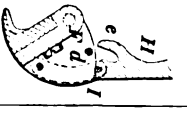

29922

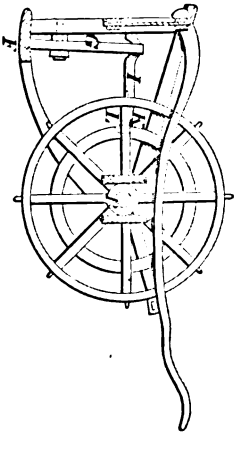

29921

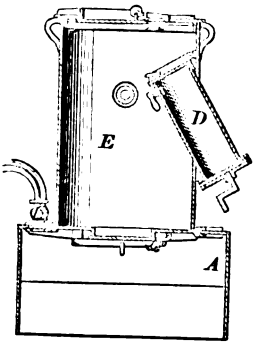

29923

Fig. 1

29926

29928

29929

29930

29930

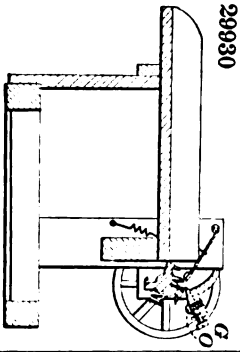

29931

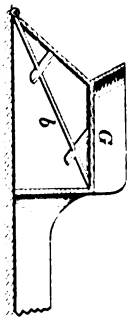

29932

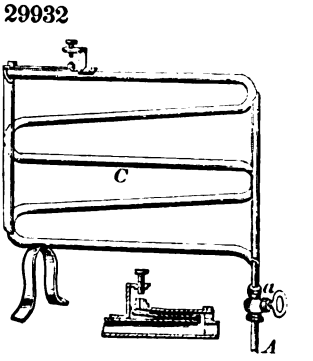

29933

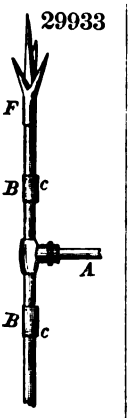

29934

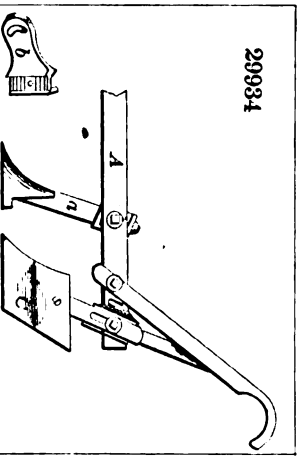

29935 Fig. 1 Fig. 2

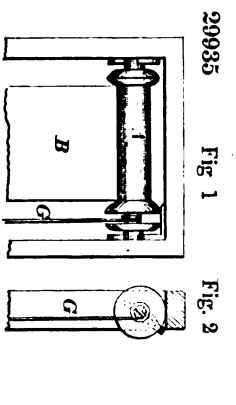

29936

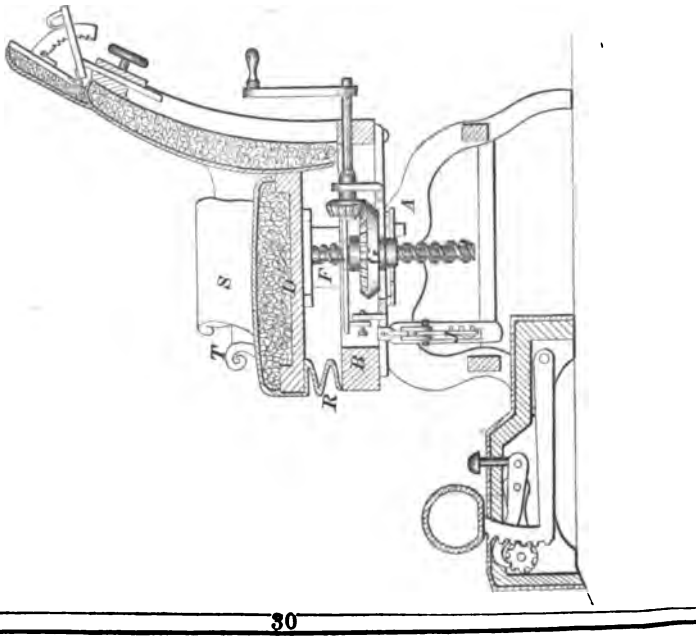

29937

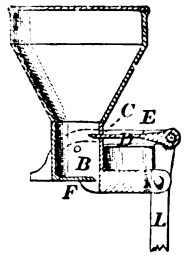

29938

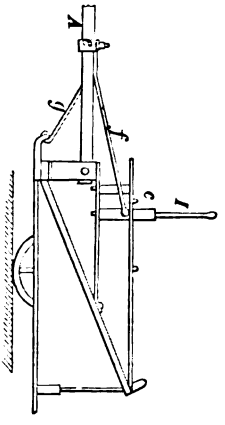

29940

29942

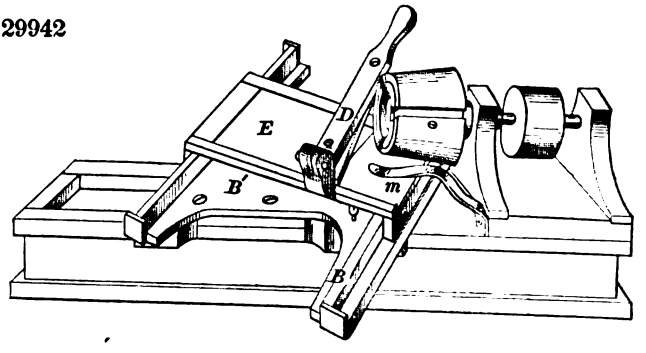

29943

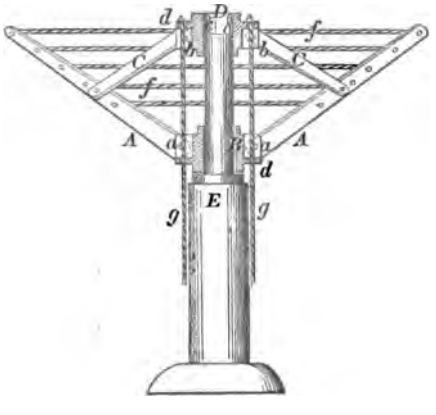

29939

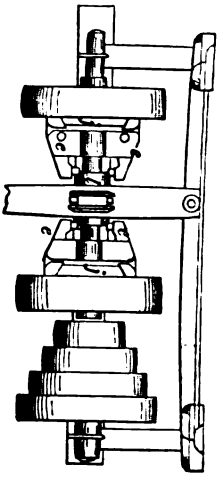

29945

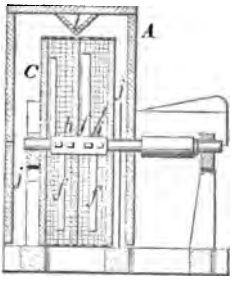

29946

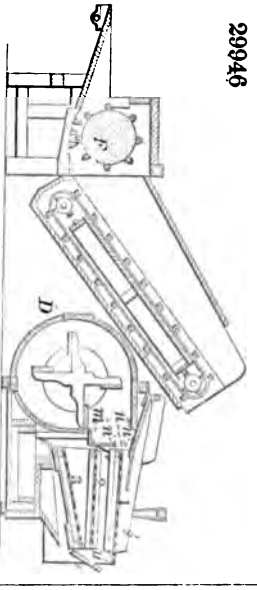

29947

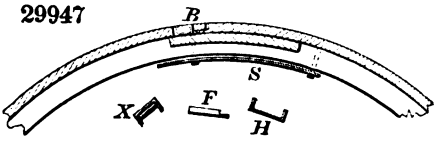

29949

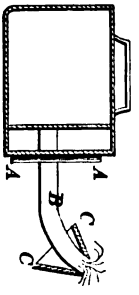

29948

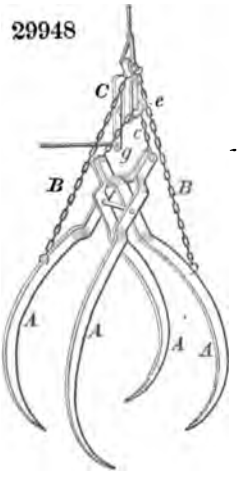

29950

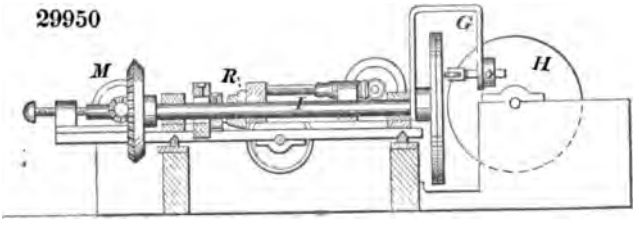

29951

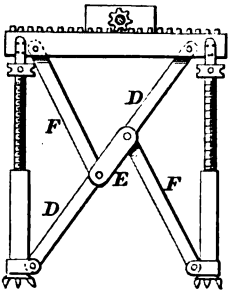

29952

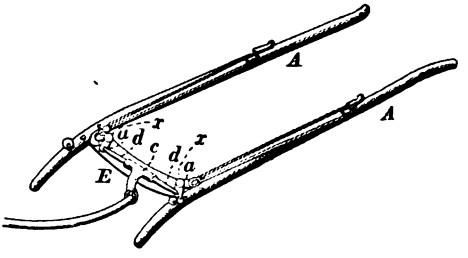

29953

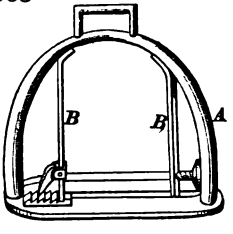

29954

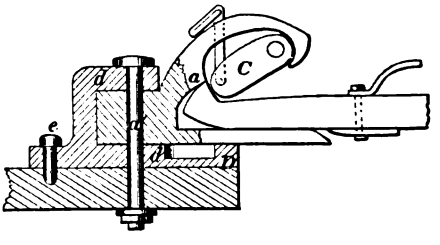

29955

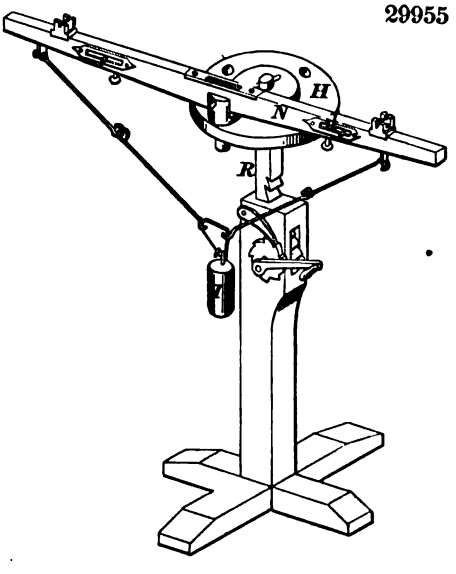

29956

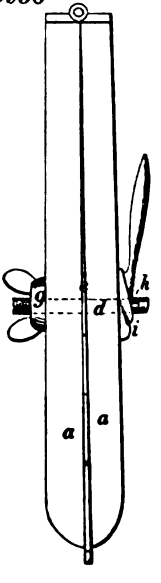

29957

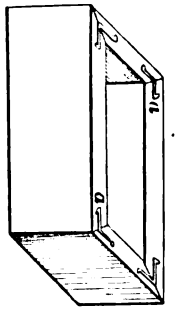

29958

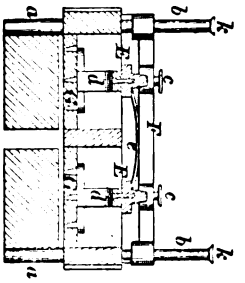

29959

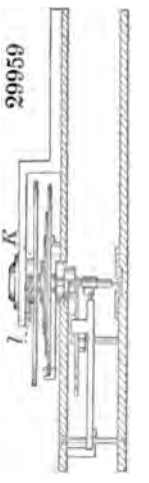

29960

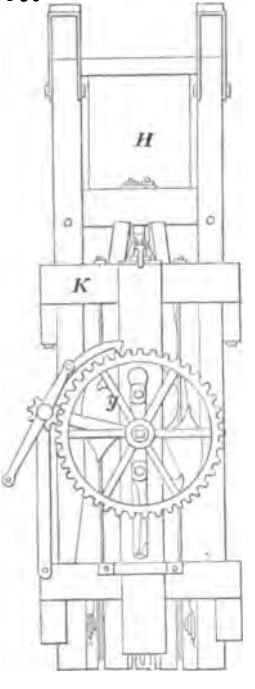

29961

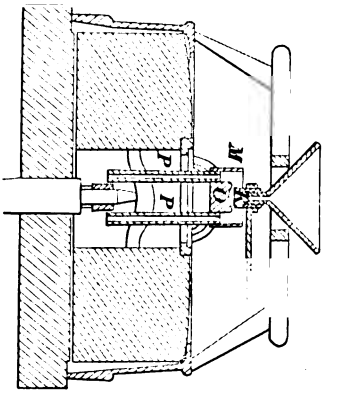

29962

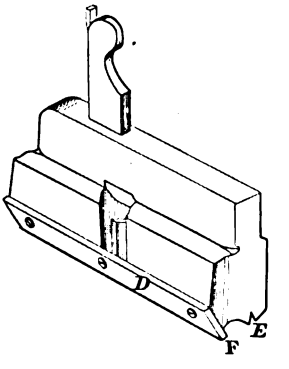

29963

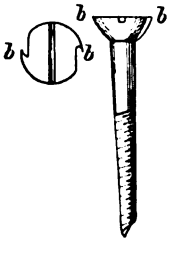

29964

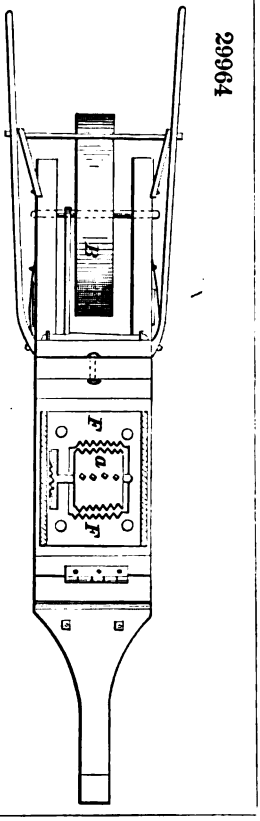

29965

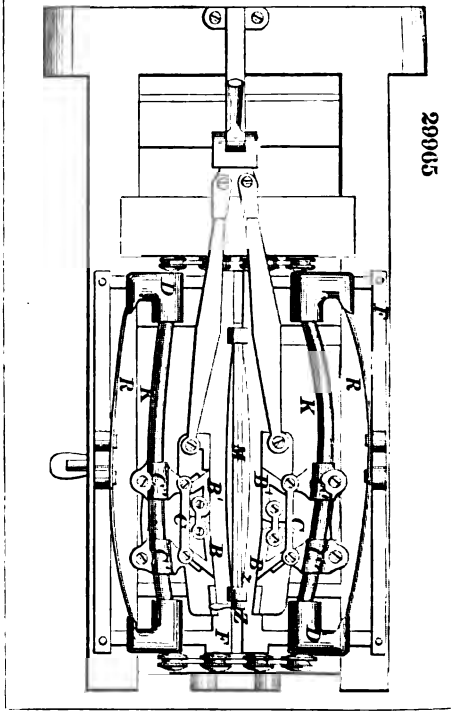

29966

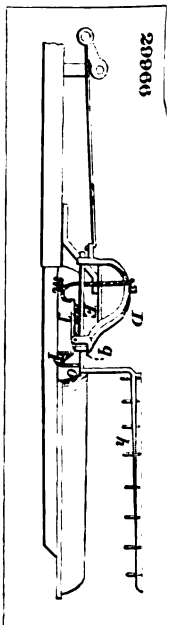

29967

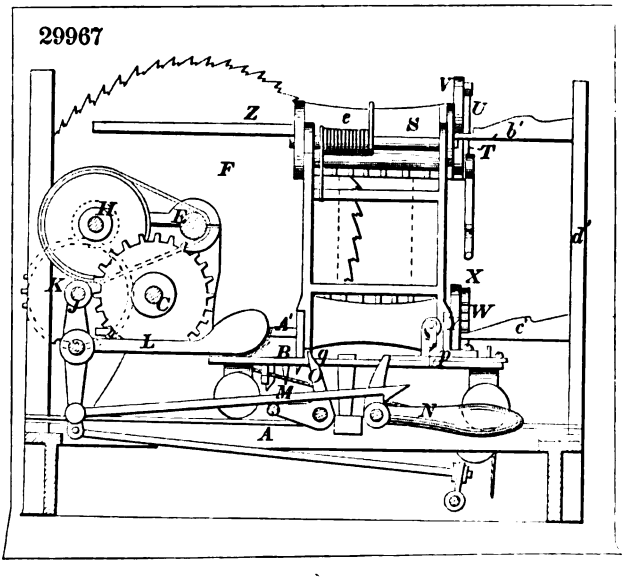

29968

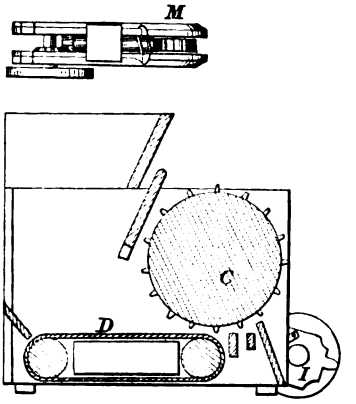

29969

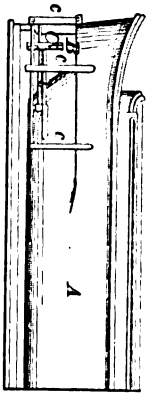

29970

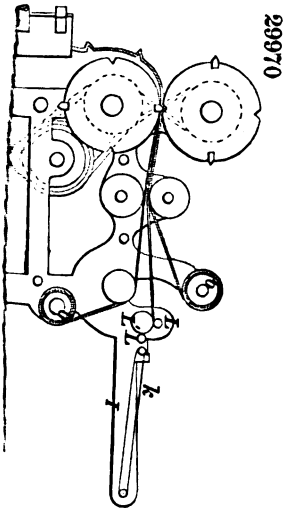

29971

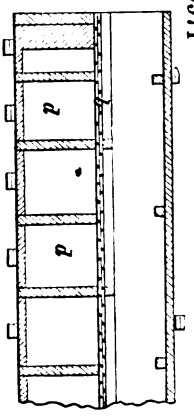

29972

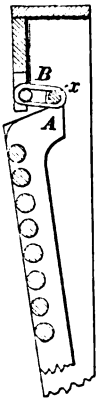

29973

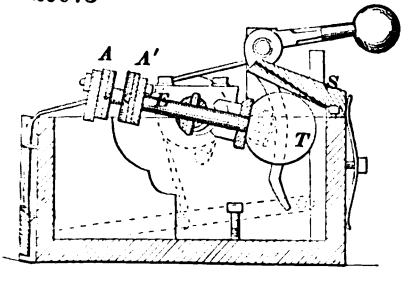

29974

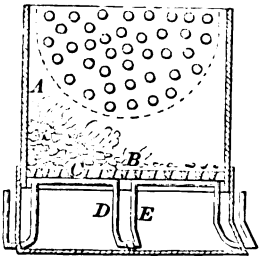

29975

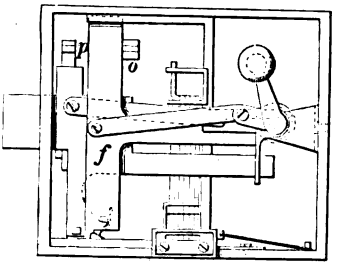

29976

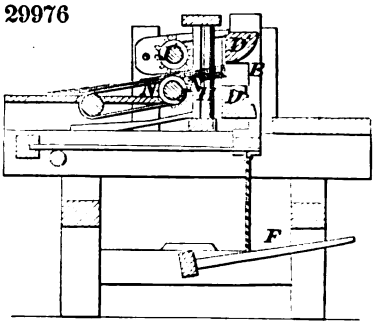

29977

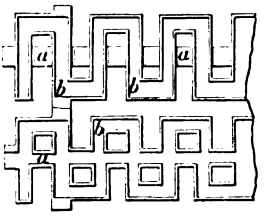

29978

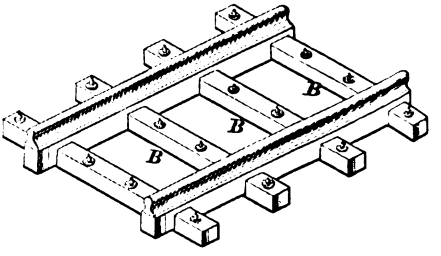

29980

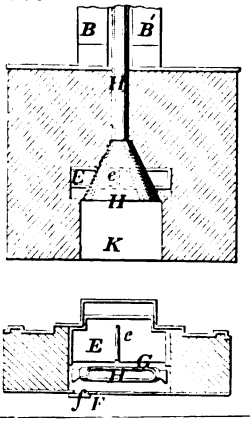

29981

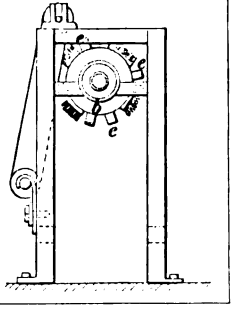

29982

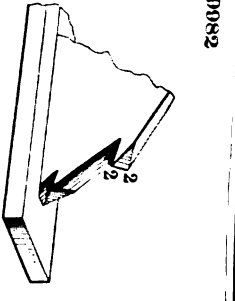

29984

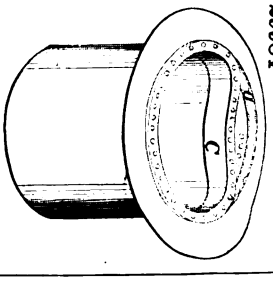

29983

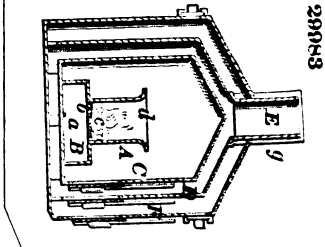

29985

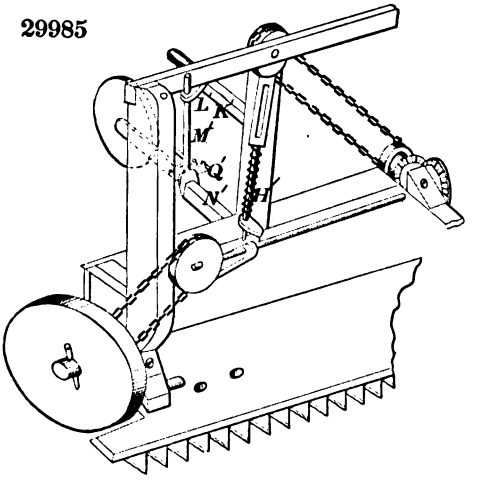

29986

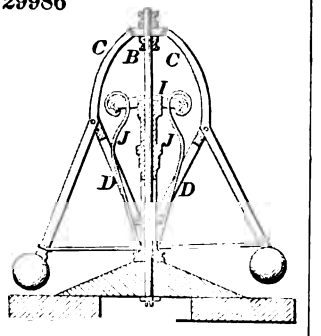

29988

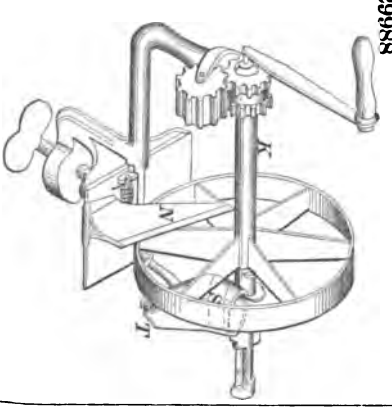

29987

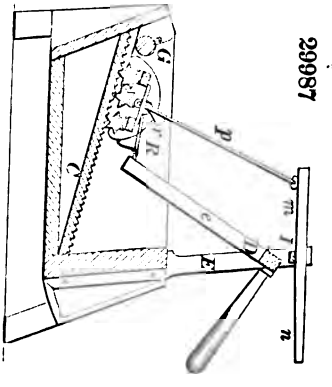

29989

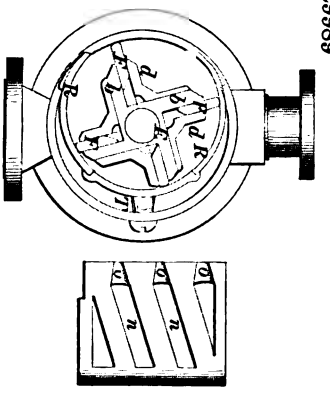

29990

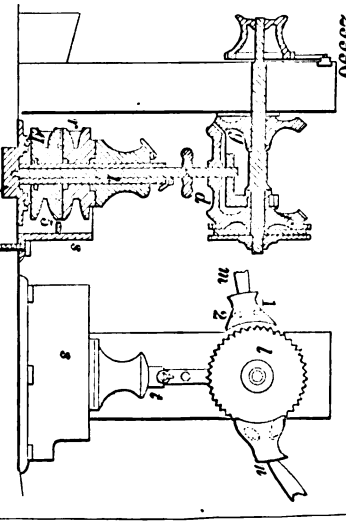

29991

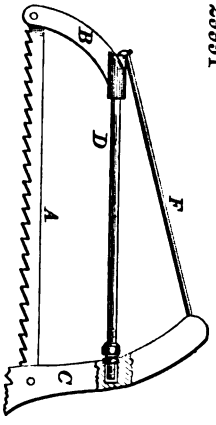

29992

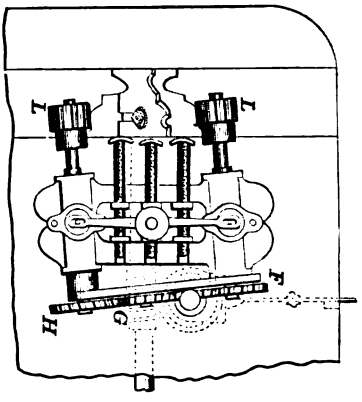

29993

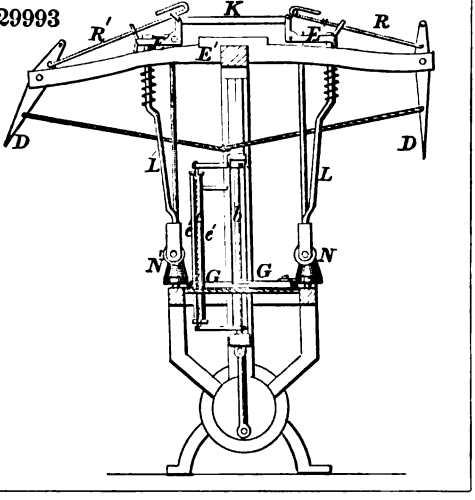

29994

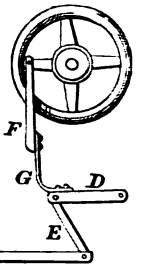

29995

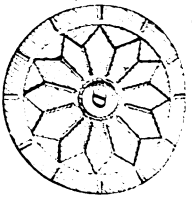

29996

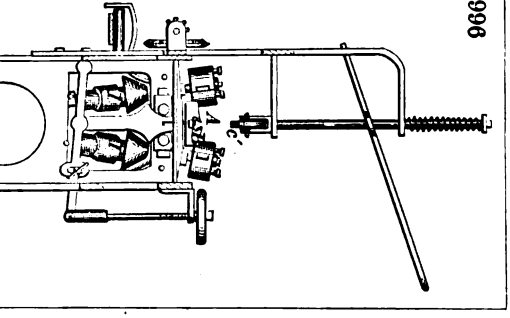

29997

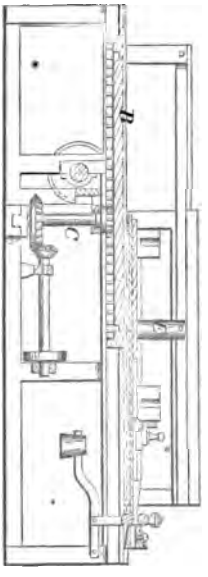

29998

30000

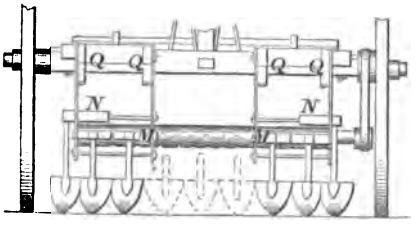

29999

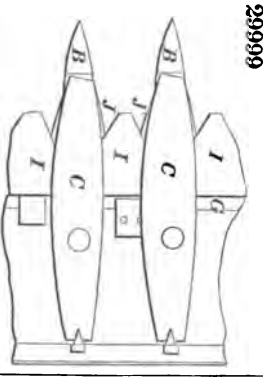

30002

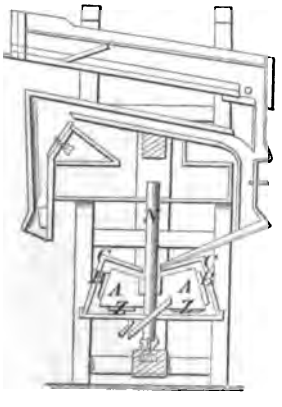

30001

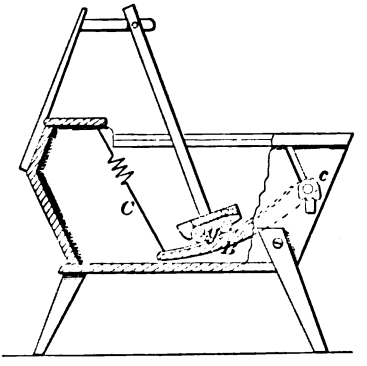

30003

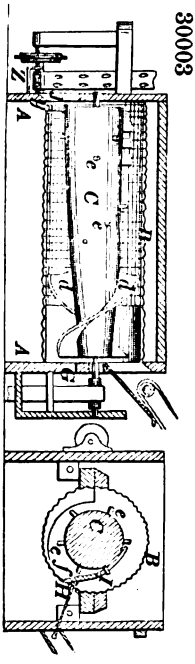

30004

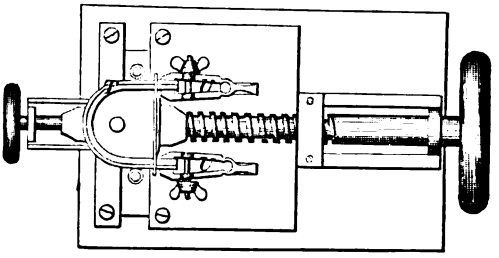

30005

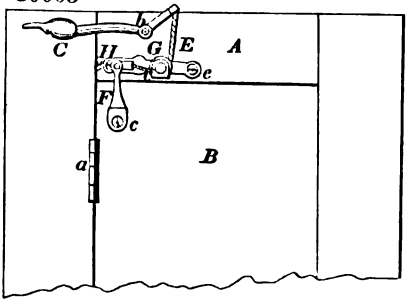

30006

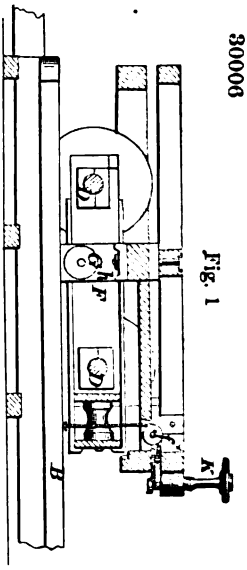

Fig. 1

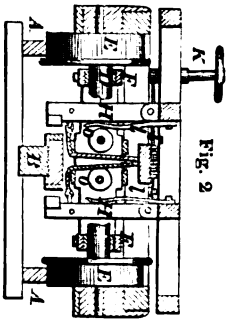

Fig. 2

30007

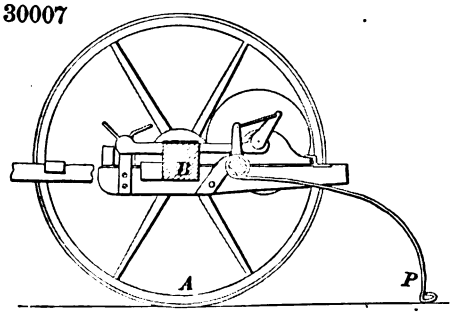

30008

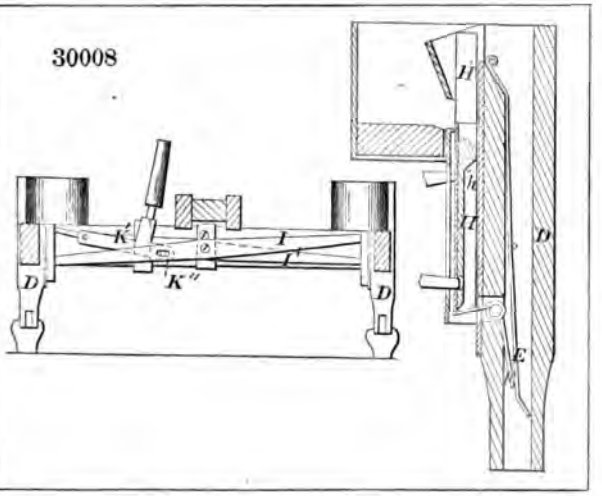

30009

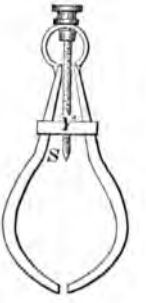

30010

30011

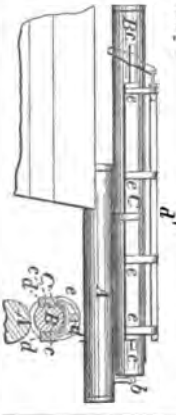

30013

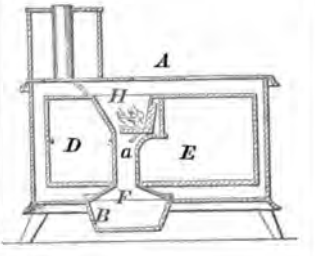

30014

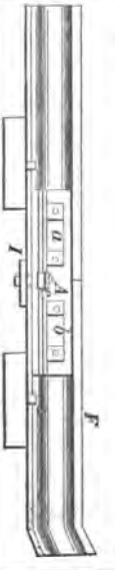

30012

Fig. 1

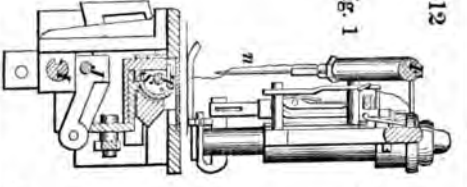

Fig. 2

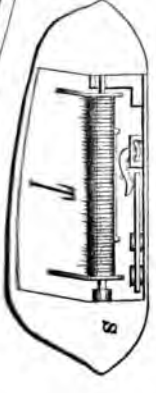

30015

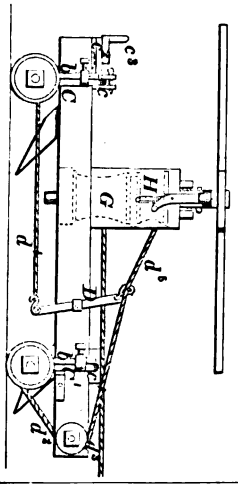

30017

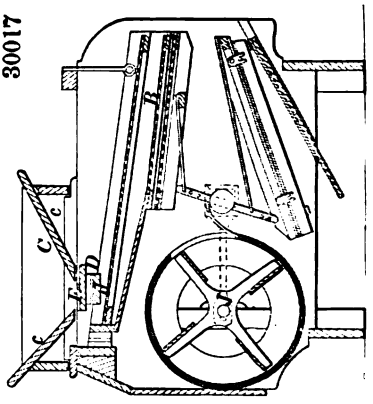

30016

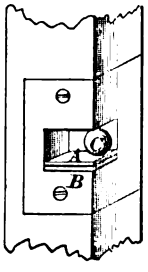

30018

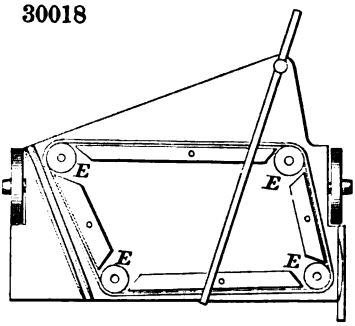

30019

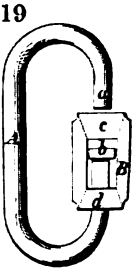

30020

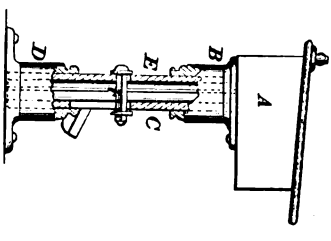

30022

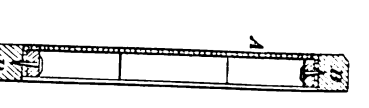

30021

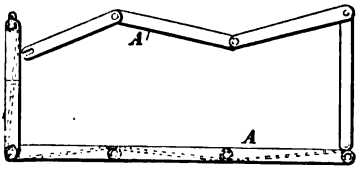

30023

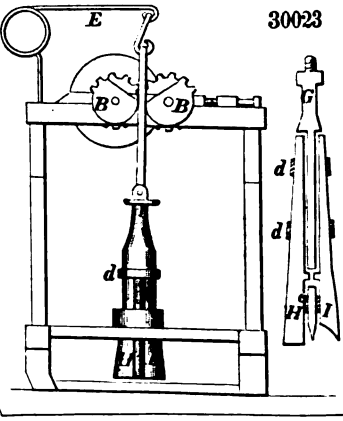

30024

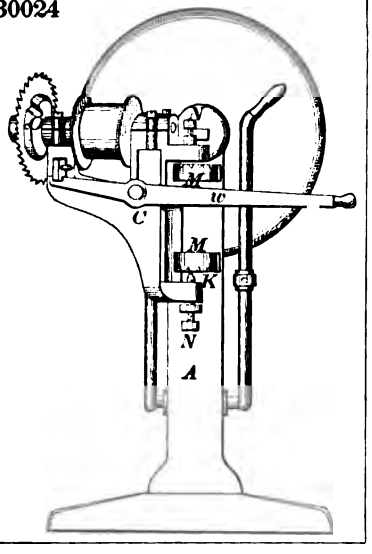

30026

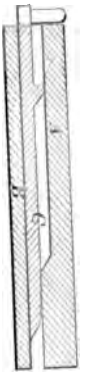

30025

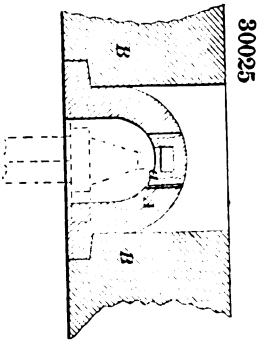

30029

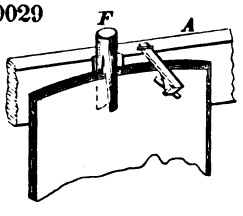

30028

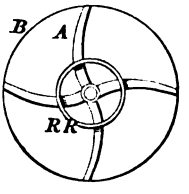

30027

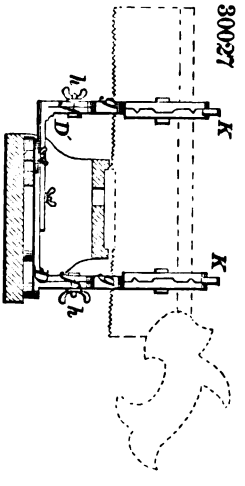

30031

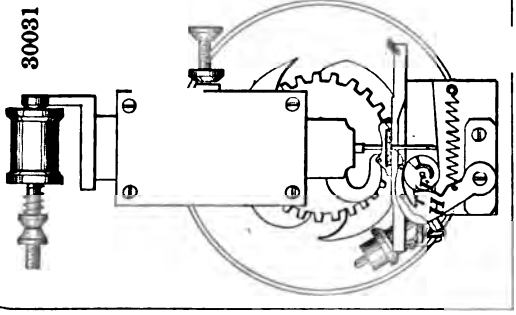

30030

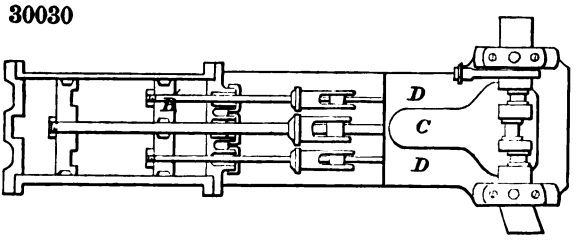

30032

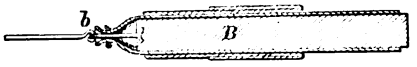

30033

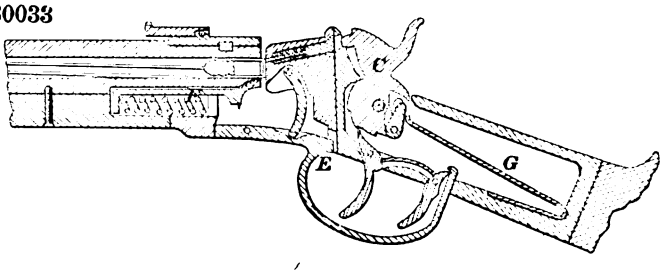

30034

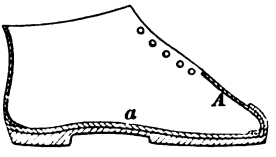

30035

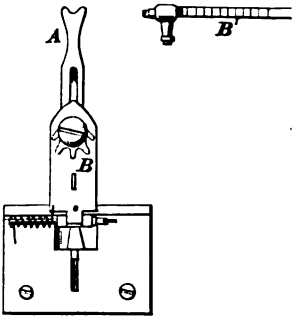

30037

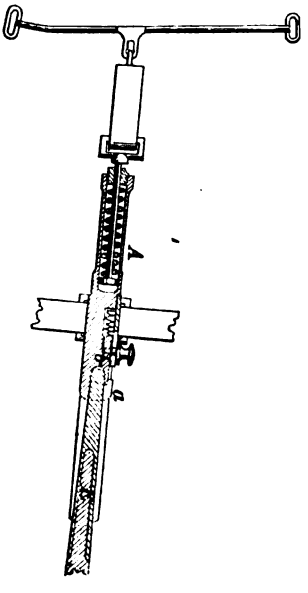

30036

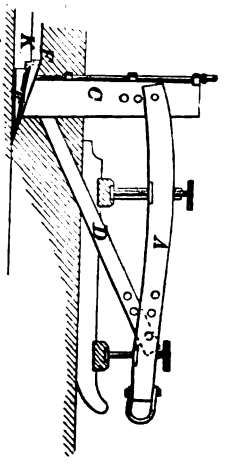

30038

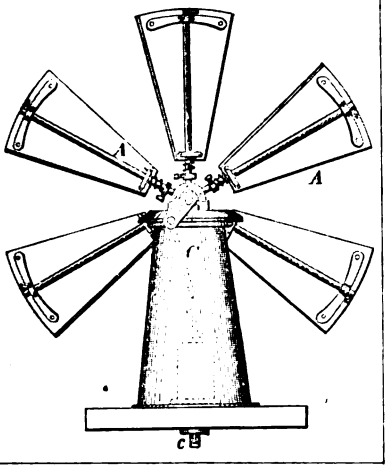

30039

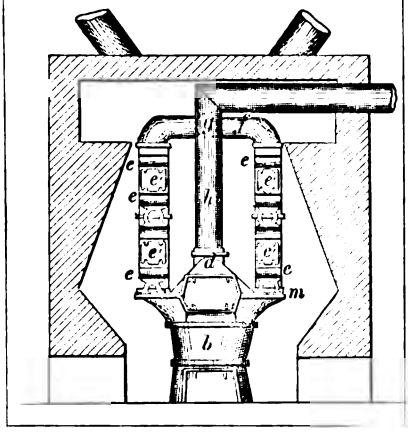

30040

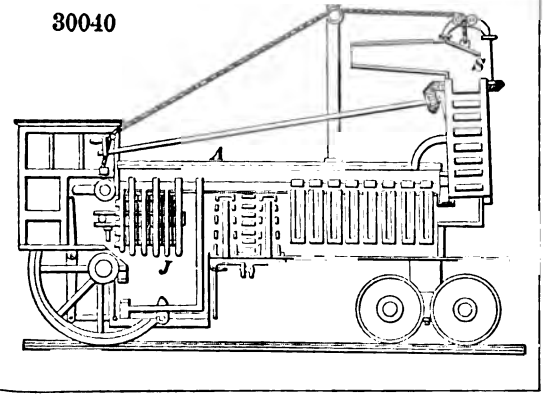

30041

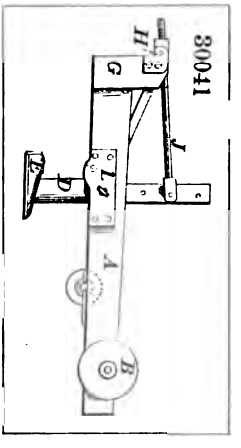

30042

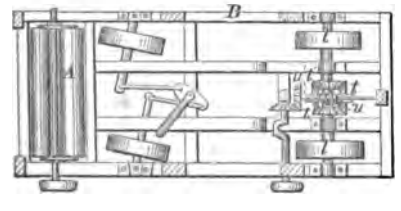

30043

30044

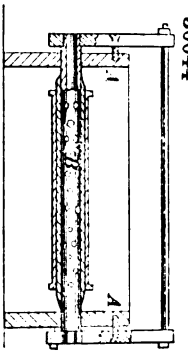

30045

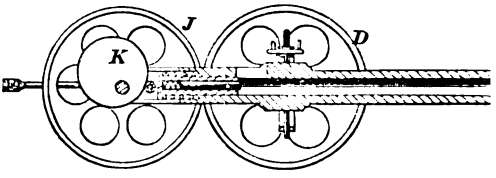

30046

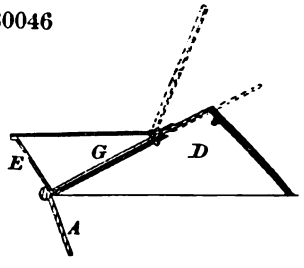

30047

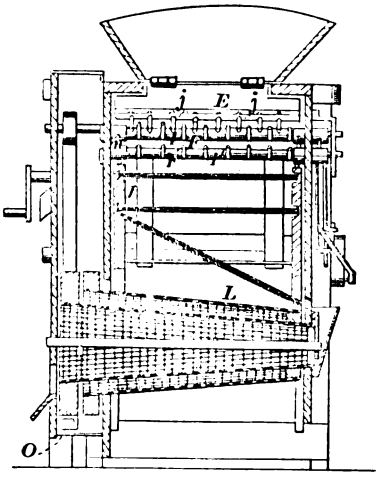

30048

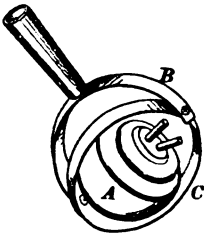

30049

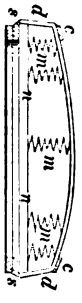

30051

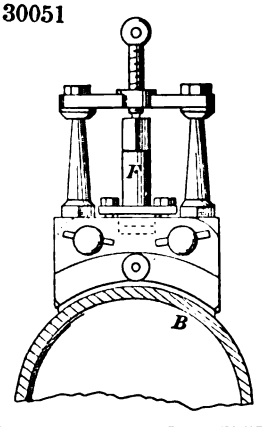

30052

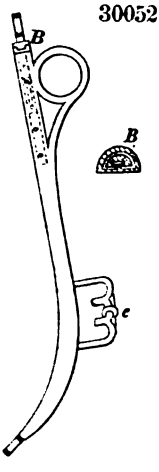

30053

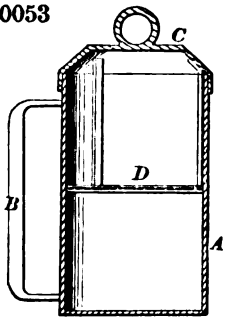

30054

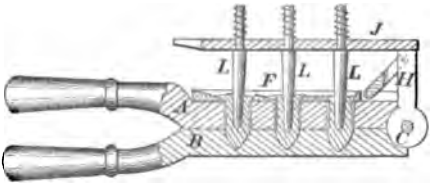

30056

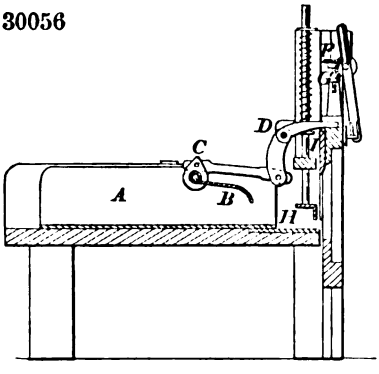

30055

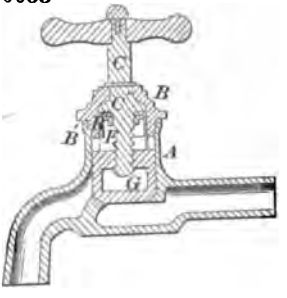

30058

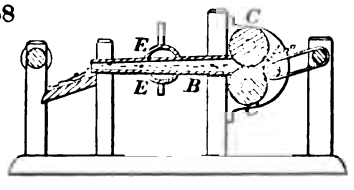

30059

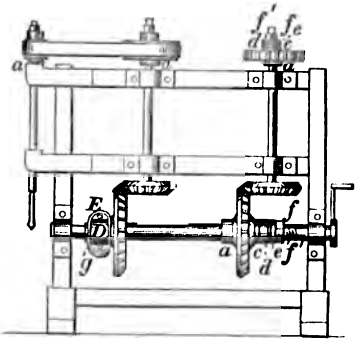

30057

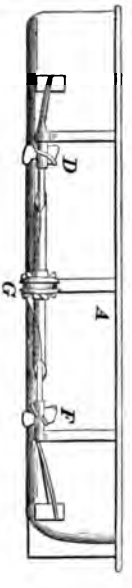

30060

Fig. 1

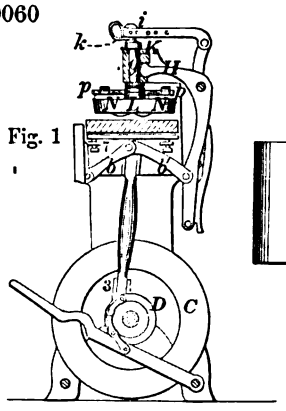

Fig. 2

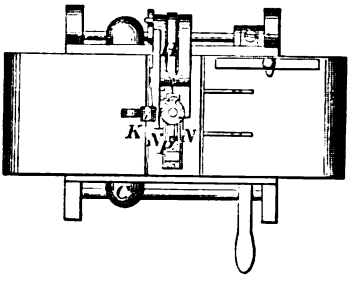

30061

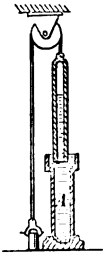

30062

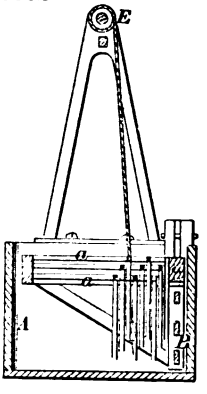

30063

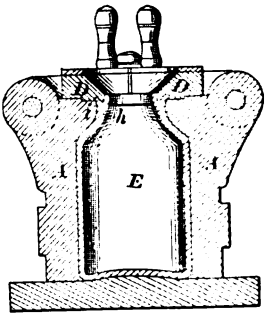

30064

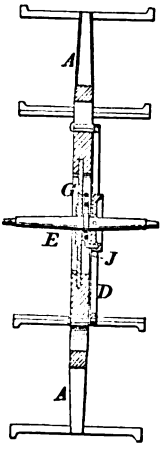

30065

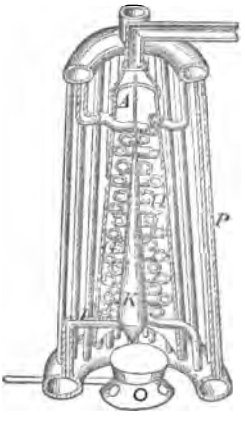

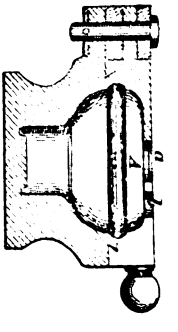

30067

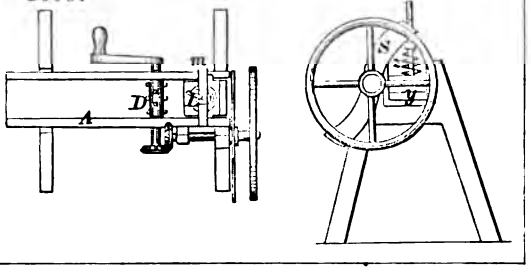

30068

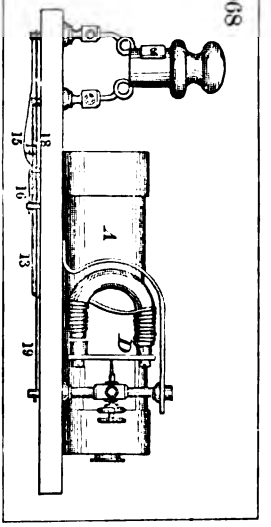

30069

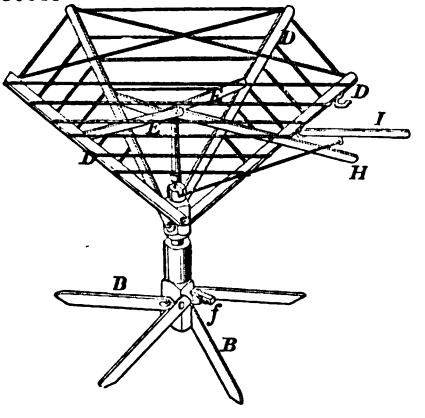

30070

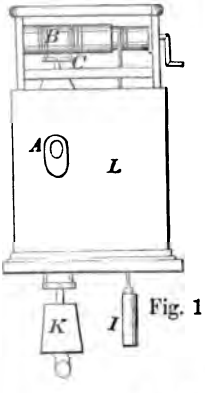

Fig. 1

Fig. 2

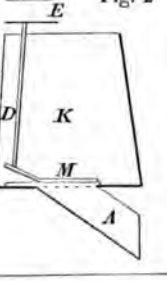

30071

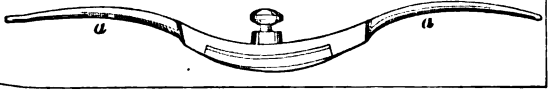

30072

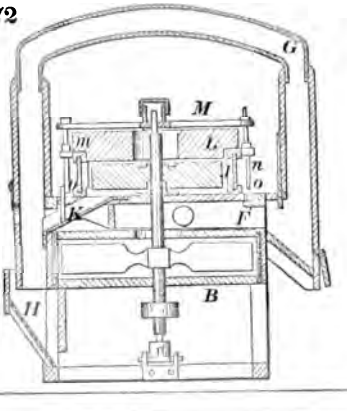

30073

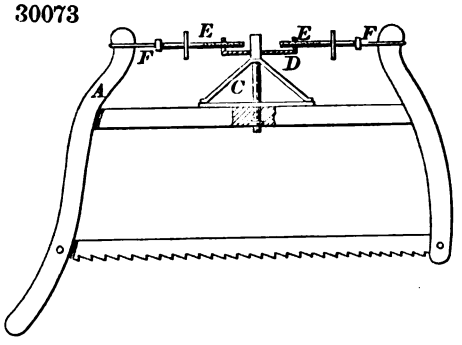

30074

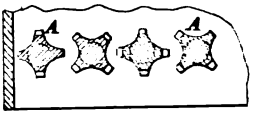

30076

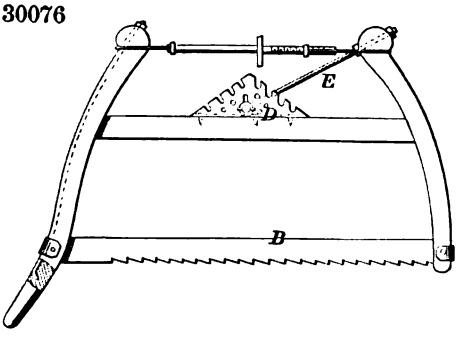

30075

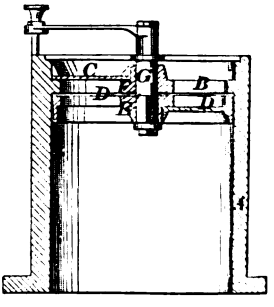

30079

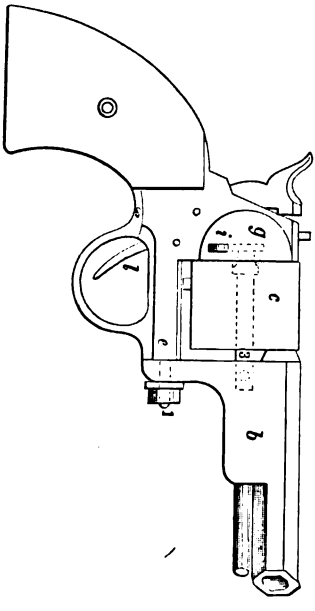

30077

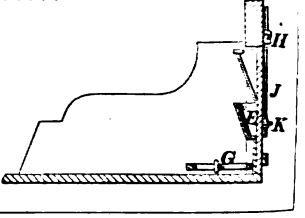

30078

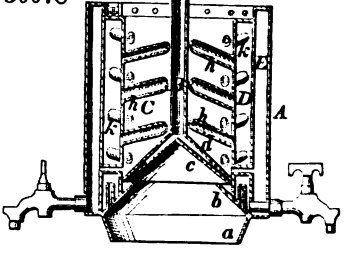

30080

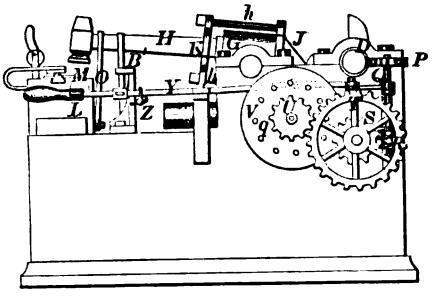

30082

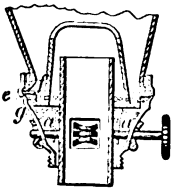

30083

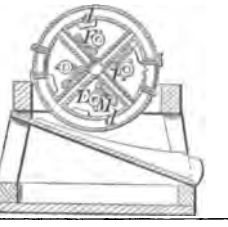

30081

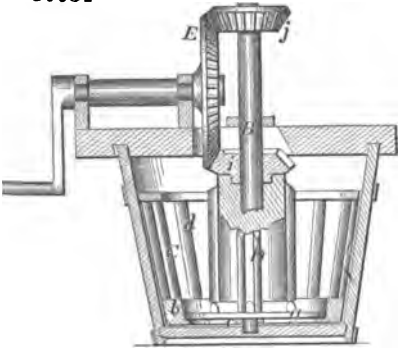

30084

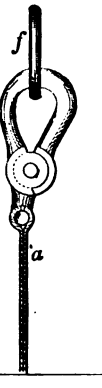

30085

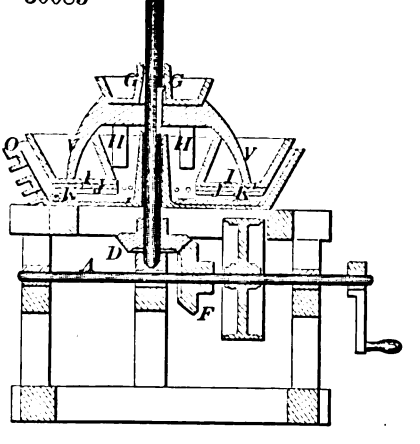

30086

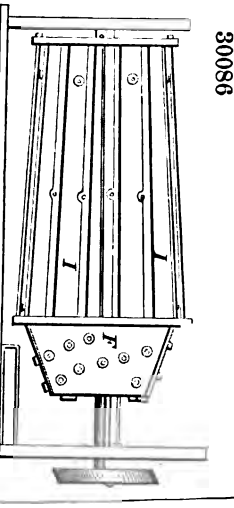

30087

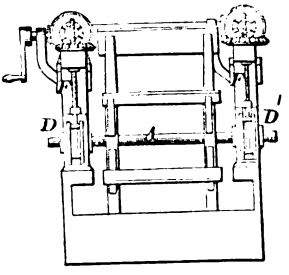

30088

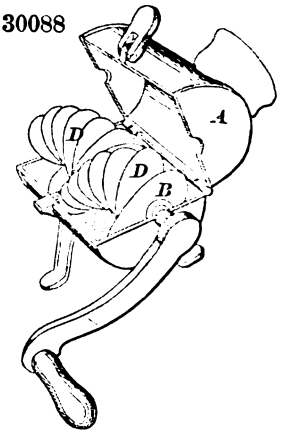

30089

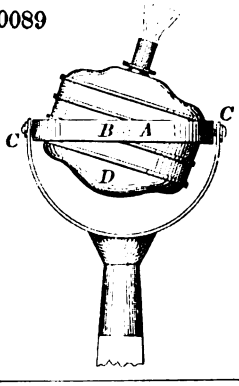

30090

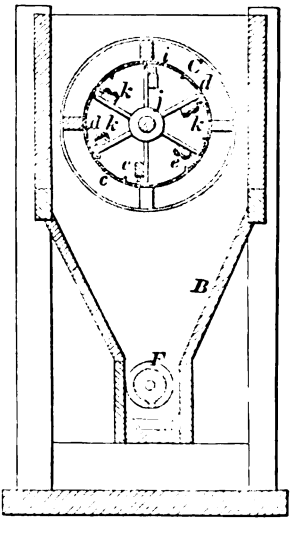

30094

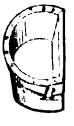

30091

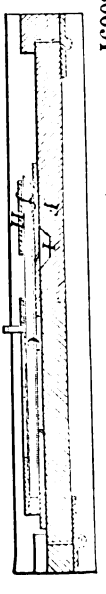

30093

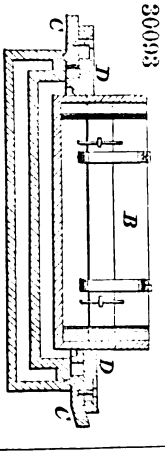

30092

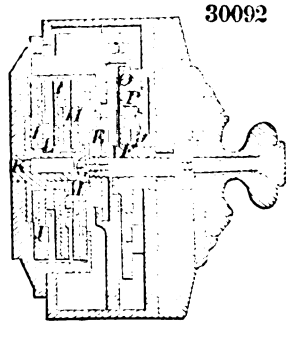

30095

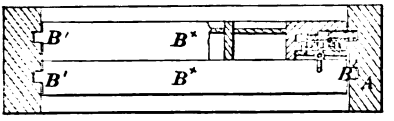

Fig. 1

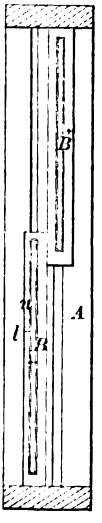

Fig. 2

30097

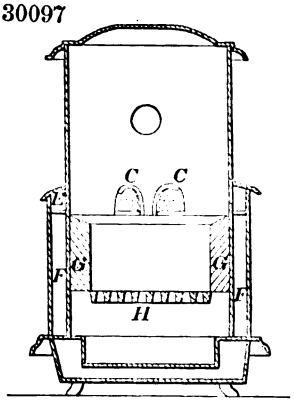

30098

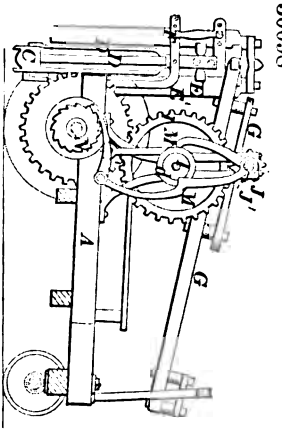

30099

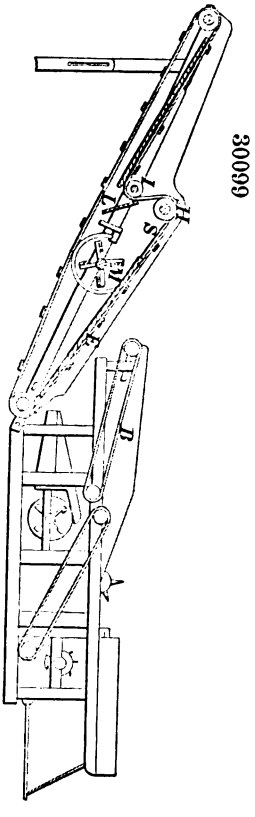

30096

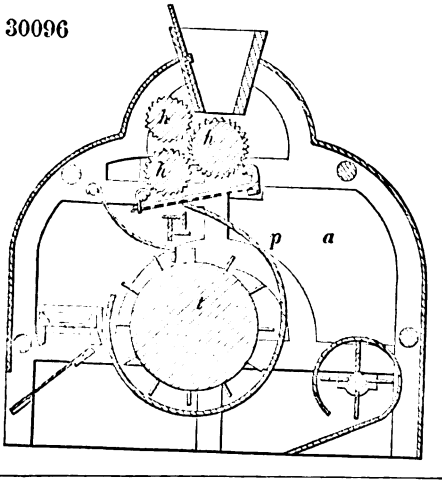

30100

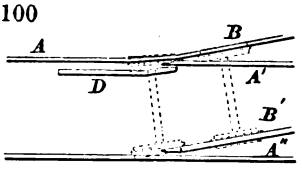

30101

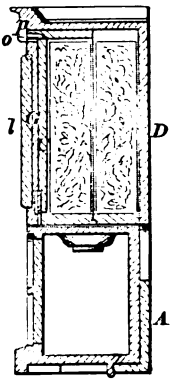

30102

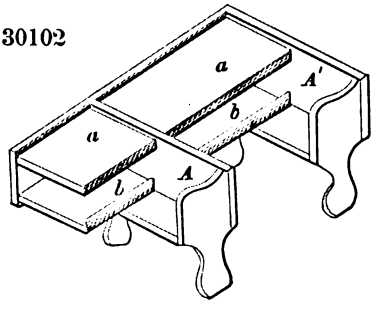

30106

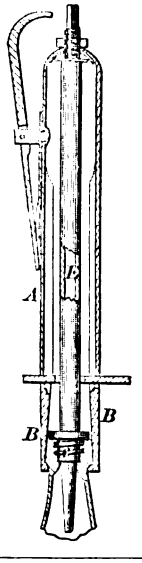

30104

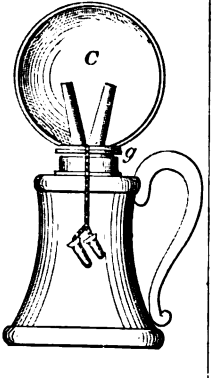

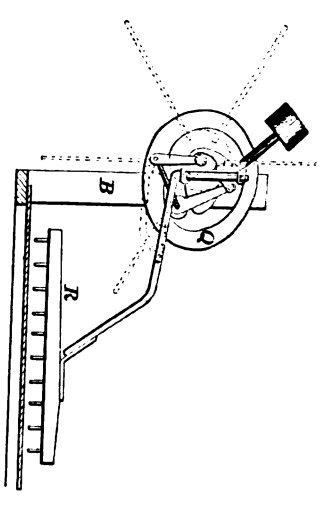

30105

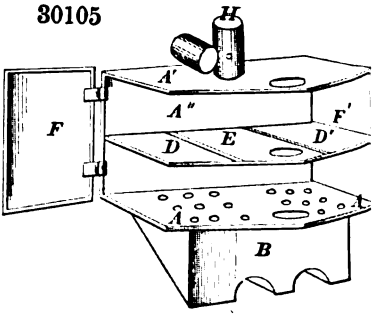

30107

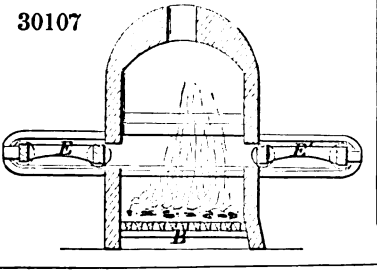

30109

30110

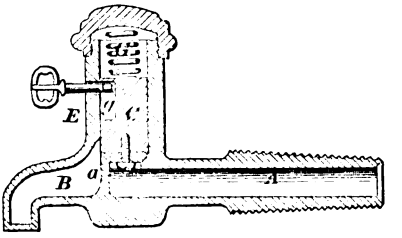

30111

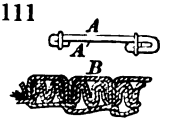

30112

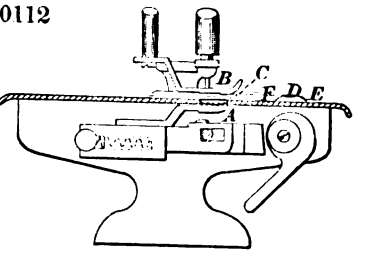

30113

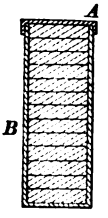

30114 Fig. 1

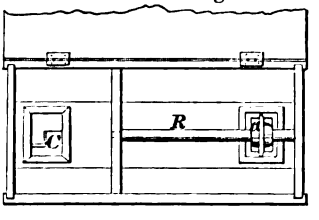

Fig. 2

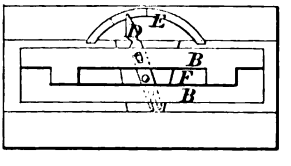

30115

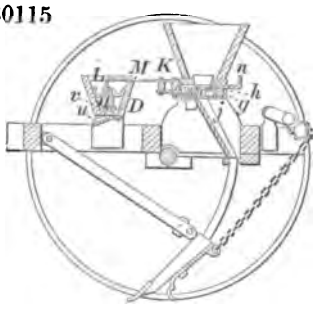

30116

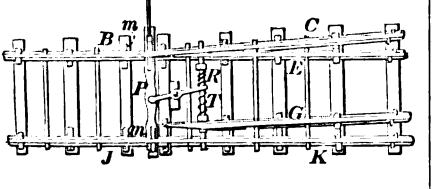

30117

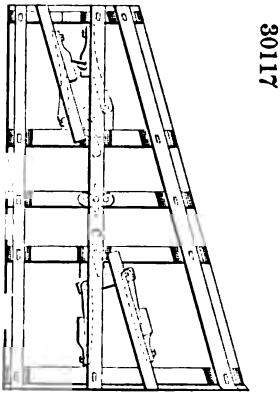

30118

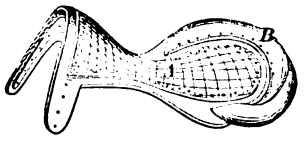

30119

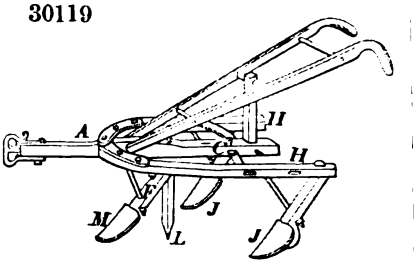

30120

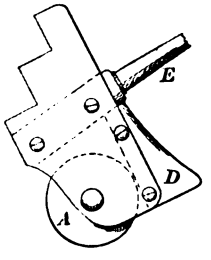

30121

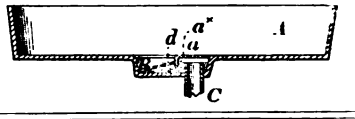

30124

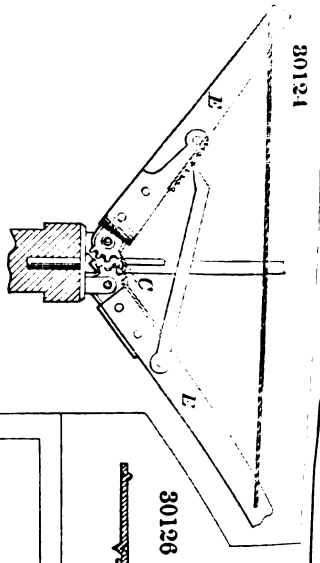

30122

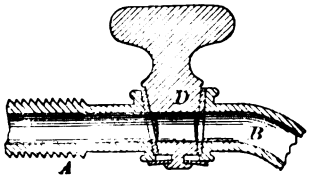

30123

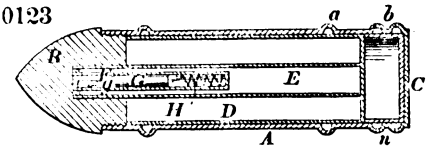

30126

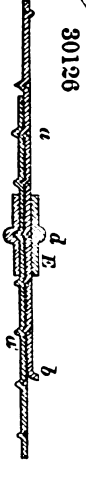

30125

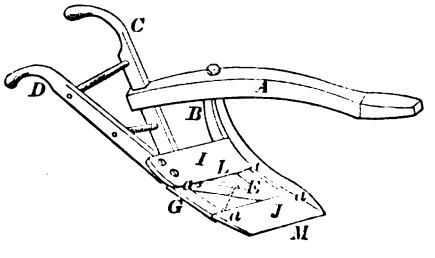

30127

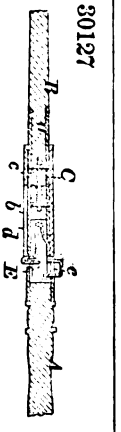

30129

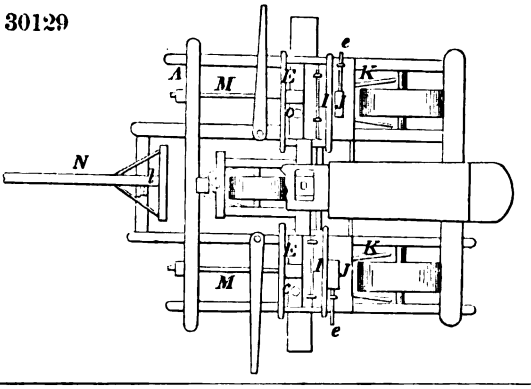

30131

Fig. 1

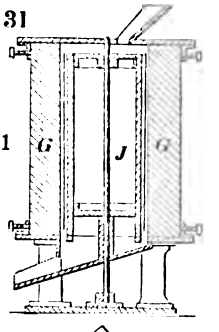

Fig. 2

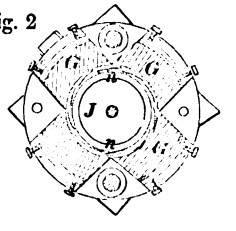

30130

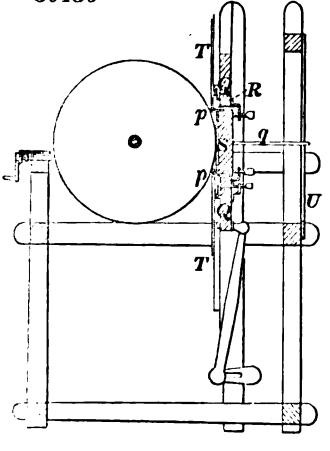

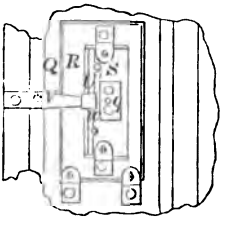

30132

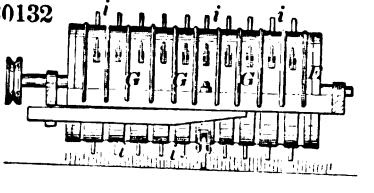

30133

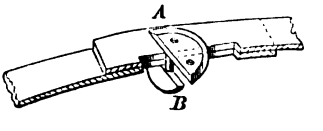

30134

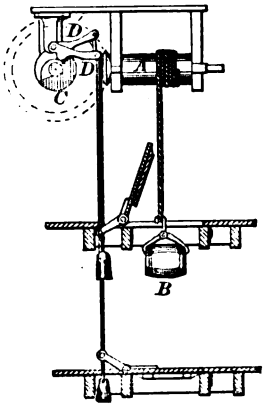

30135

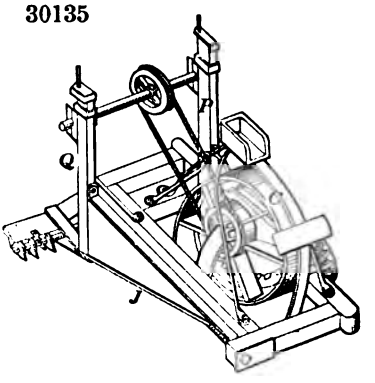

30136

Fig. 1

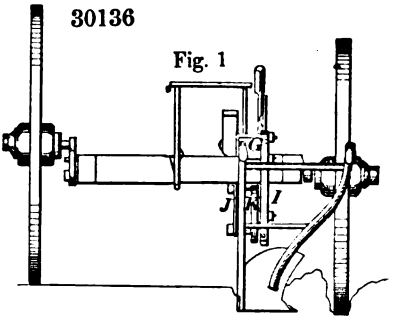

Fig. 2

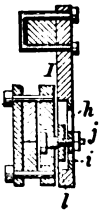

30137

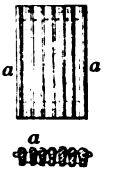

30138

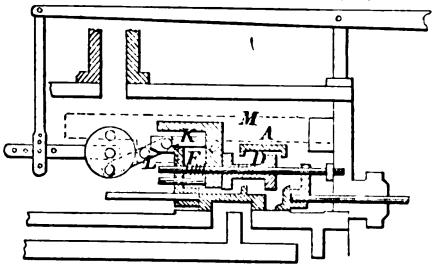

30139

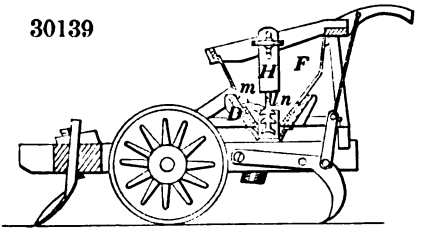

30140

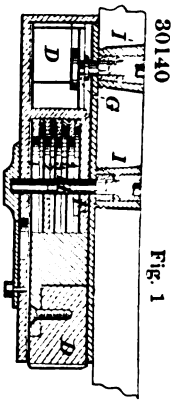

Fig. 1

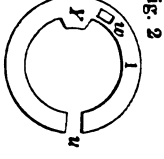

Fig. 2

30141

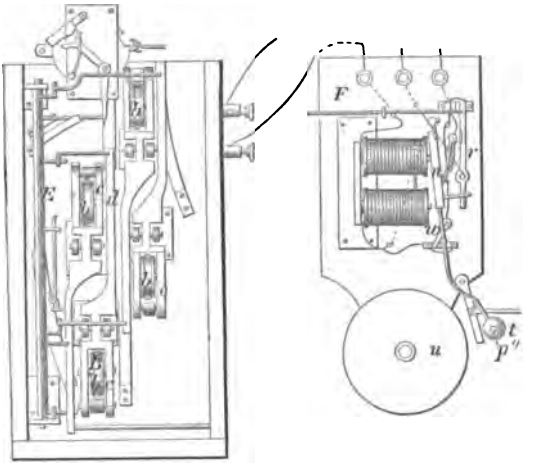

30142

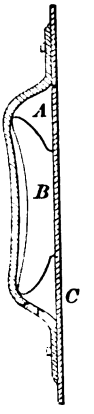

30143

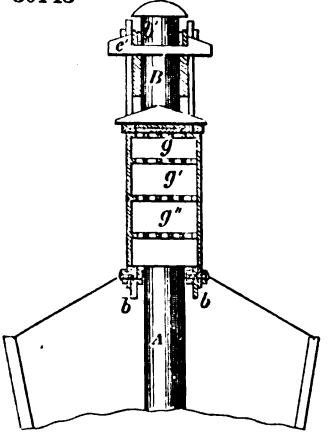

30144

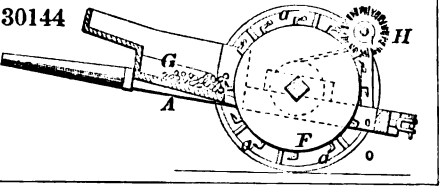

30145

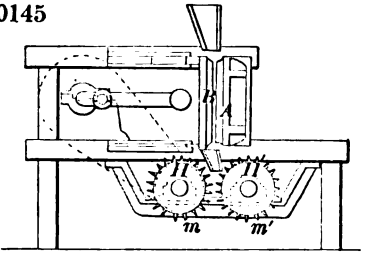

30148

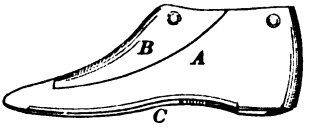

30146

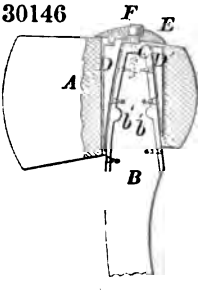

30149

Fig. 1

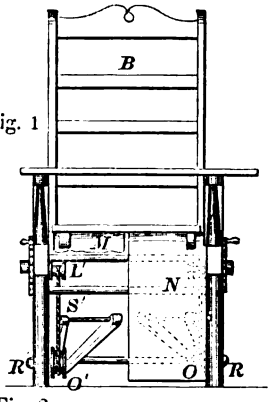

Fig. 2

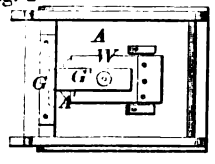

30150

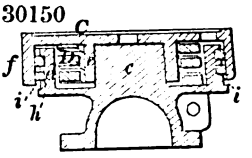

30151

30152

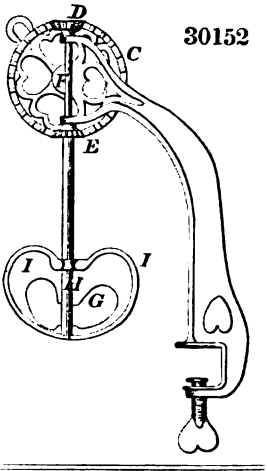

30153

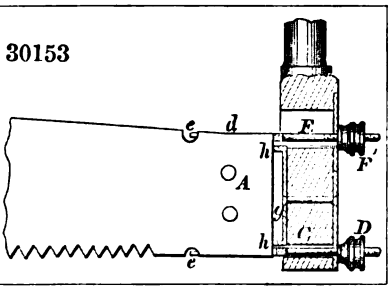

30154

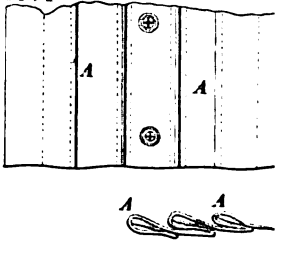

30156

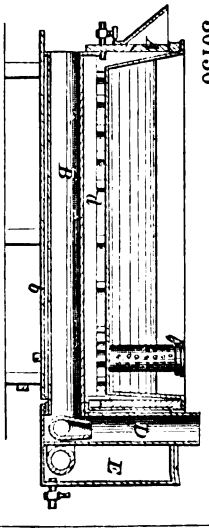

30155

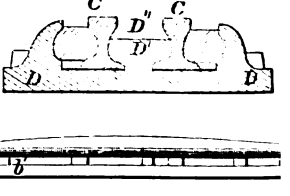

30157

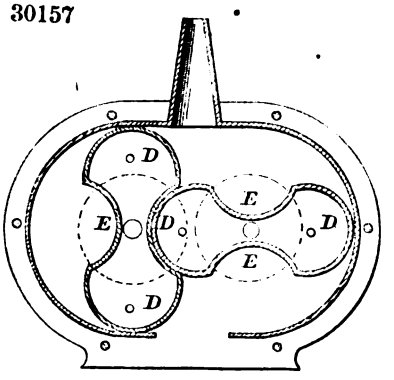

30158

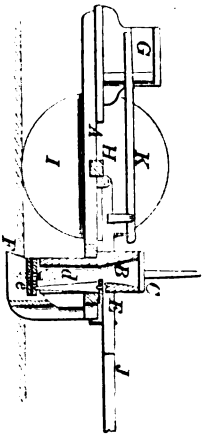

30159

30160

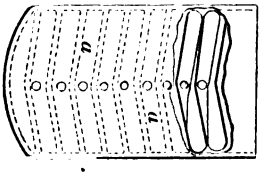

30161

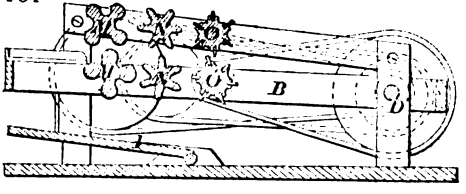

30162

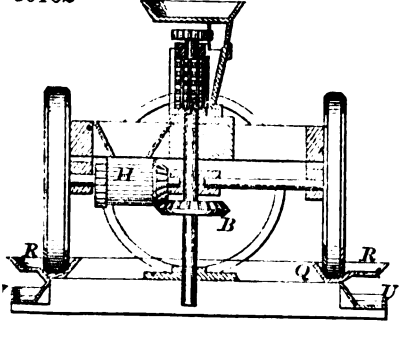

30163

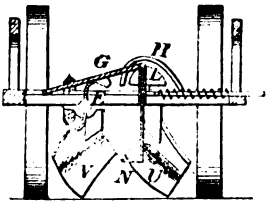

30100

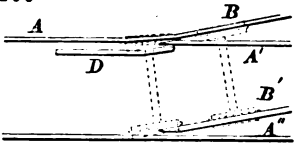

30101

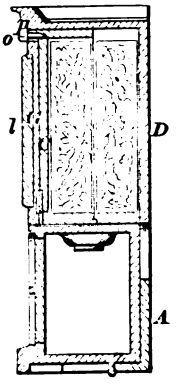

30102

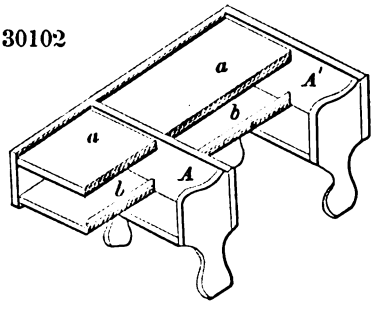

30103

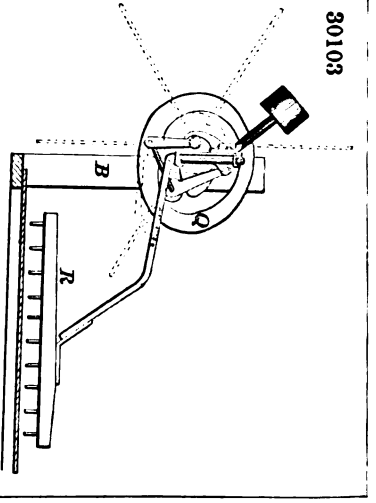

30104

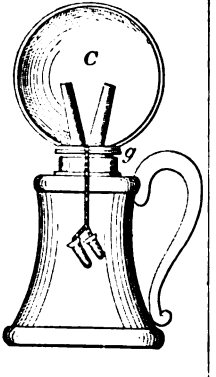

30106

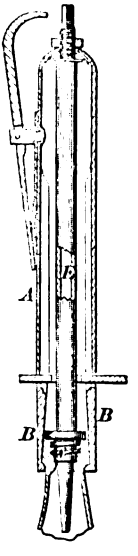

30105

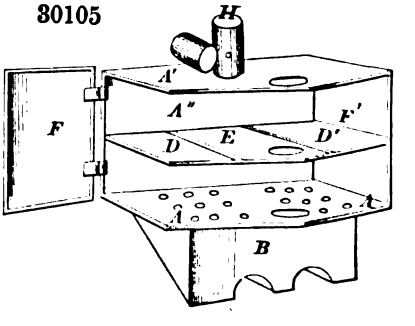

30107

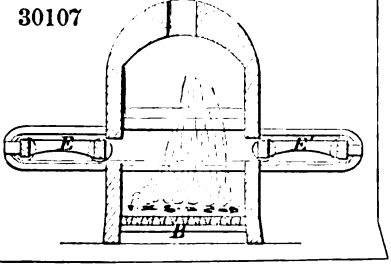

30109

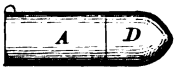

30110

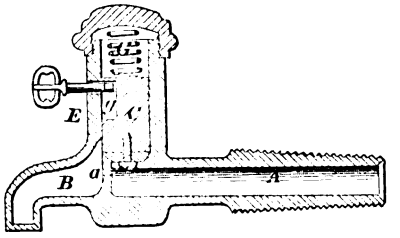

30111

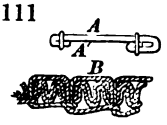

30112

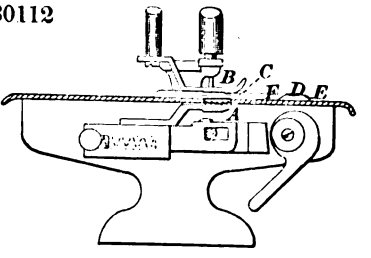

30113

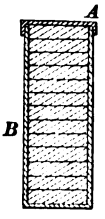

30114 Fig. 1

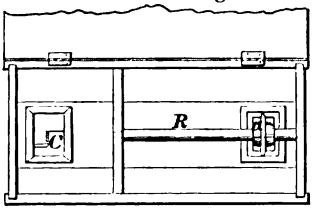

Fig. 2

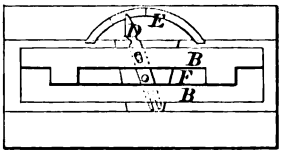

30115

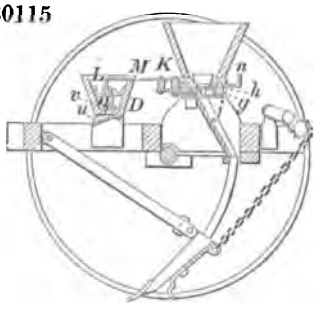

30116

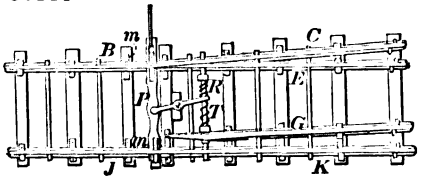

30117

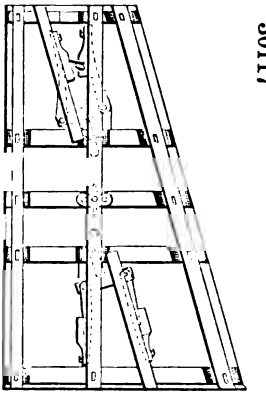

30118

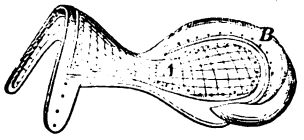

30119

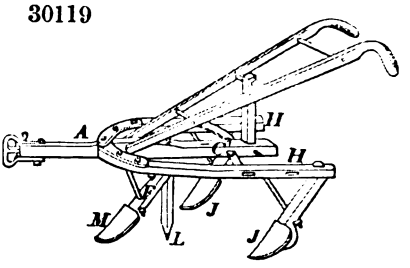

30120

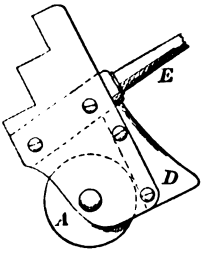

30121

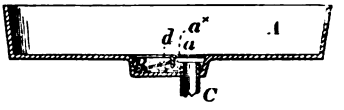

30122

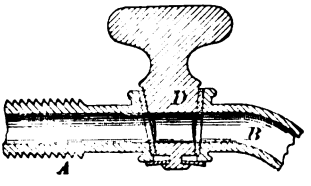

30124

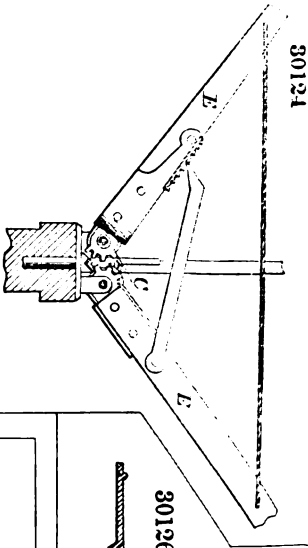

30123

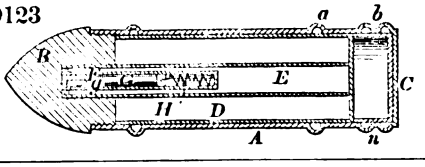

30125

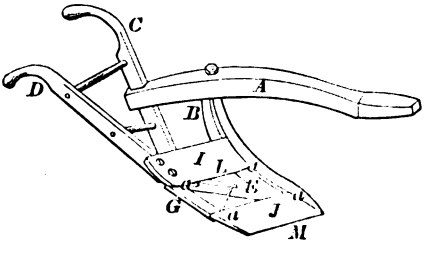

30126

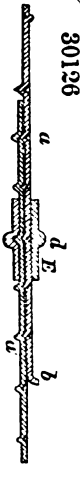

30127

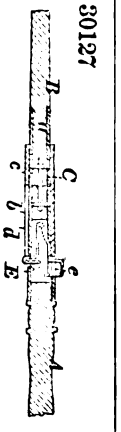

30129

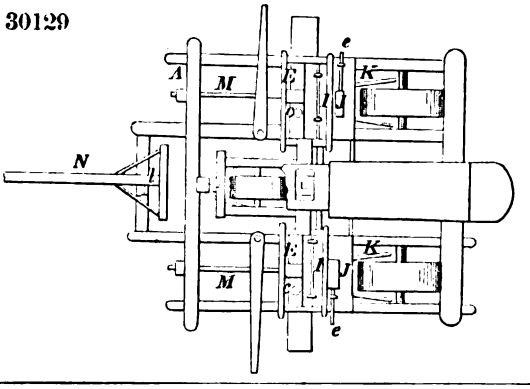

30131

Fig. 1

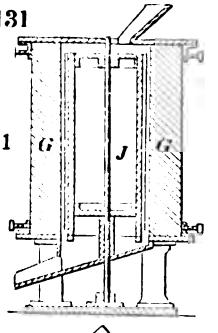

Fig. 2

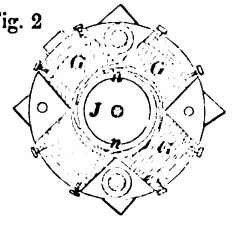

30130

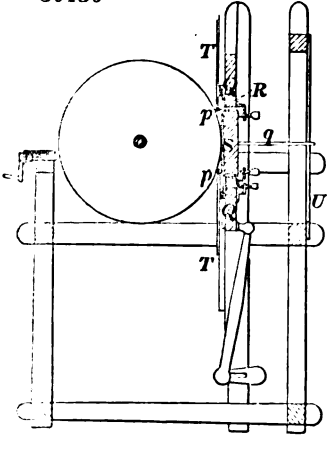

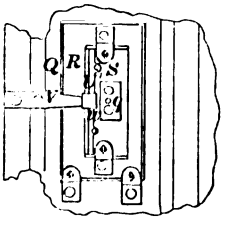

30132

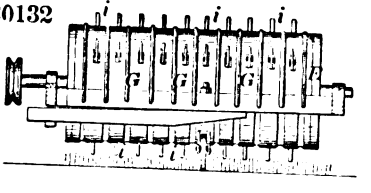

30133

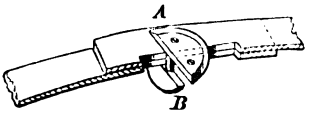

30134

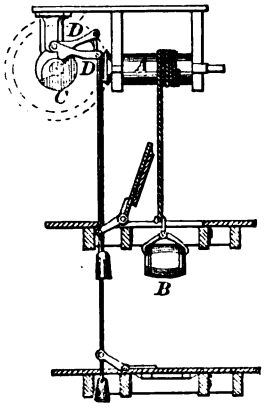

30135

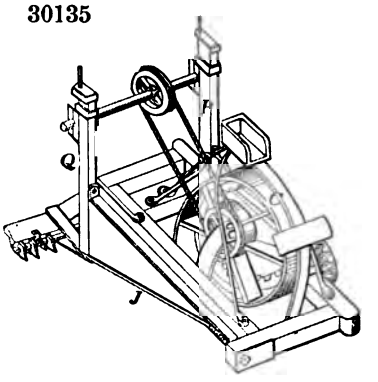

30136

Fig. 1

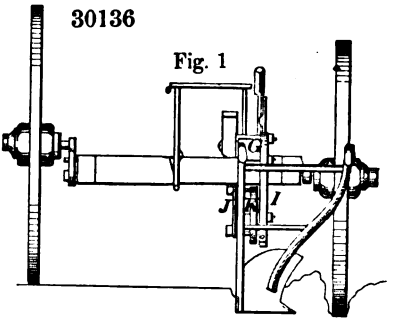

Fig. 2

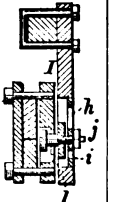

30137

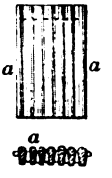

30138

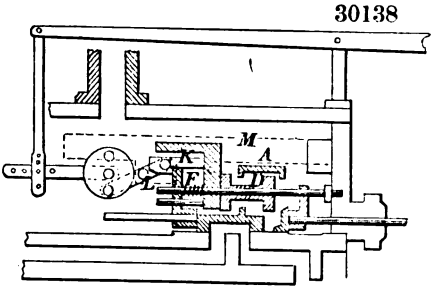

30139

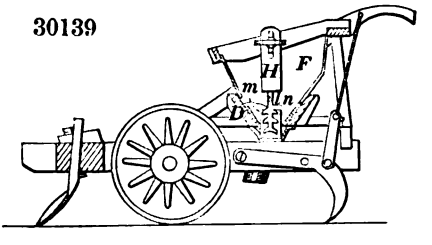

30140

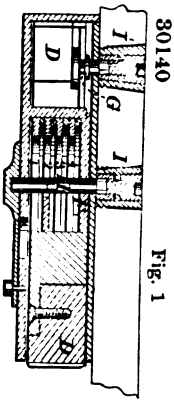

Fig. 1

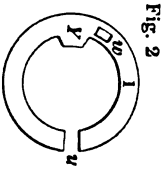

Fig. 2

30141

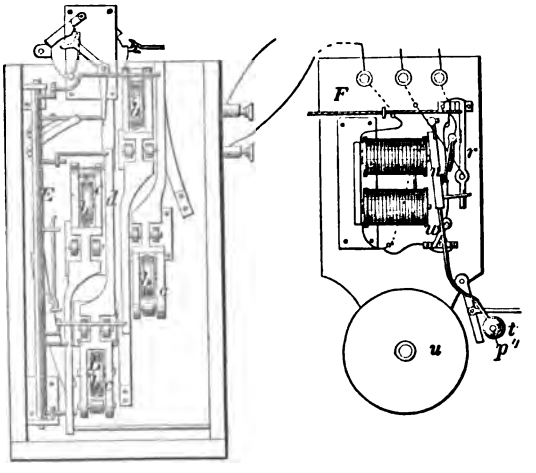

30142

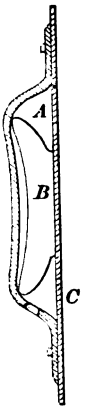

30143

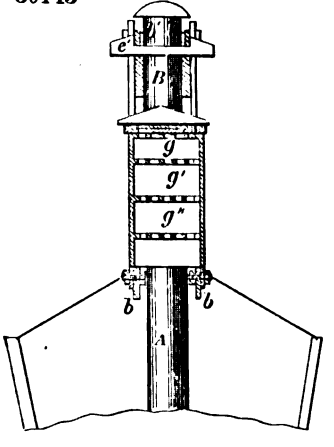

30144

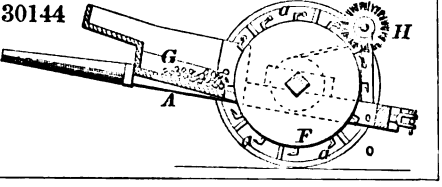

30145

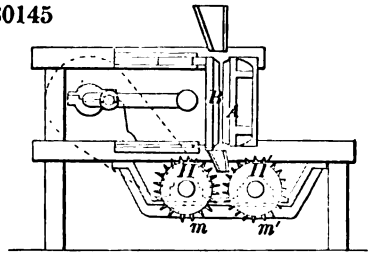

30148

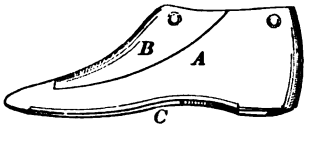

30146

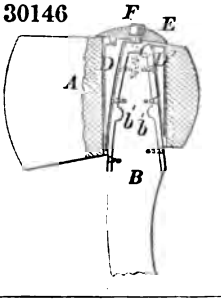

30149

Fig. 1

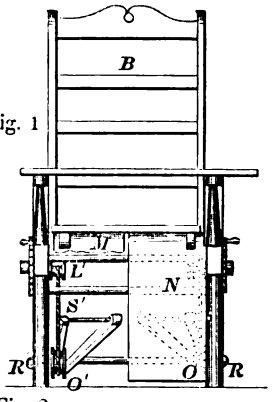

Fig. 2

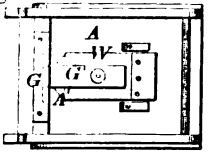

30150

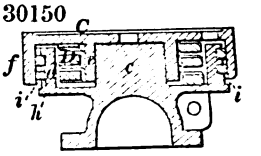

30151

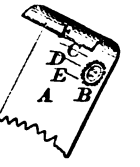

30152

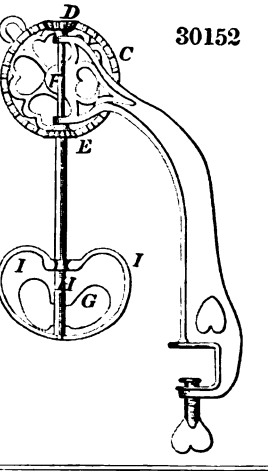

30153

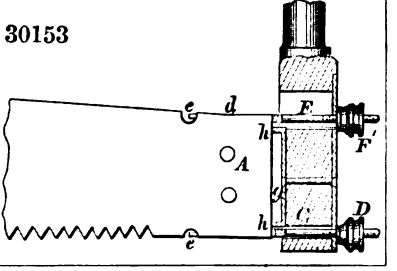

30154

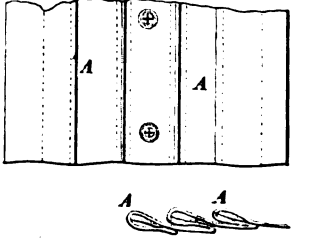

30155

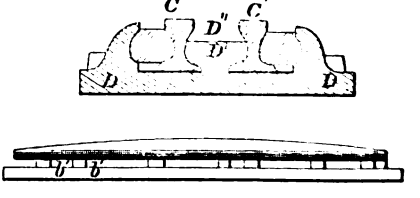

30156

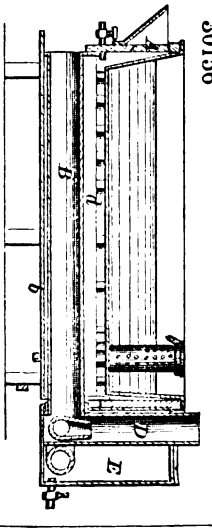

30157

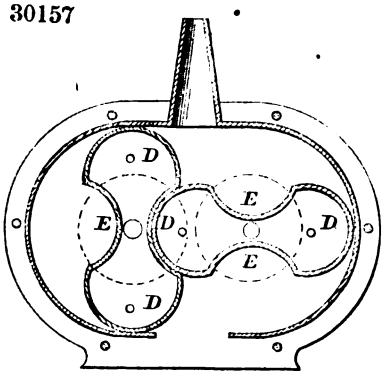

30158

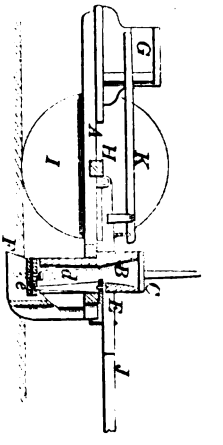

30159

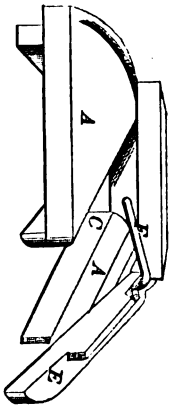

30160

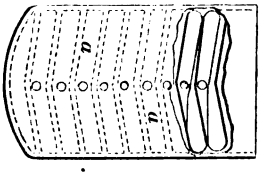

30161

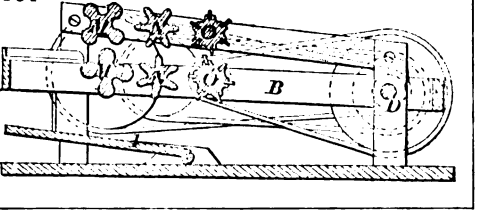

30162

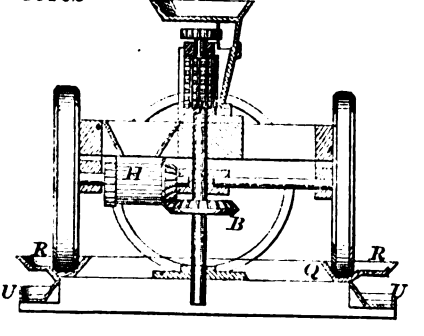

30163

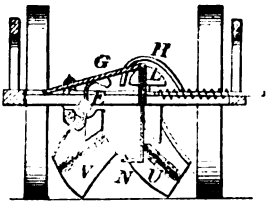

30166

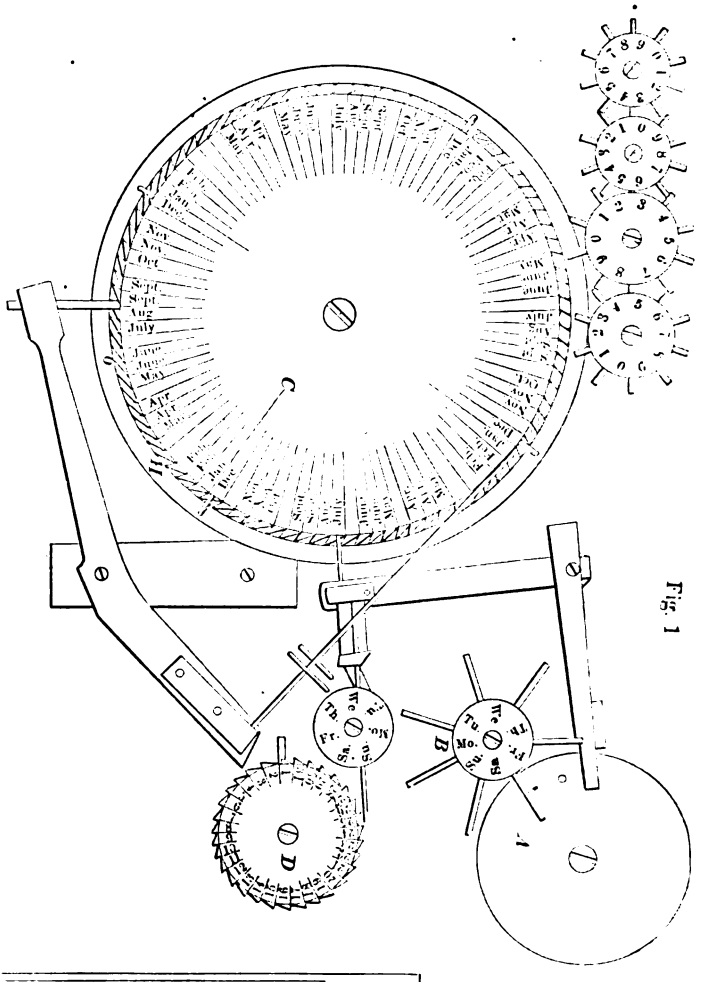

Fig. 1

30167

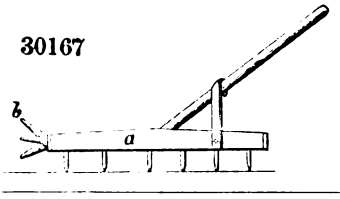

30164

Fig. 1

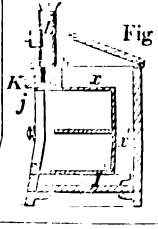

Fig. 2

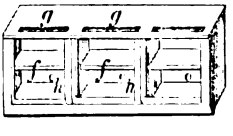

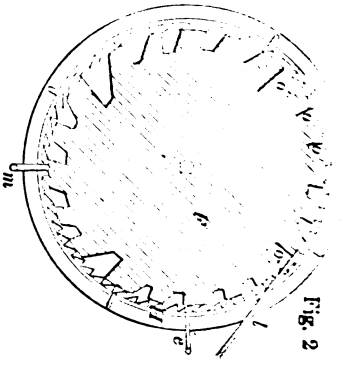

Fig. 2

30168

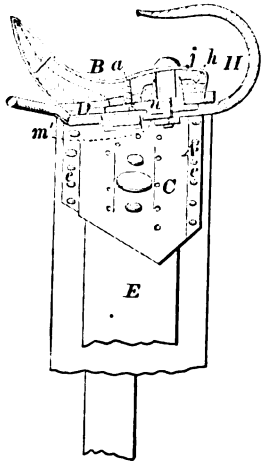

30169

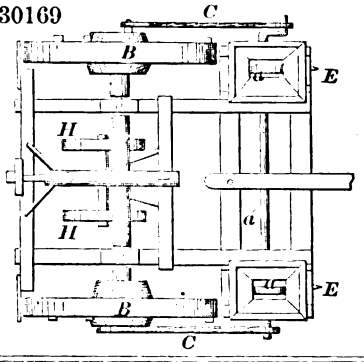

30170

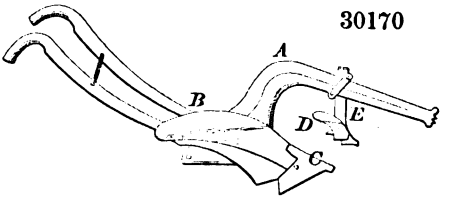

30171

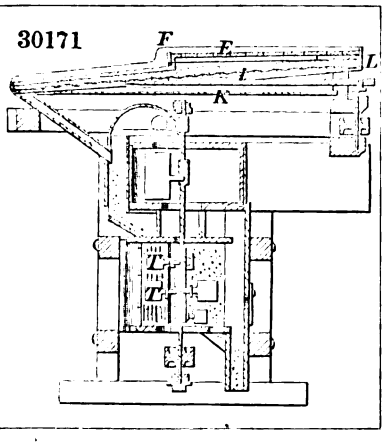

30173

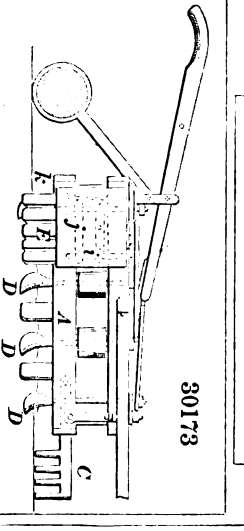

30172

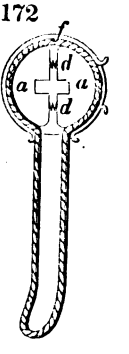

30174

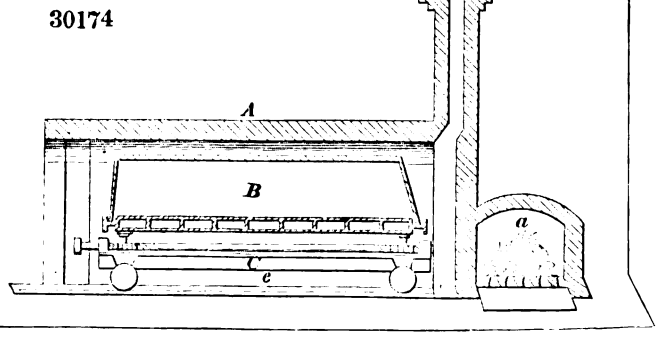

30175

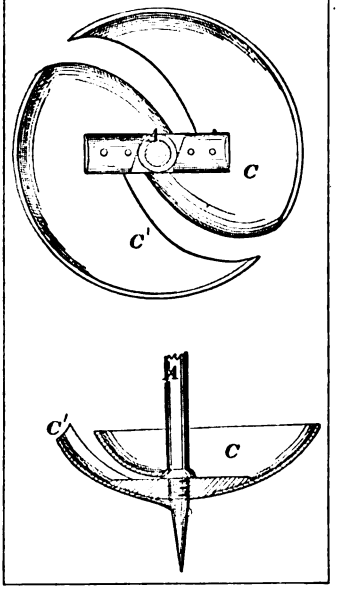

30176

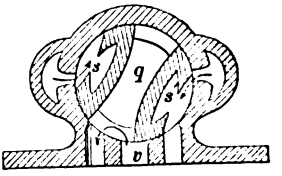

30177

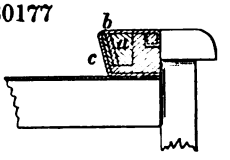

30178

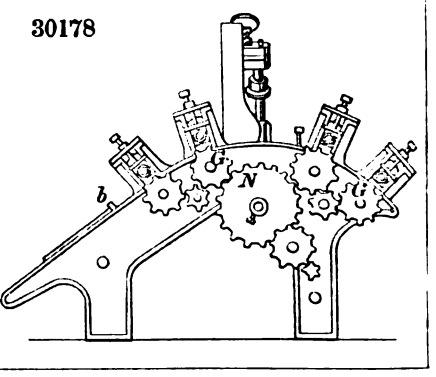

30179

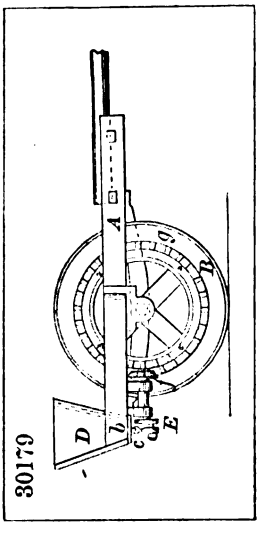

30180

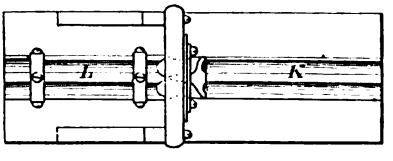

30182

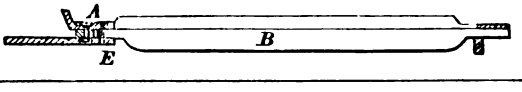

30183

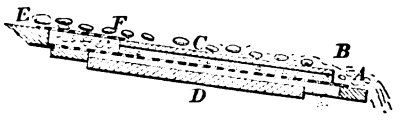

30184

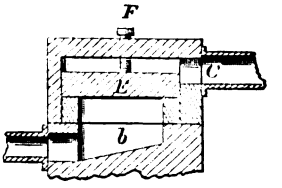

30185

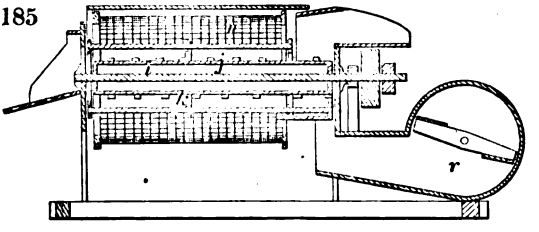

30186

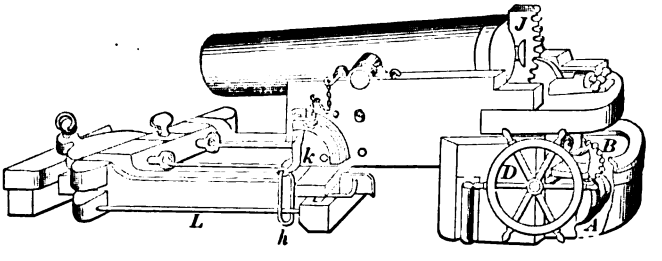

30188

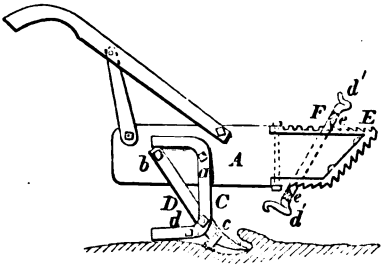

30187

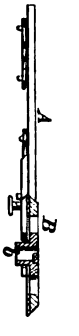

30189

30190

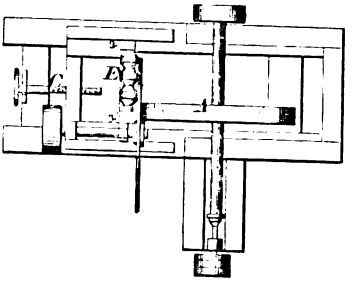

30191

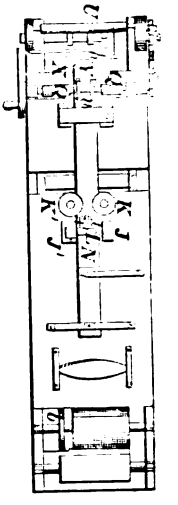

30192

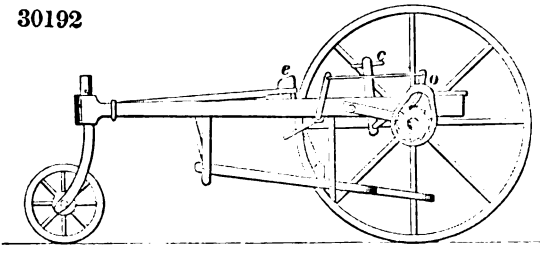

30193

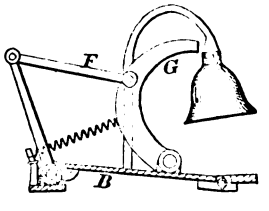

30194

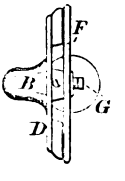

30195

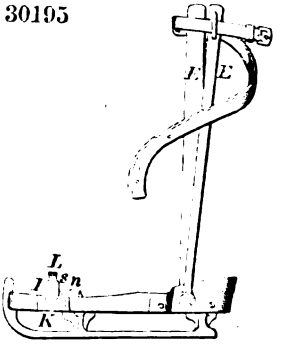

30196

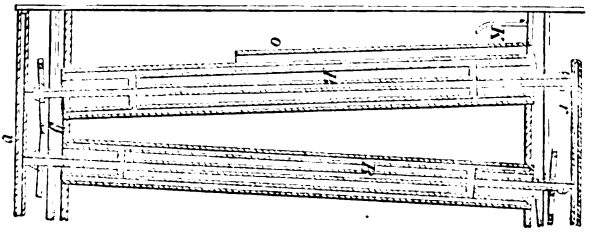

30197

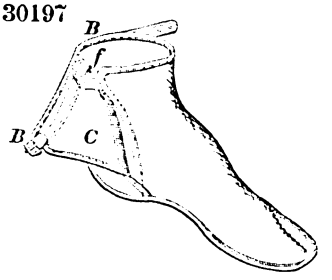

30198

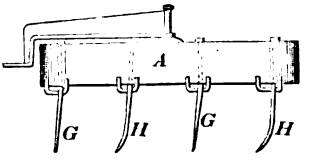

30199

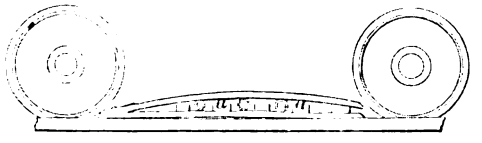

30200

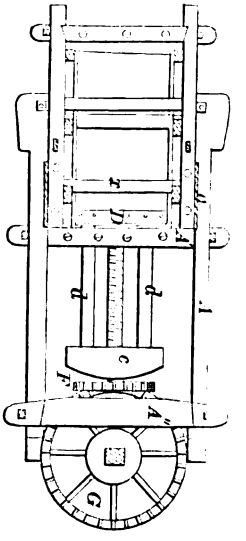

30201

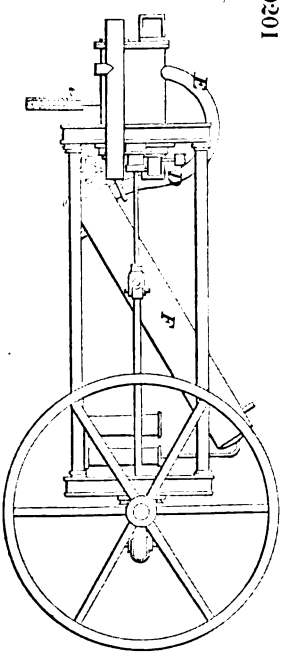

30202

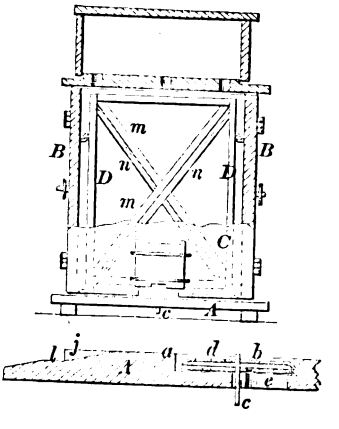

30203

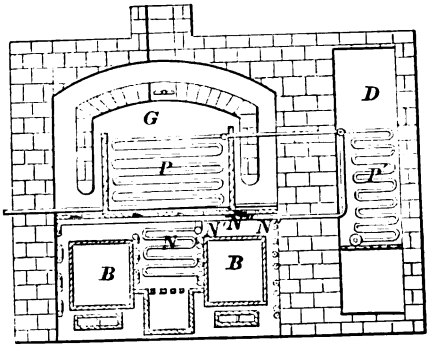

30204

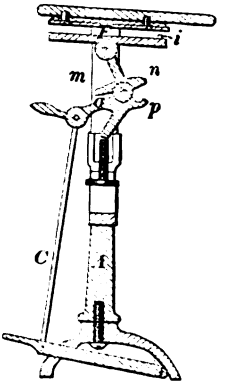

30205

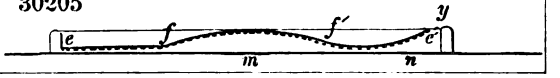

30206

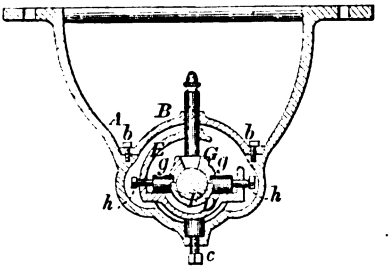

30207

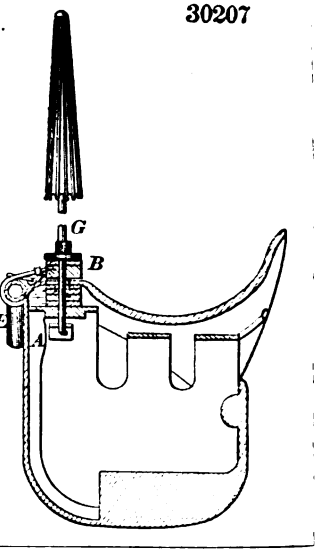

30208

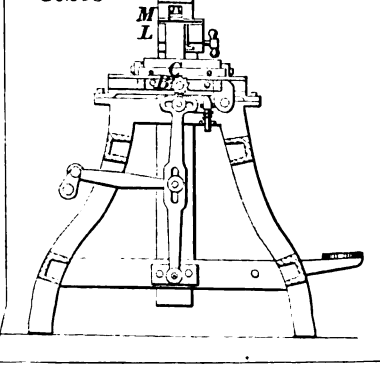

30209

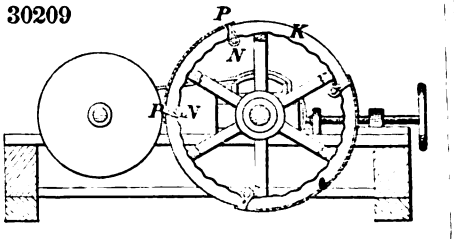

30210

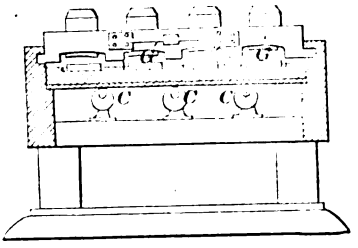

30211

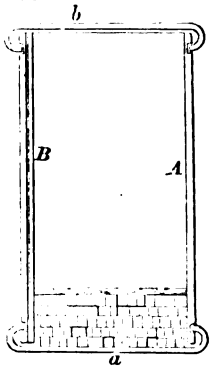

30212

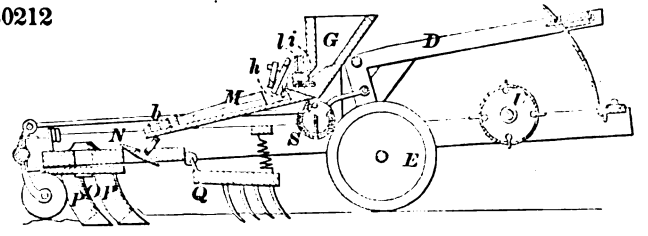

30214

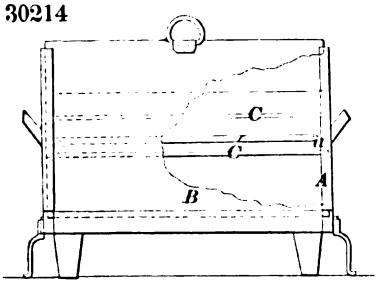

30213

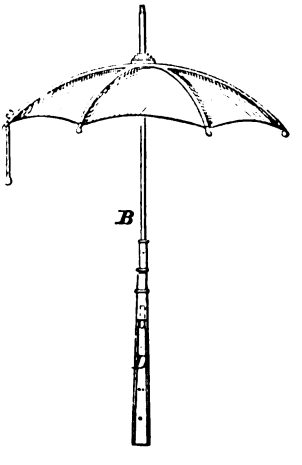

30215

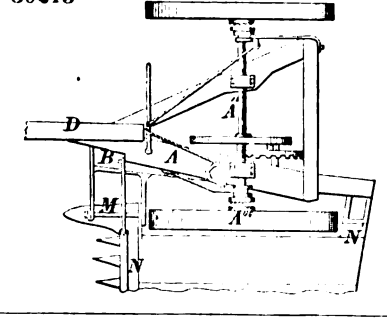

30216

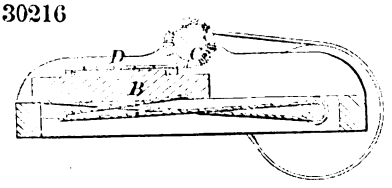

30218

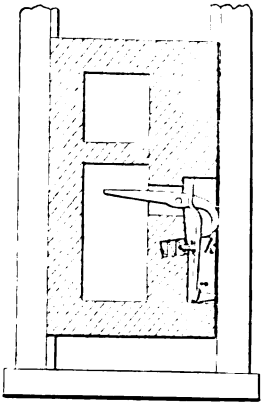

30219

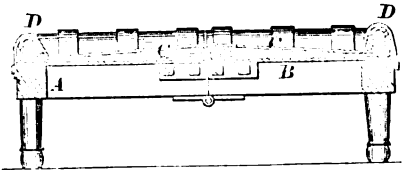

30221

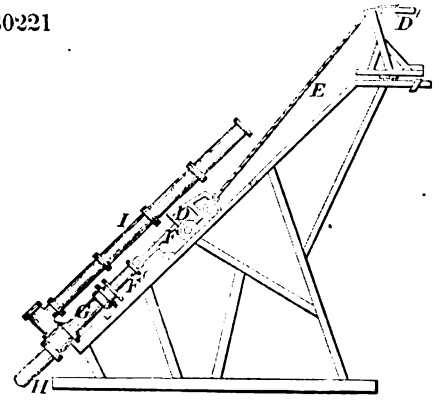

30223

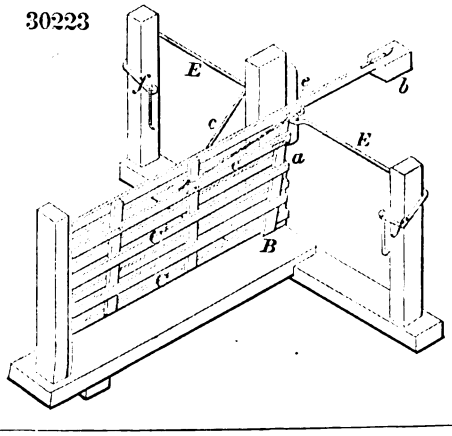

30222

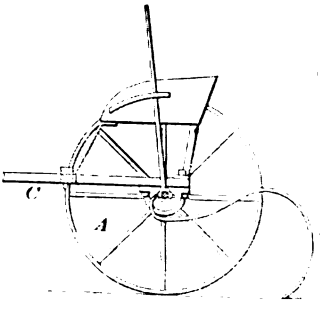

30224

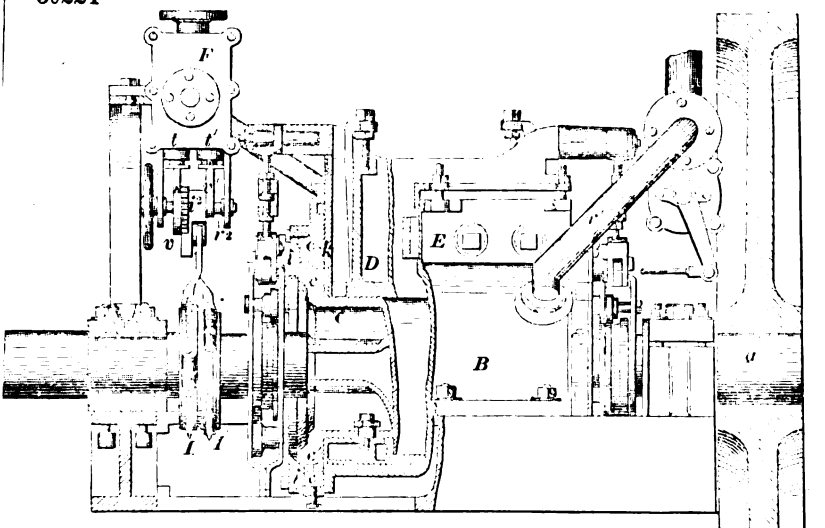

30225

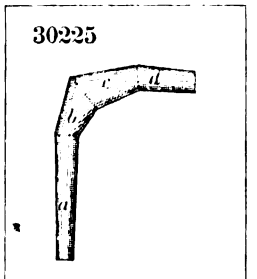

30226

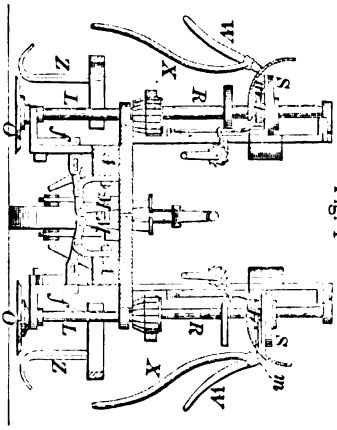

Fig. 1

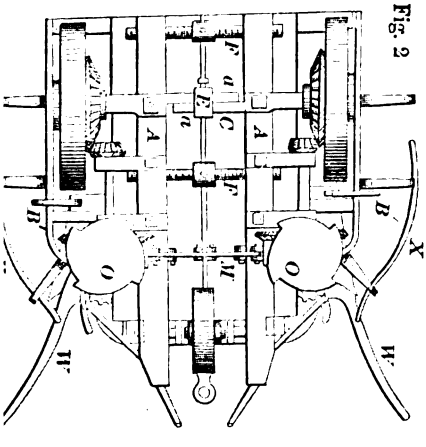

Fig. 2

30227

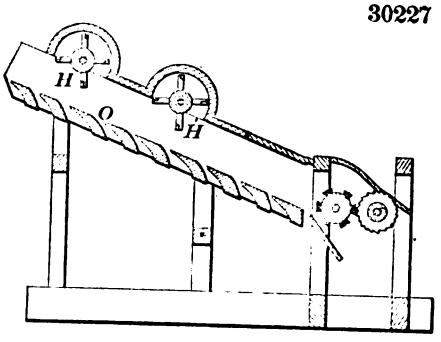

30228

30229

30230

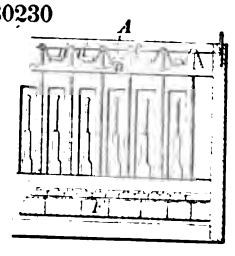

30231

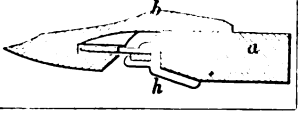

30232

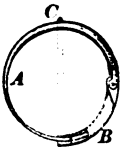

30233

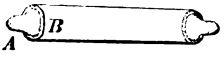

30234

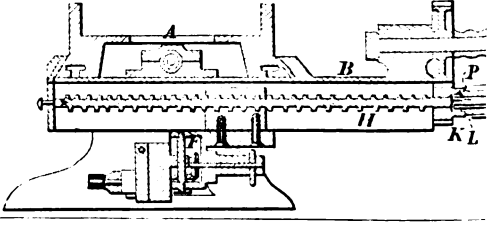

30236

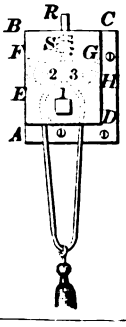

30235

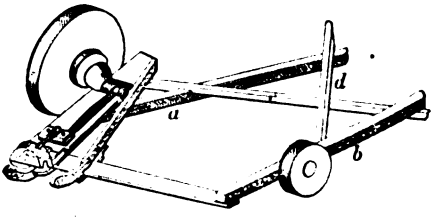

7

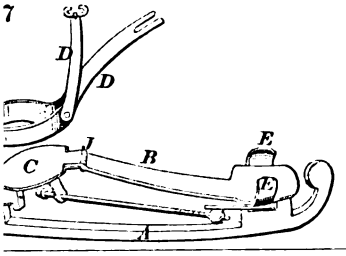

30238

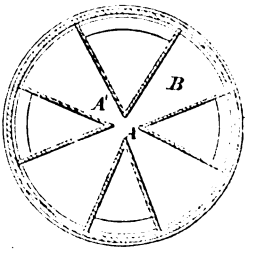

30239

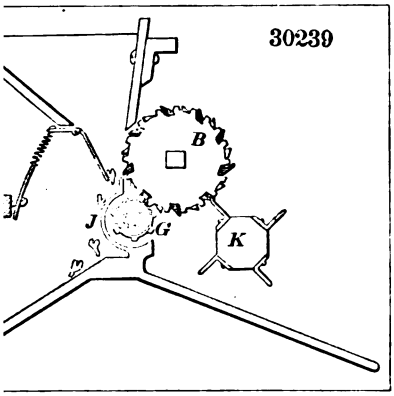

30240

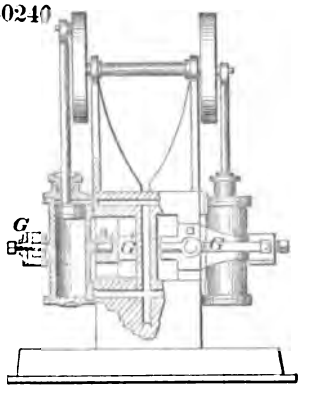

1

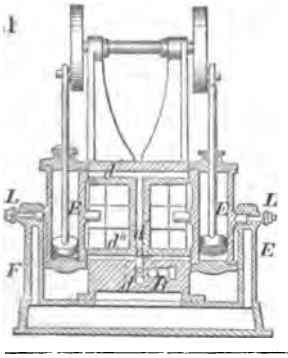

30243

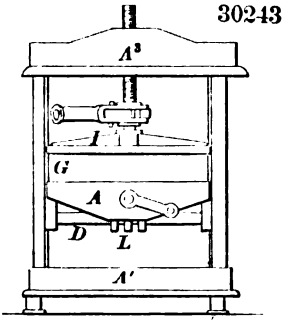

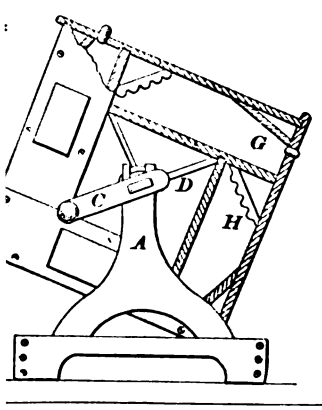

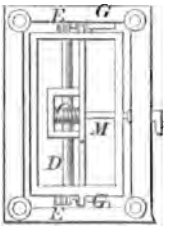

30245

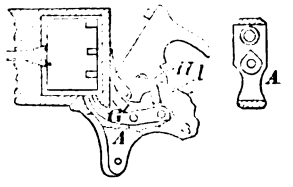

30246

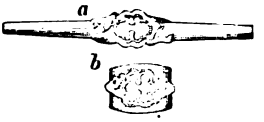

30247

Fig. 1

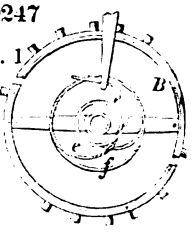

Fig. 2

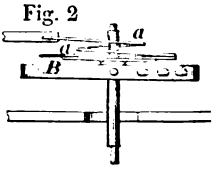

30248

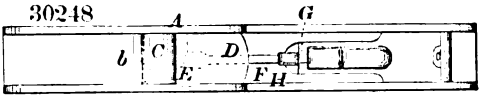

30249

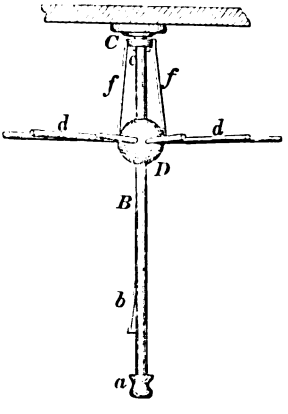

30250

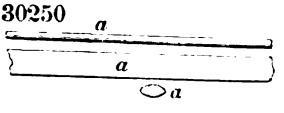

30251

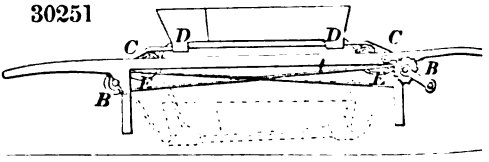

30252

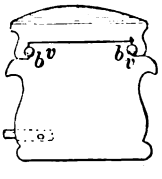

30253

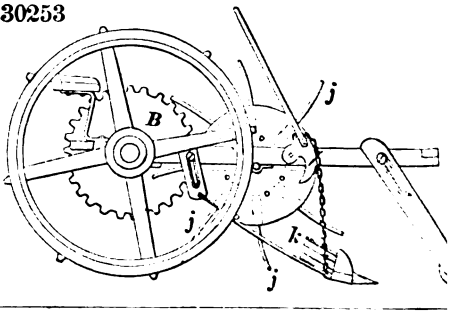

30254

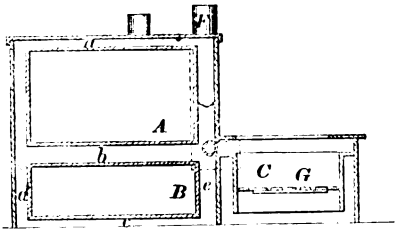

30255

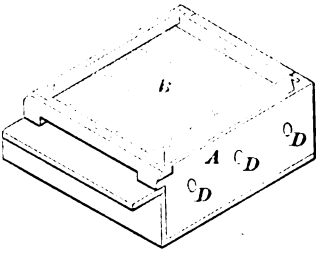

30256

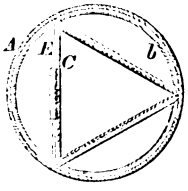

30257

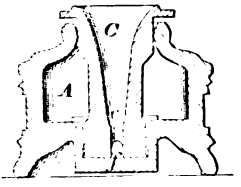

30258

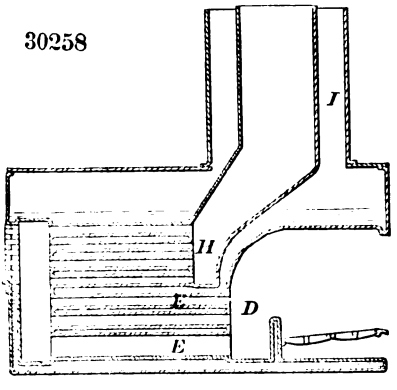

30259

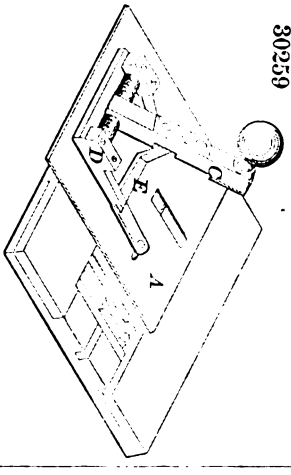

30260

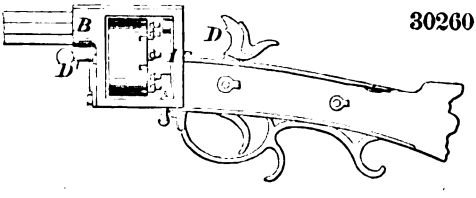

30261

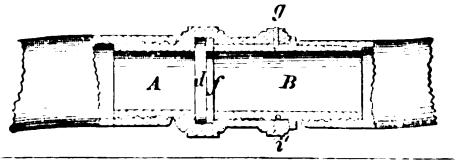

30262

30263

30264

30265

30266

30208

30267

30269

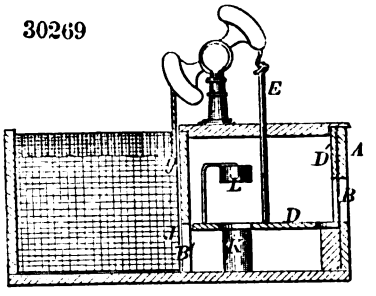

30270

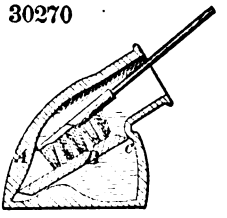

30271

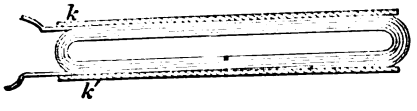

30272

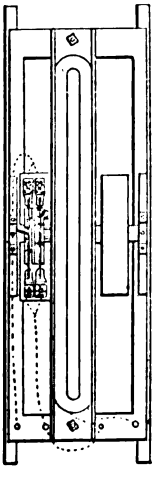

30273

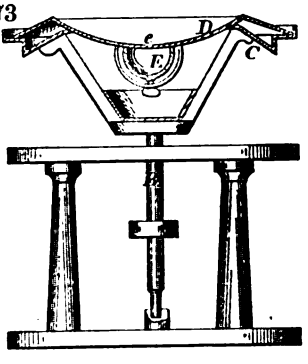

30274

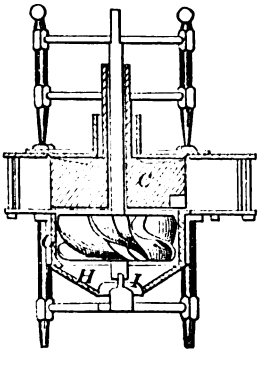

30275

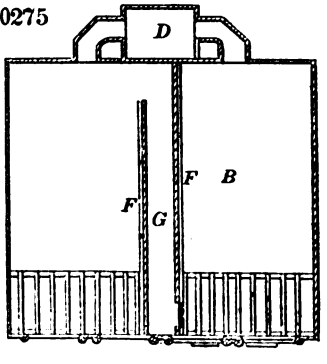

30276

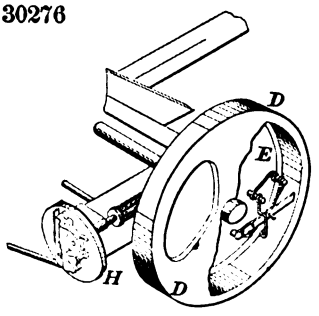

30277

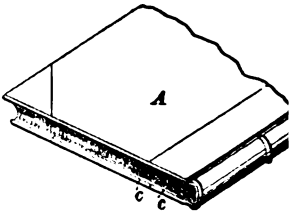

30278

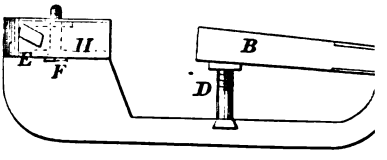

30279

30282

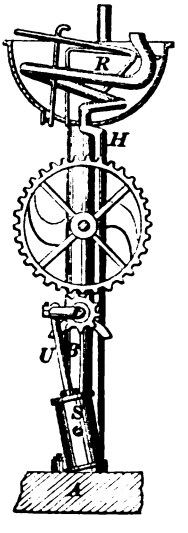

30280

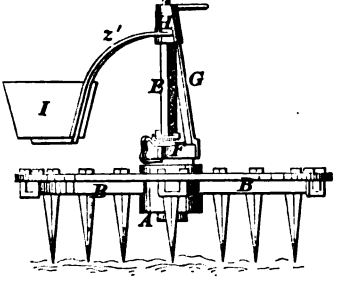

30281

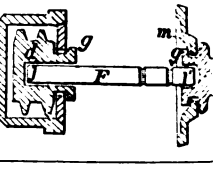

30288

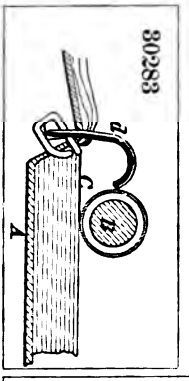

30284

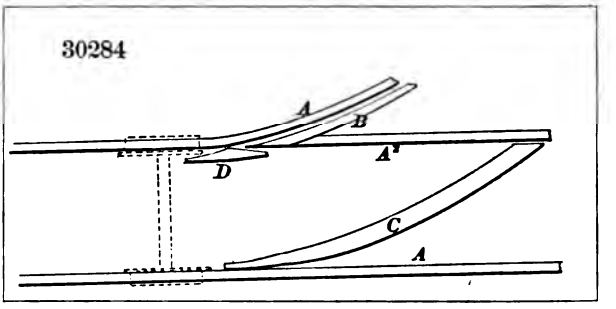

30285

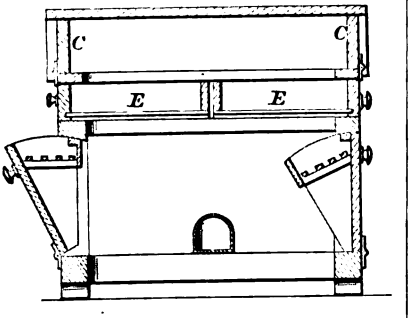

30286

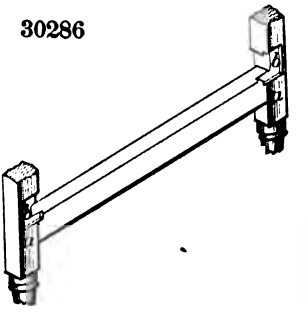

30287

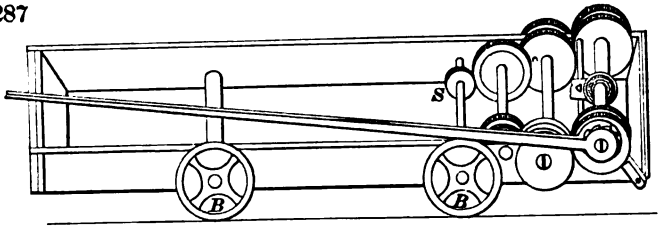

30288

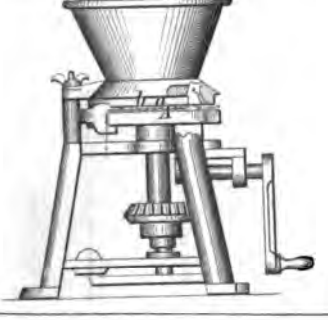

30289

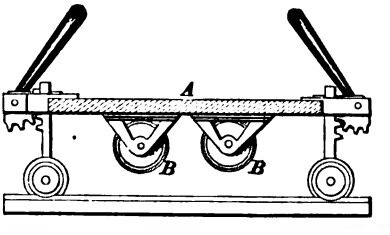

30290

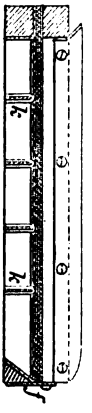

30291

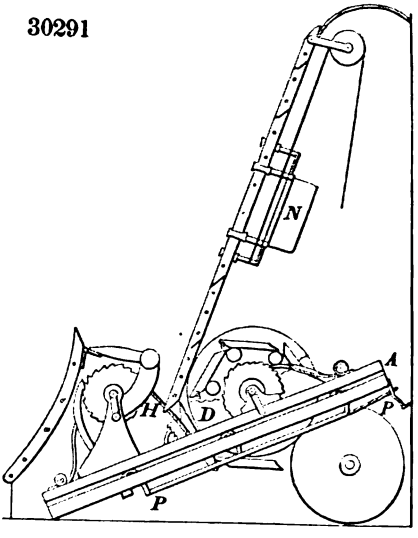

30292

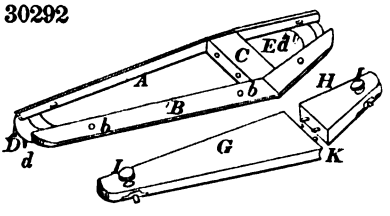

30293

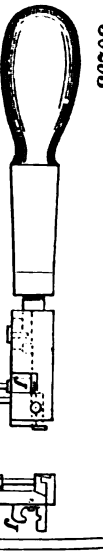

30294

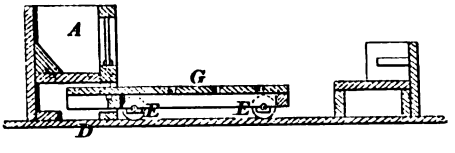

30295

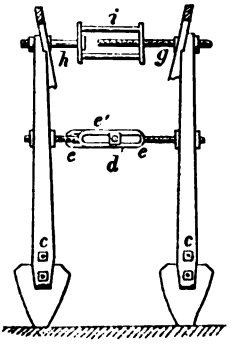

30296

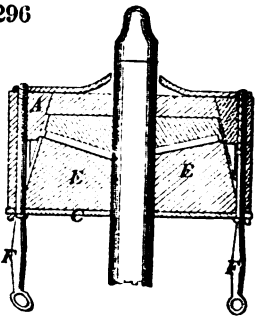

30297

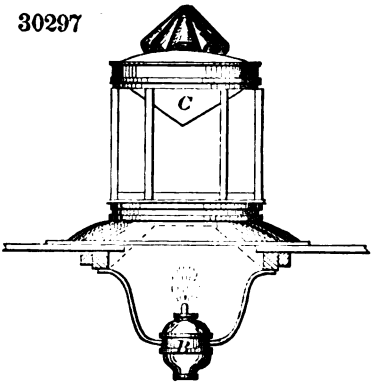

30298

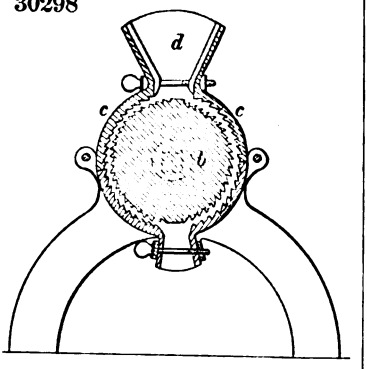

30299

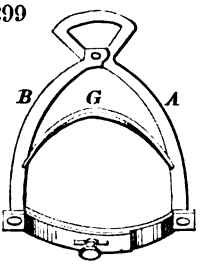

30300

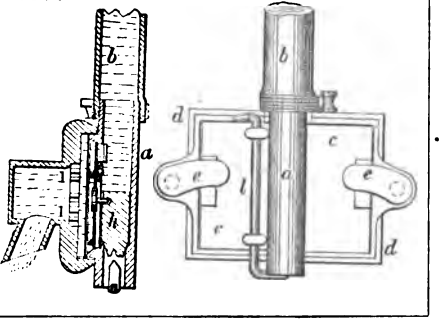

30301

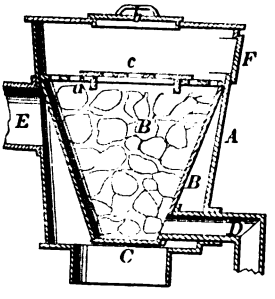

30302

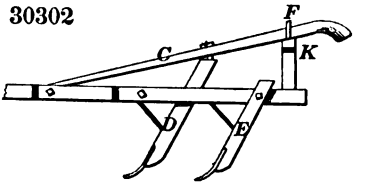

30303

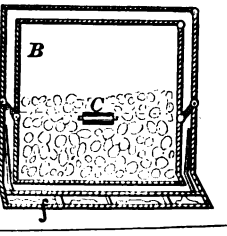

30304

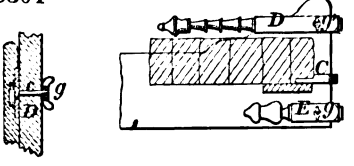

30290

30291

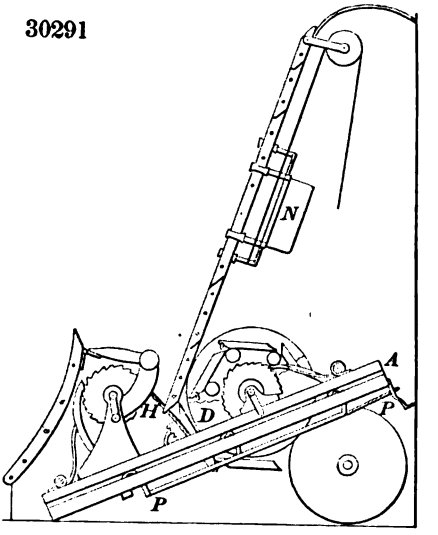

30292

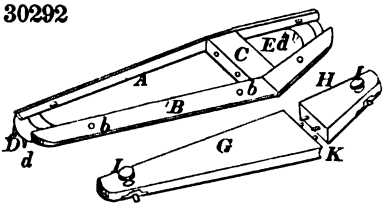

30293

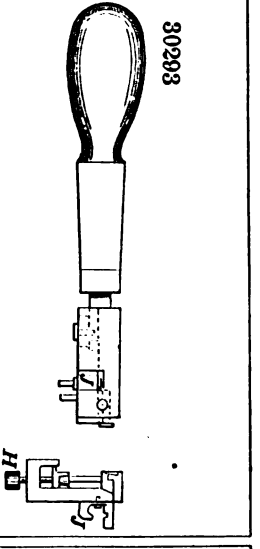

30294

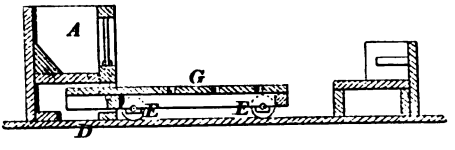

30295

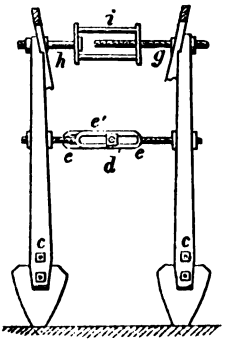

30296

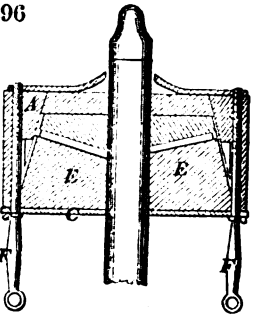

30297

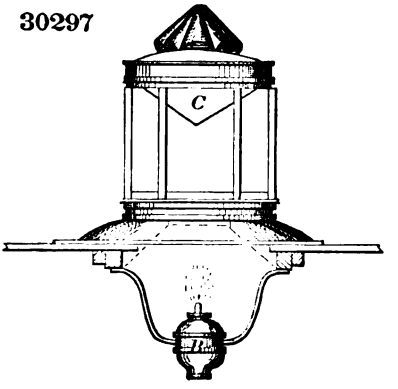

30298

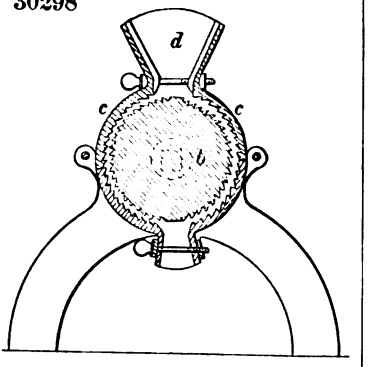

30299

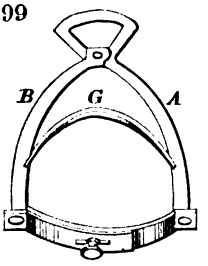

30300

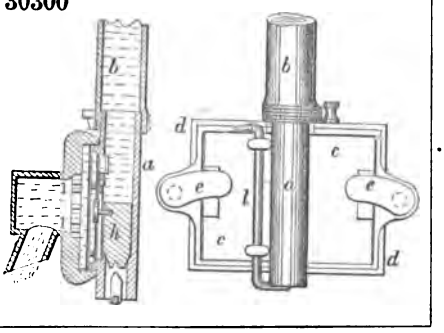

30301

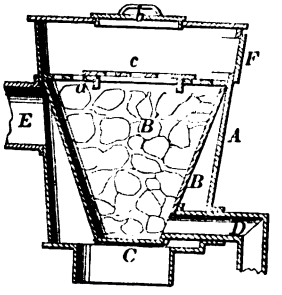

30302

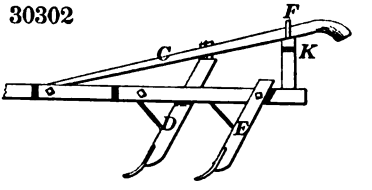

30303

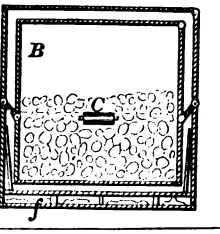

30304

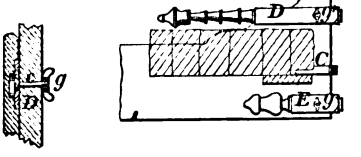

30305

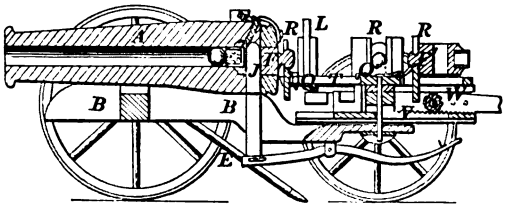

30306

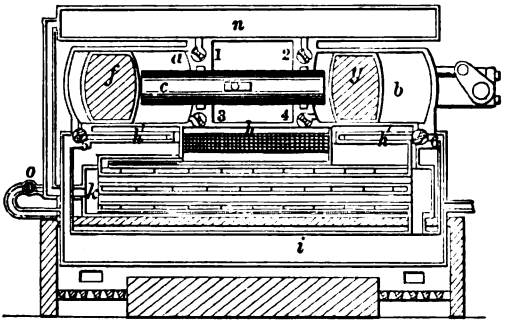

30307

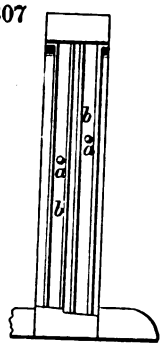

30308

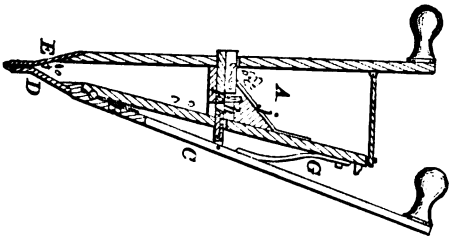

30309

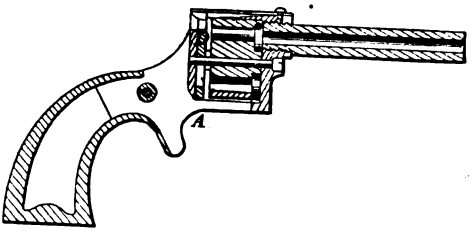

30310

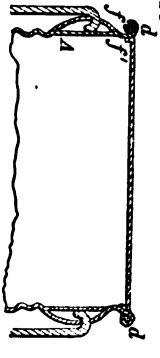

30311

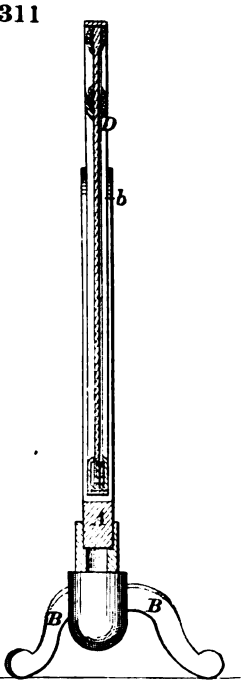

30312

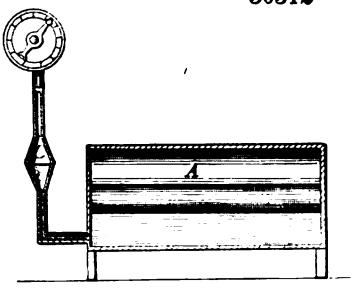

30313

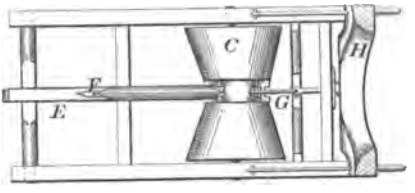

30314

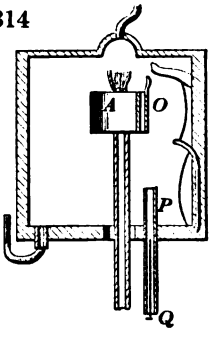

30315

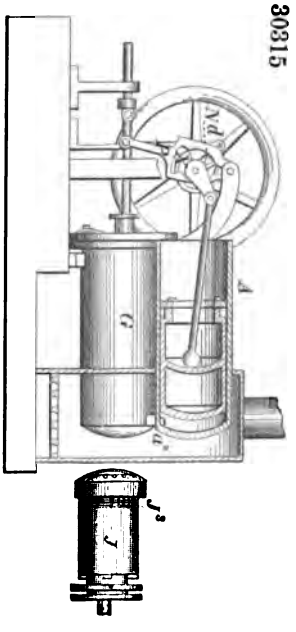

30316

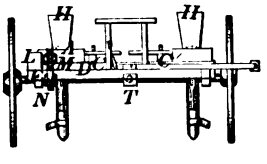

30317

30319

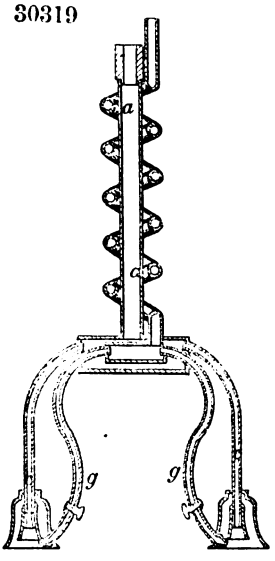

30322

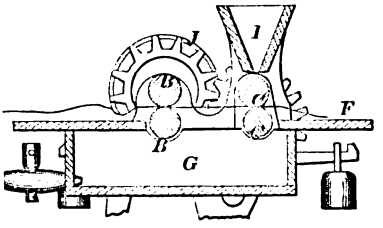

30321

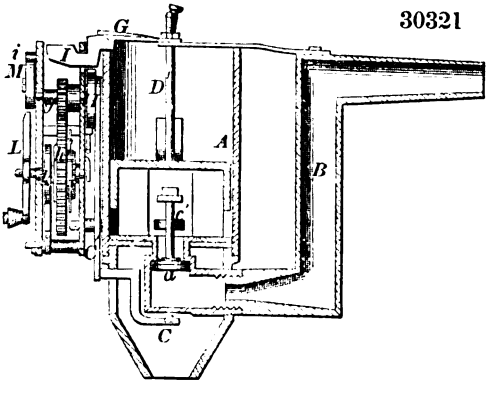

30318

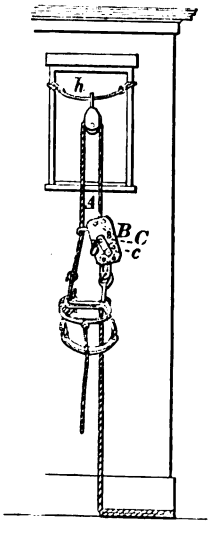

30323

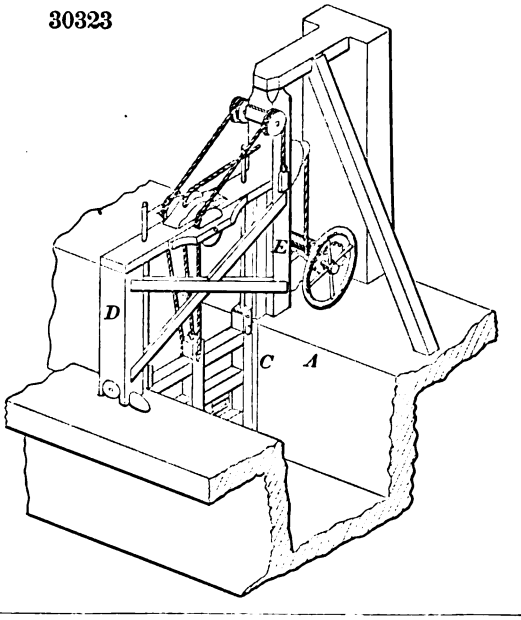

30324

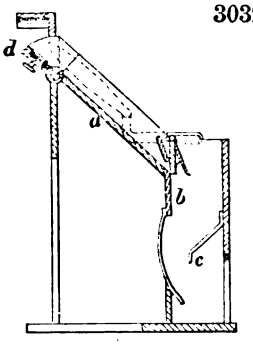

30325

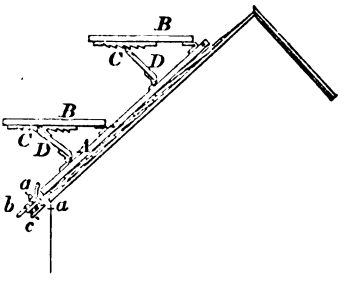

30326

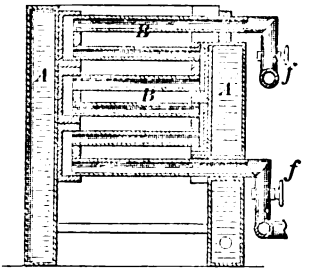

30327

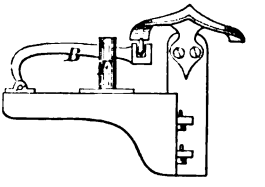

30328

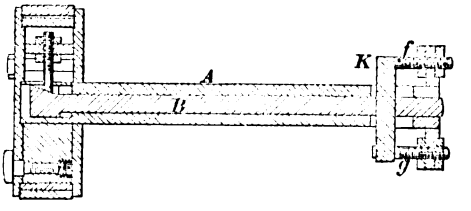

30329

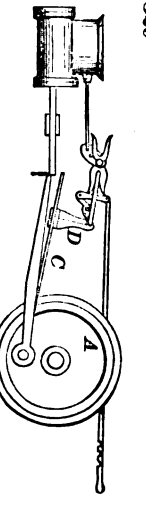

30330

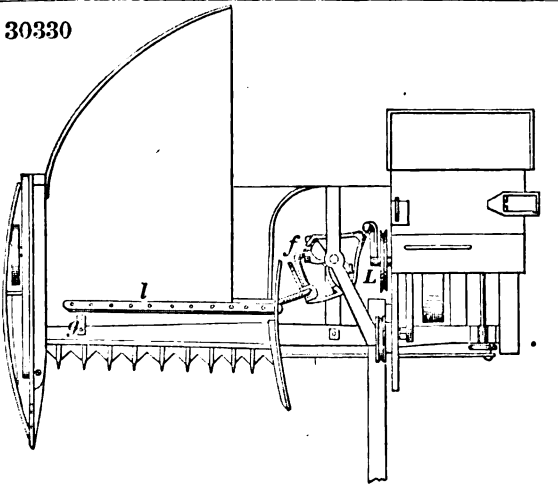

30331

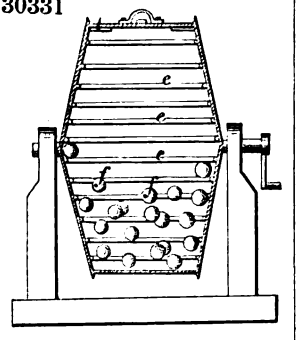

30332

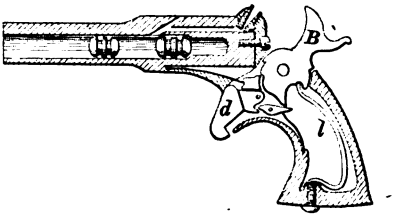

30333

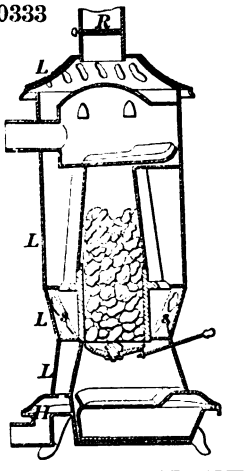

30334

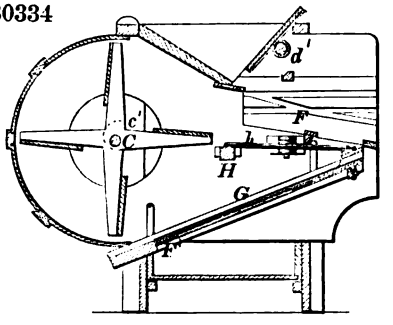

30335

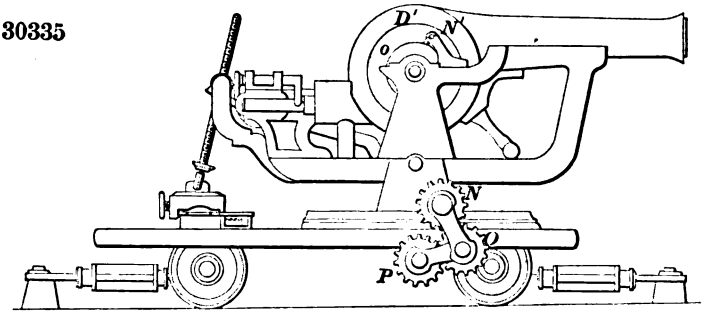

30336

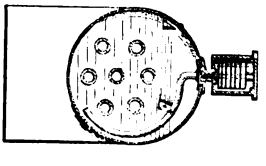

30337

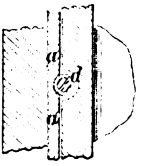

30338

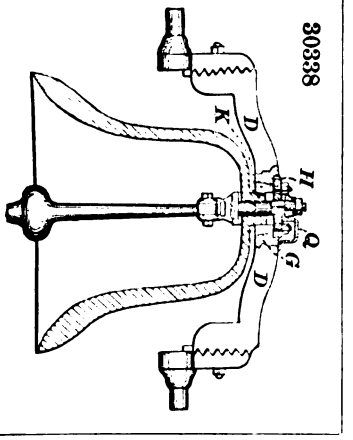

30339

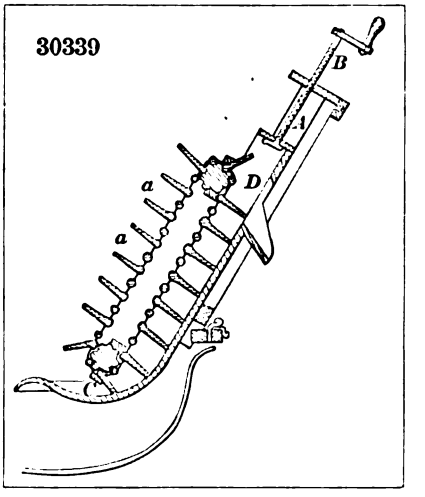

30340

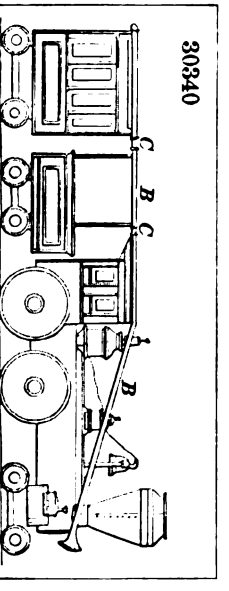

30341

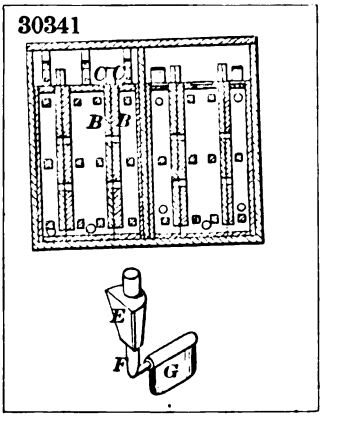

30342

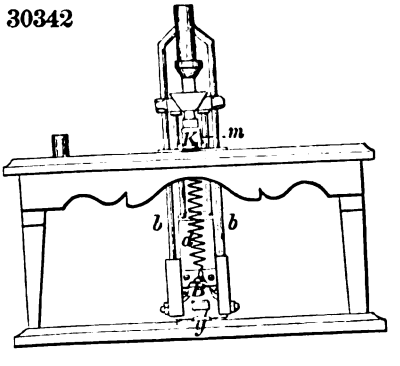

30343

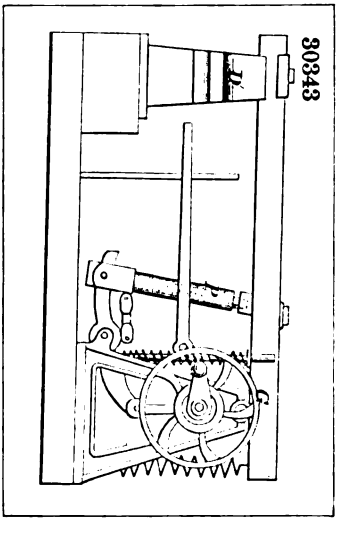

30344

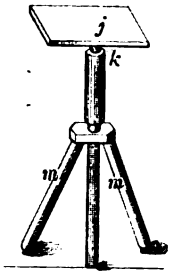

30345

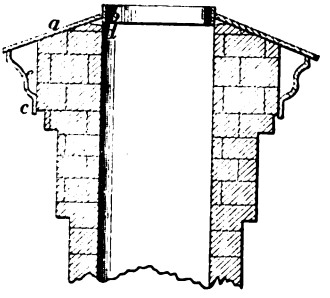

30346

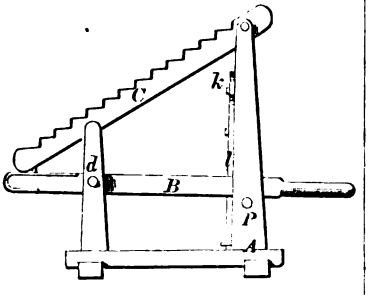

30347

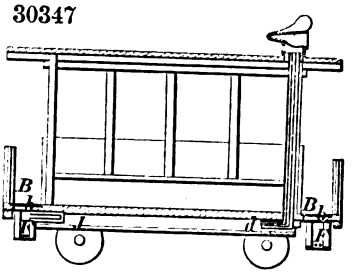

30348

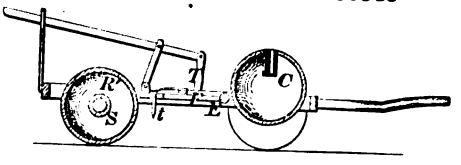

30349

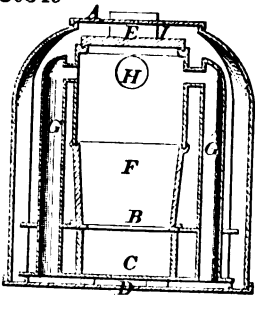

30350

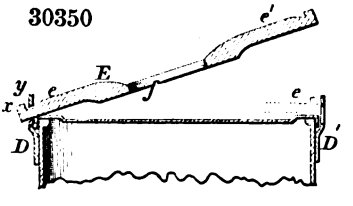

30351

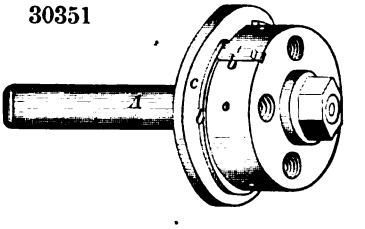

30352

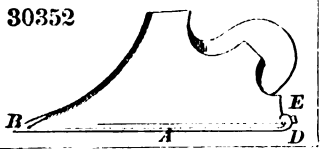

30353

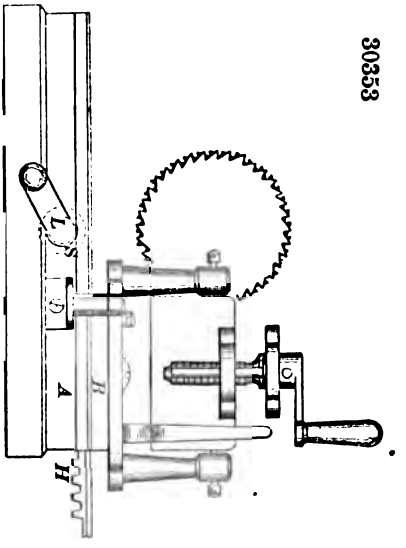

30354

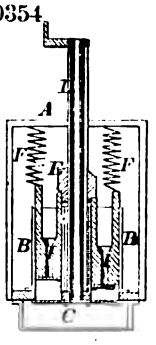

30355

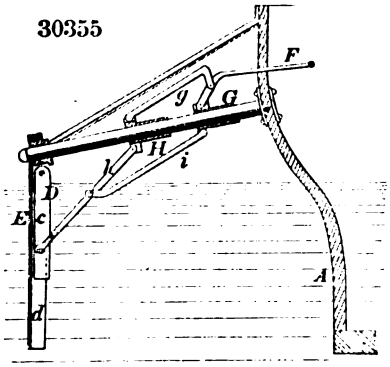

30356

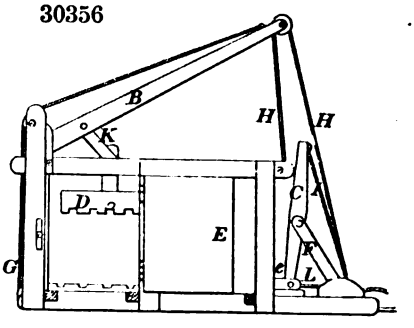

30358

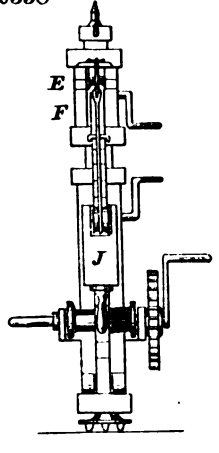

30357

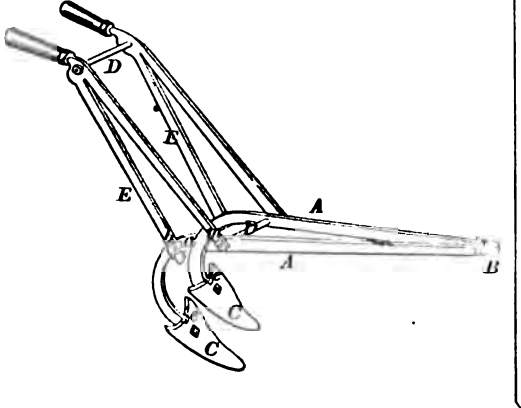

30359

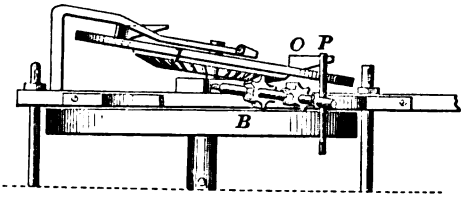

30360

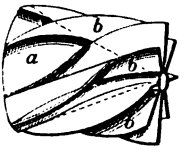

30361

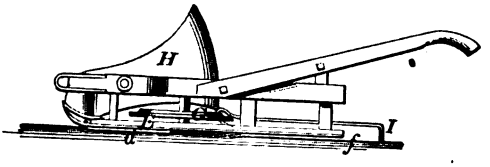

30362

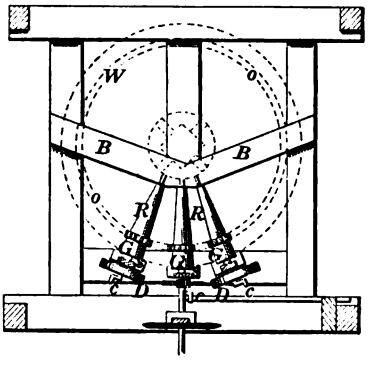

30363

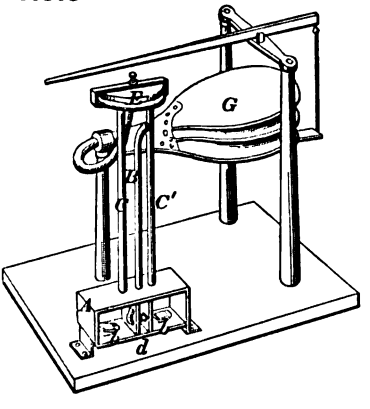

30364

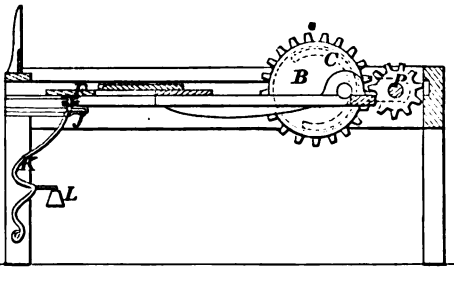

30365

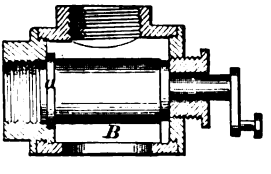

30366

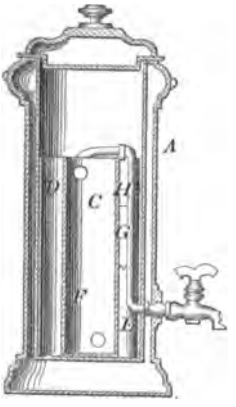

30368

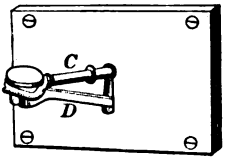

30369

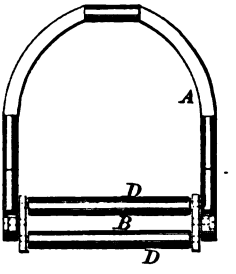

30370

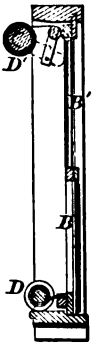

30371

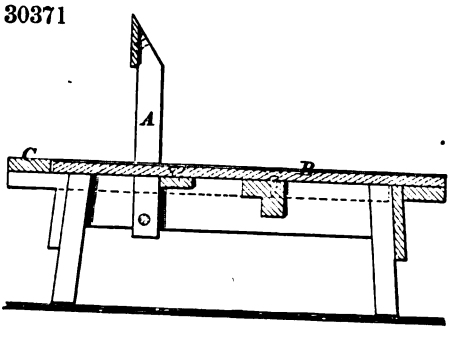

30372

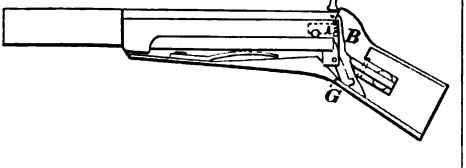

30373

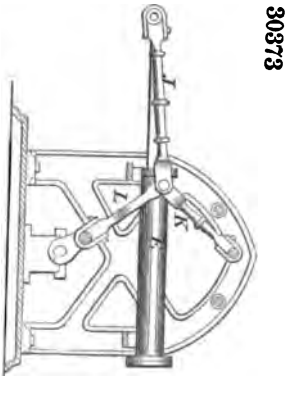

30374

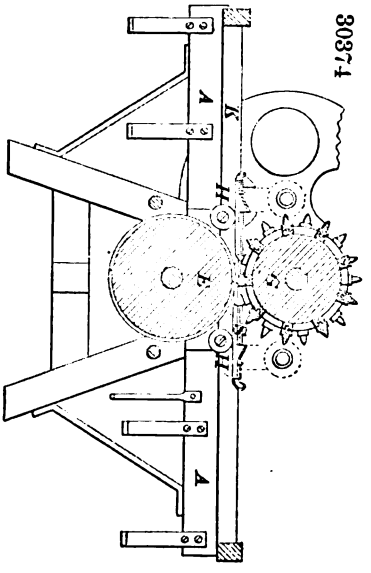

30375

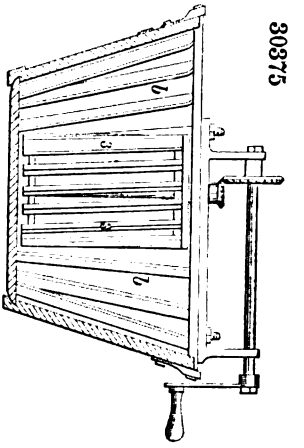

30377

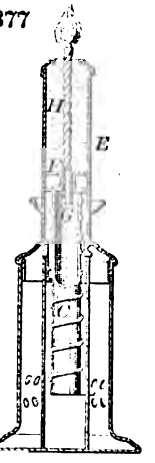

30378

Fig. 1

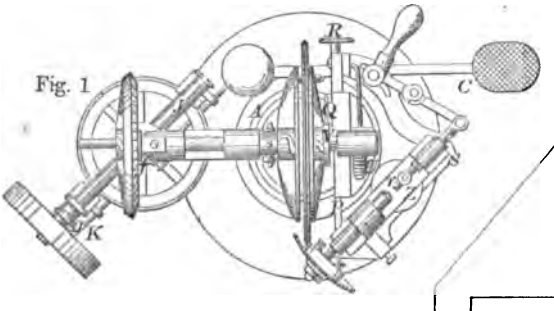

Fig. 2

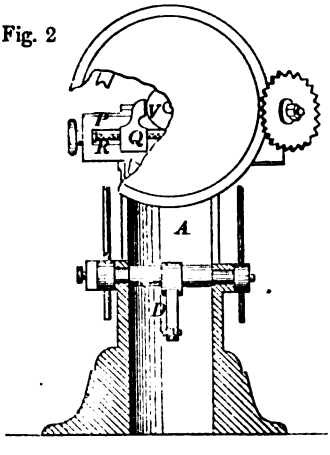

30376

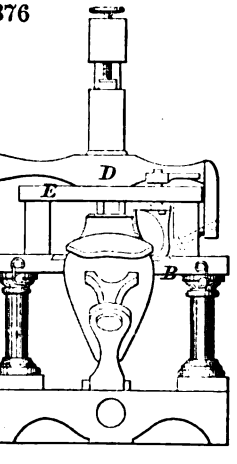

30379

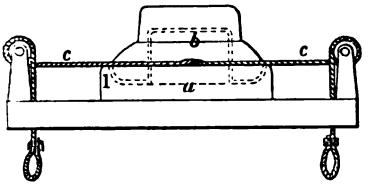

30381

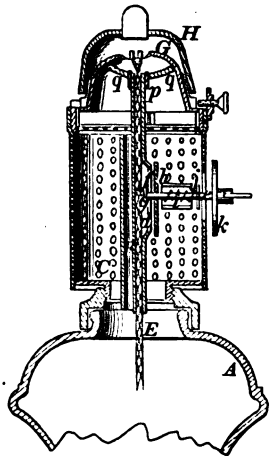

30382

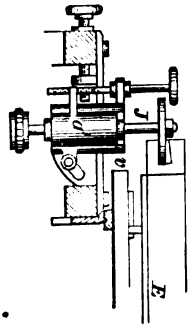

30380

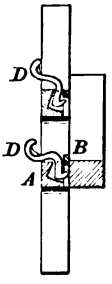

30383

Fig. 1

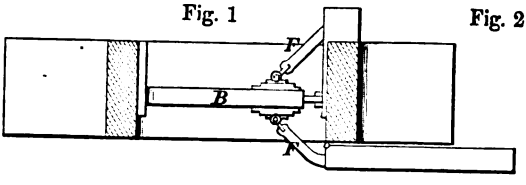

Fig. 2

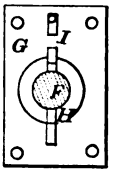

30384

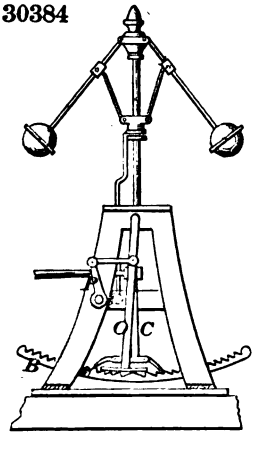

30385

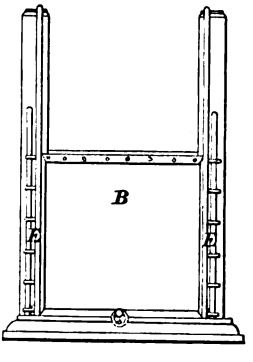

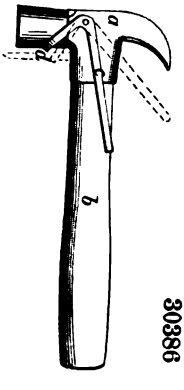

30386

30387

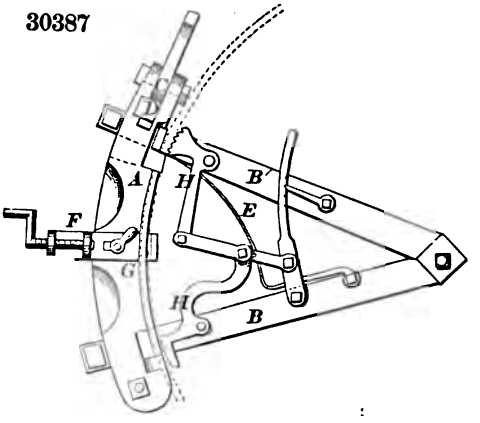

30388

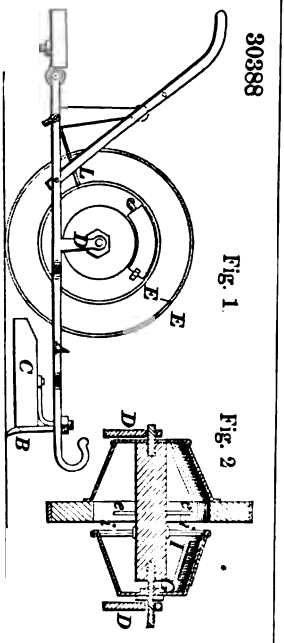

Fig. 1

Fig. 2

30389

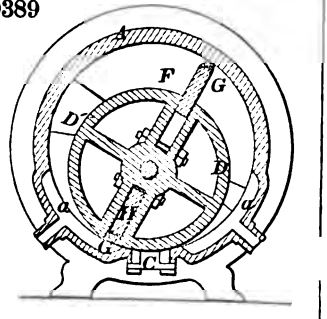

30391

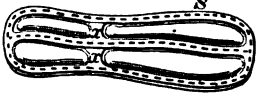

30394

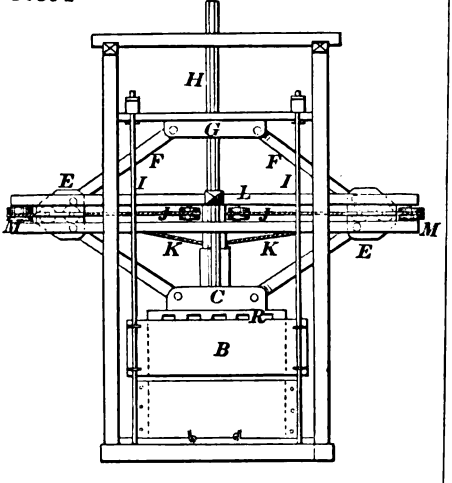

30395

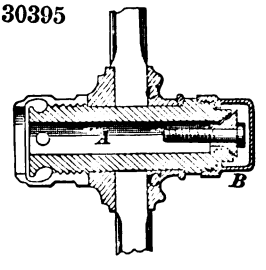

30397

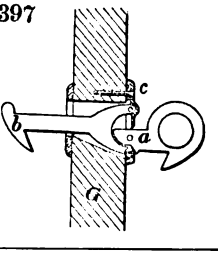

30399

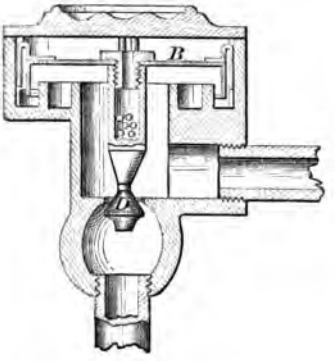

30400

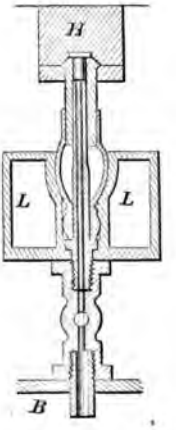

30401

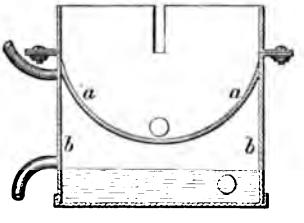

30402

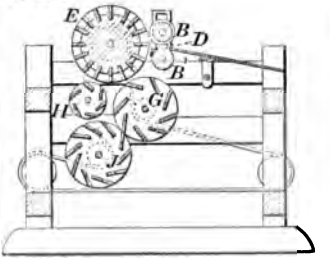

30403

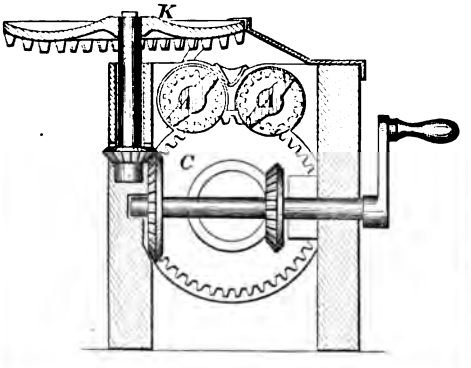

30404

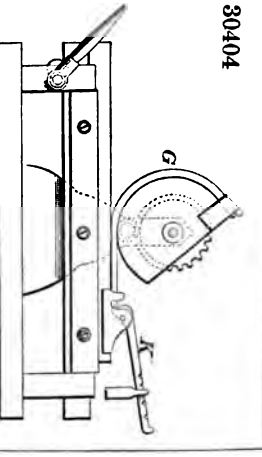

30405

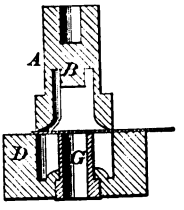

30406

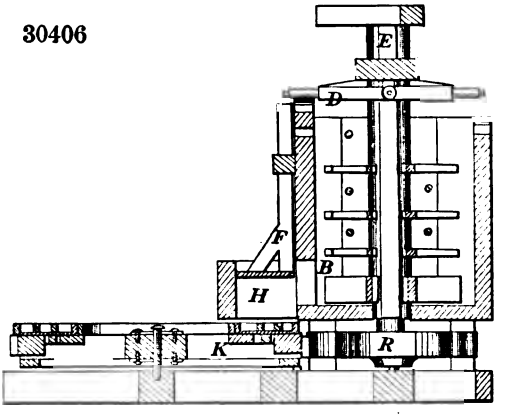

30407

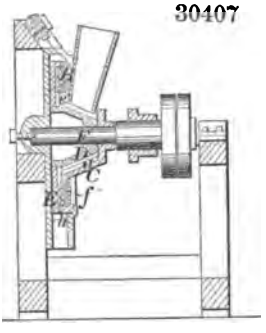

30408

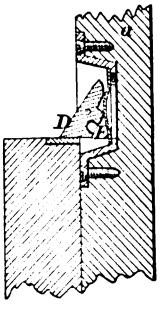

30409

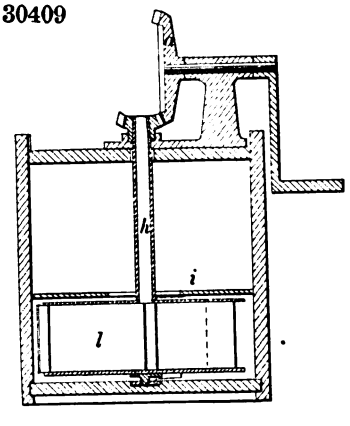

30410

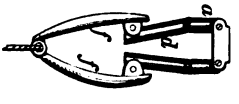

30411

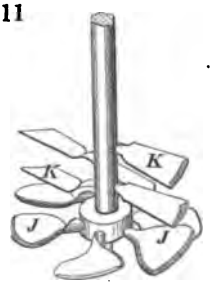

30412

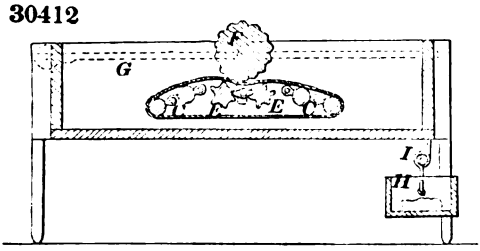

30413

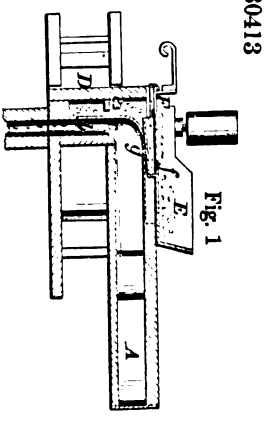

Fig. 1

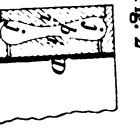

Fig. 2

30414

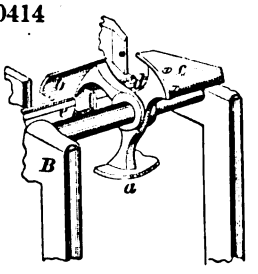

30415

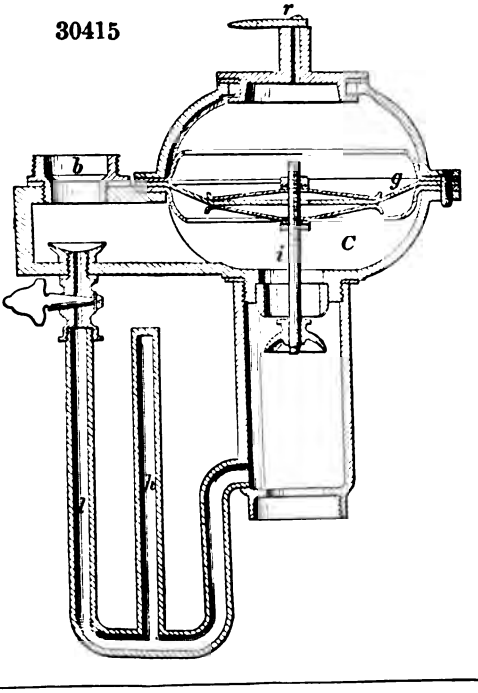

30416

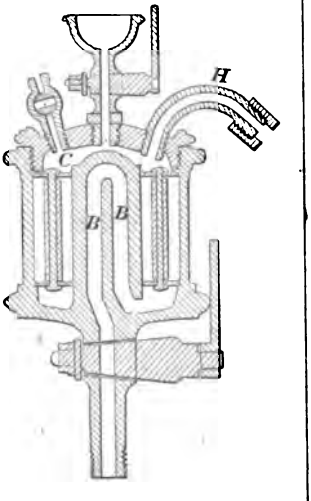

30417

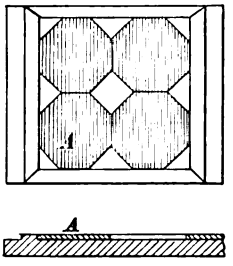

30418

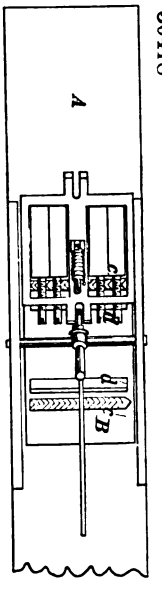

30419

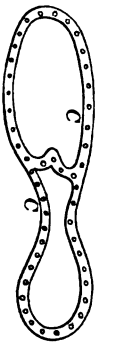

30421

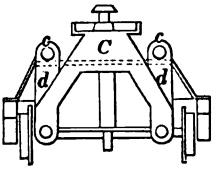

30420

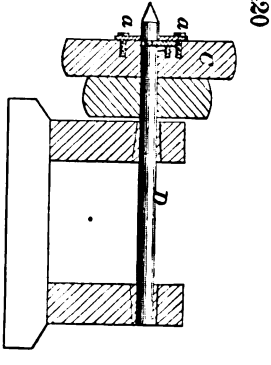

30422

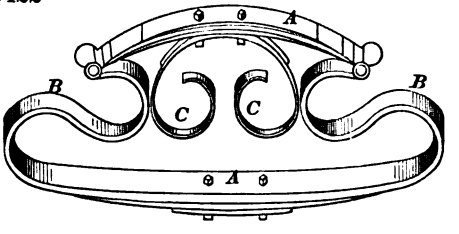

30423

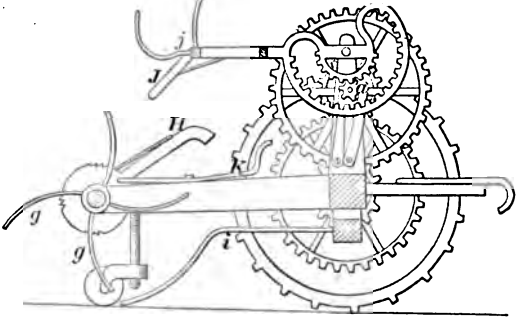

30424

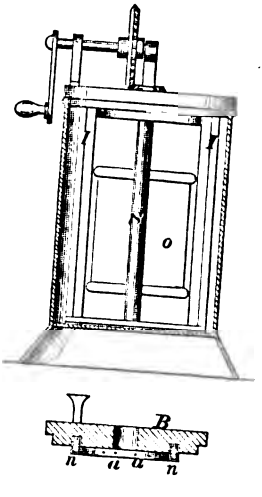

30425

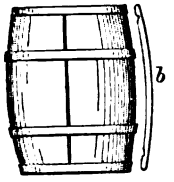

30426

30427

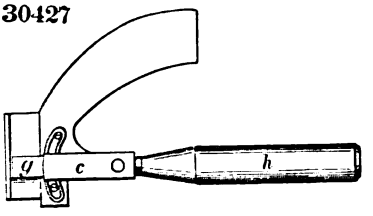

30428

Fig. 1

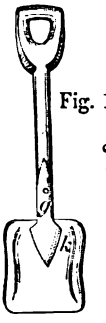

Fig. 2

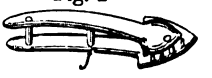

30429

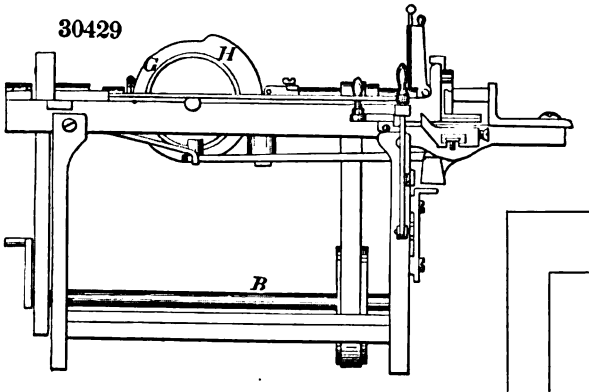

30430

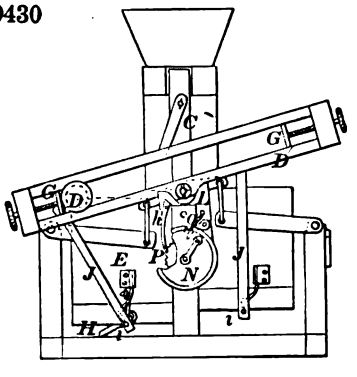

30431

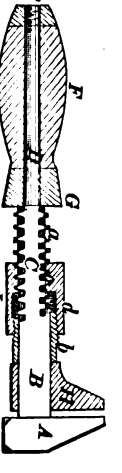

30432

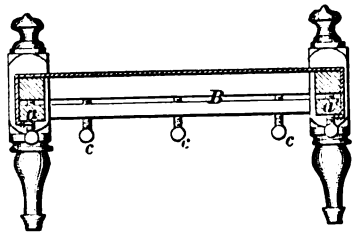

30433

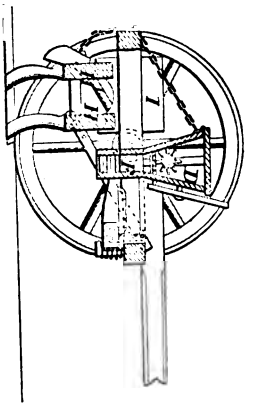

30435

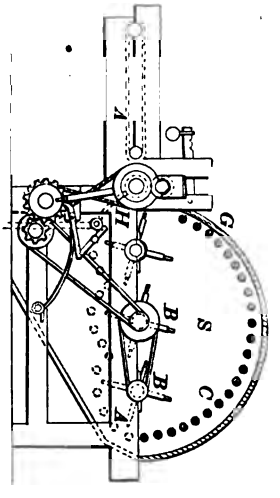

30436

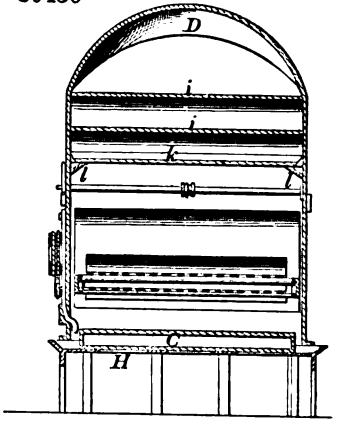

30437

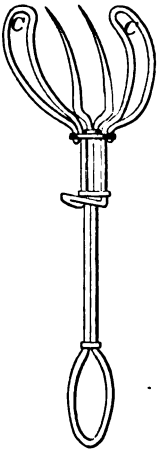

30438

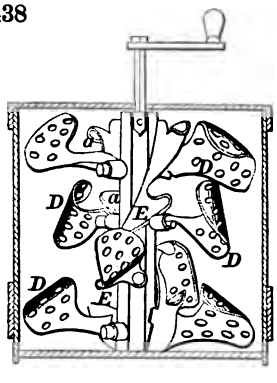

30440

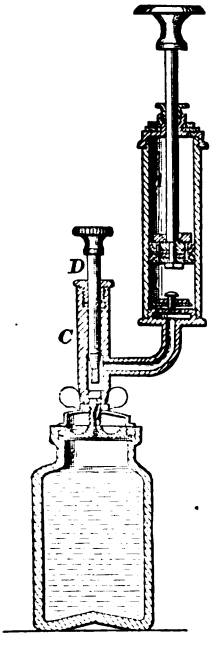

30441

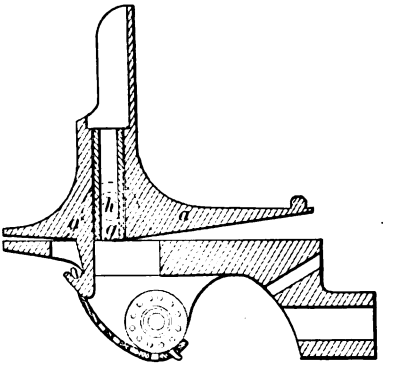

30442

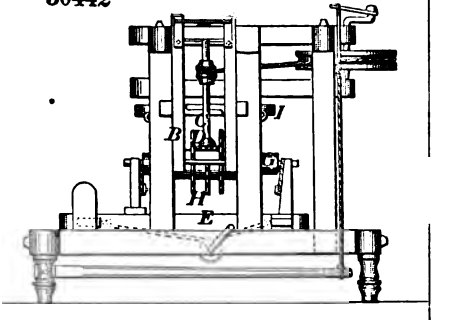

30444

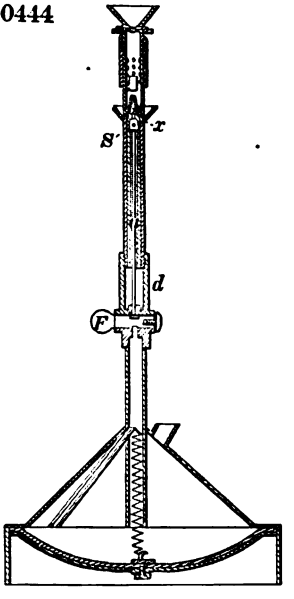

30443

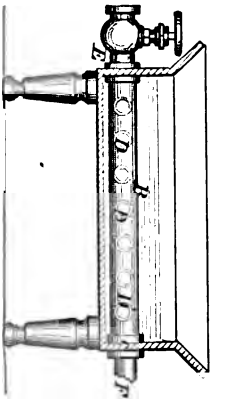

30445

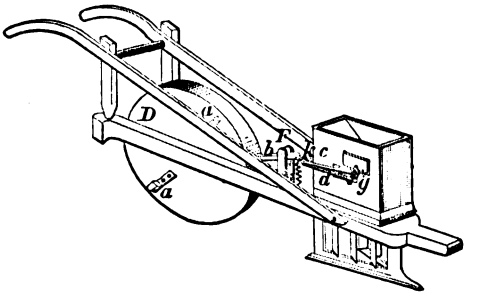

30446

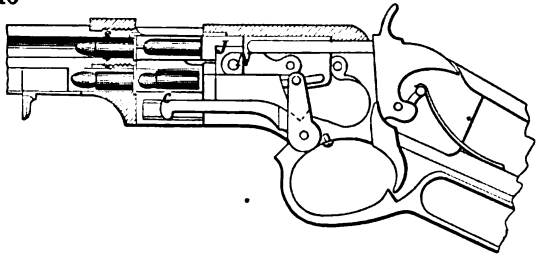

30447

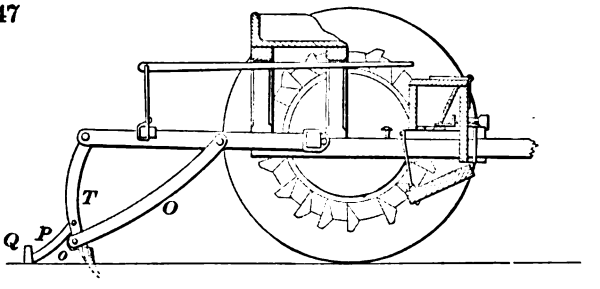

30448

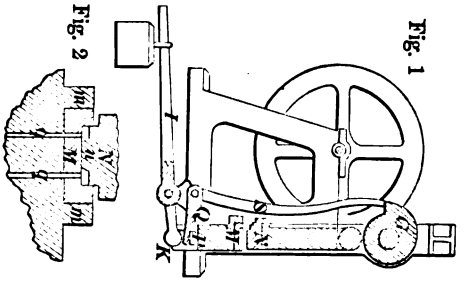

30449

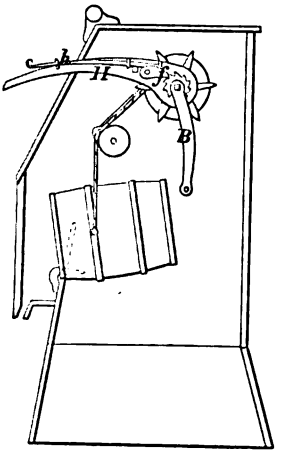

30450

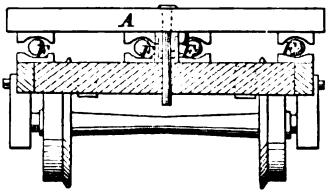

30451

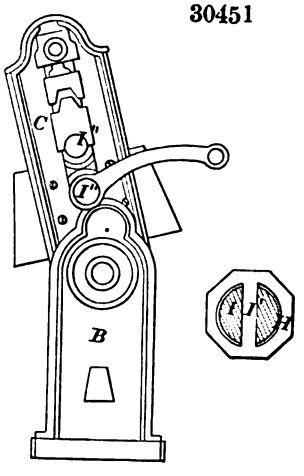

30452

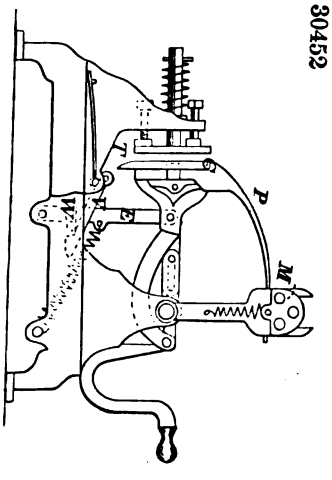

30454

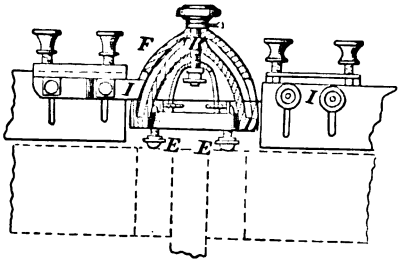

30453

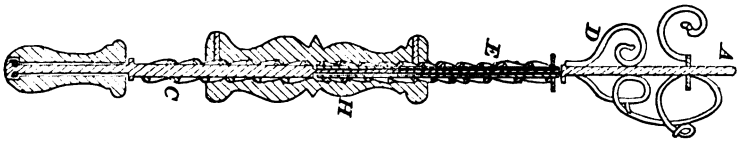

30454

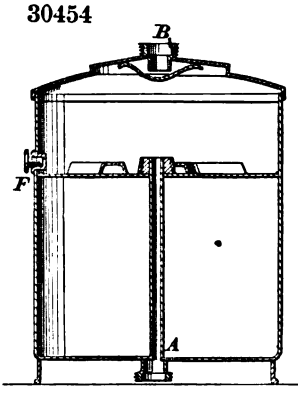

30455

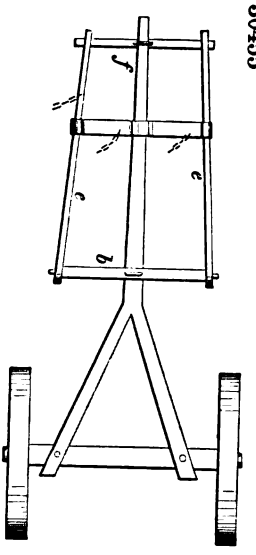

30456

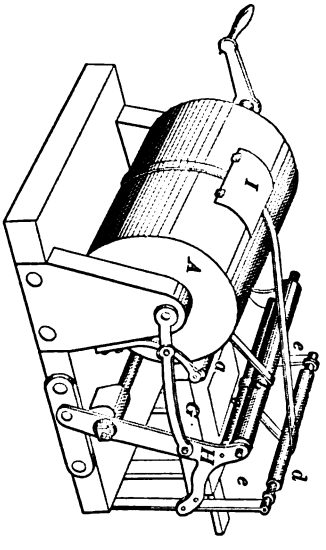

30458

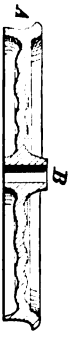

30457

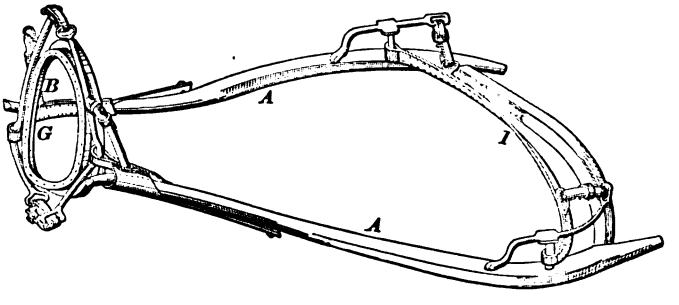

30459

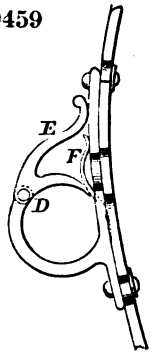

30460

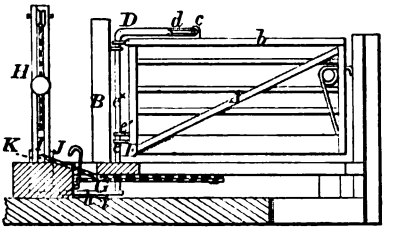

30461

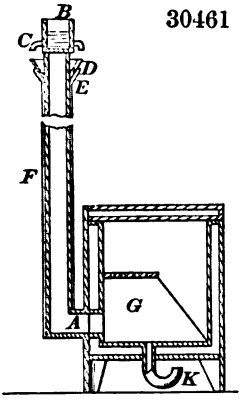

30462

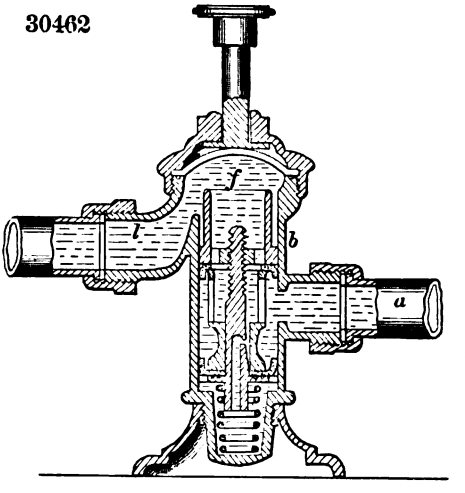

30463

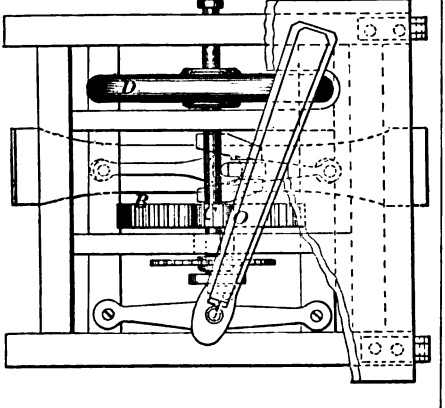

30464

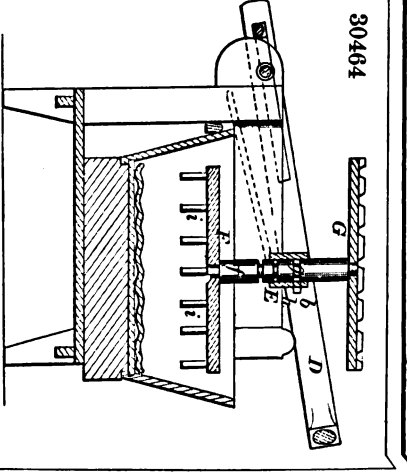

30417

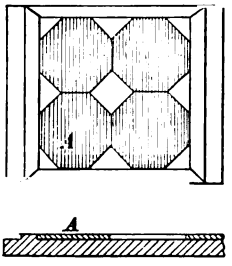

30418

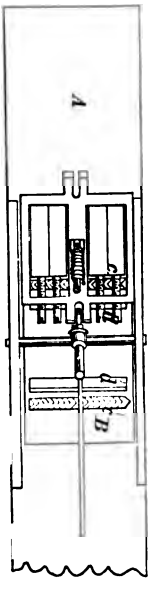

30419

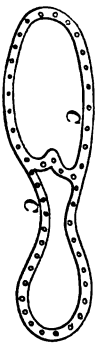

30420

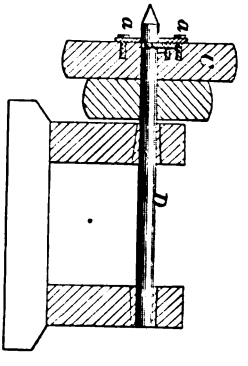

30421

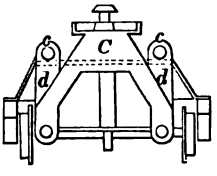

30422

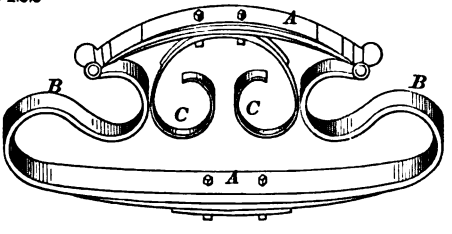

30423

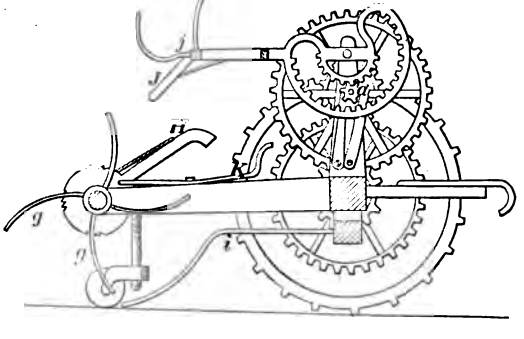

30424

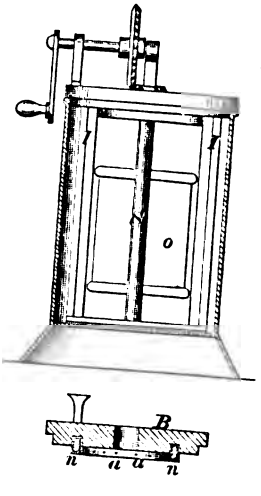

30425

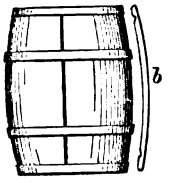

30426

30427

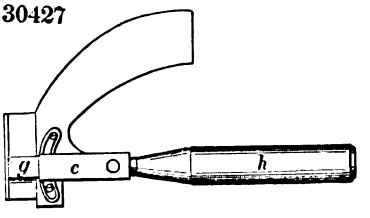

30428

Fig. 1

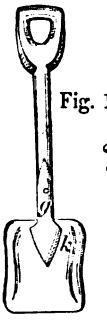

Fig. 2

30429

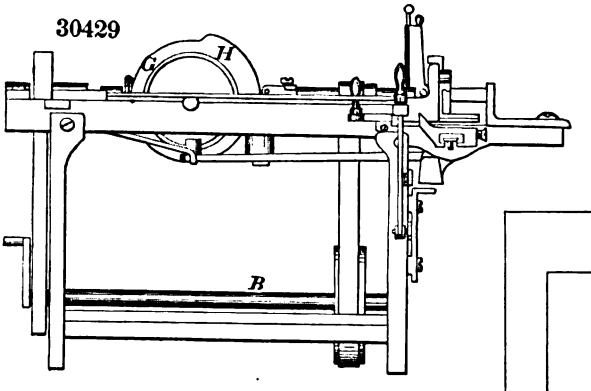

30430

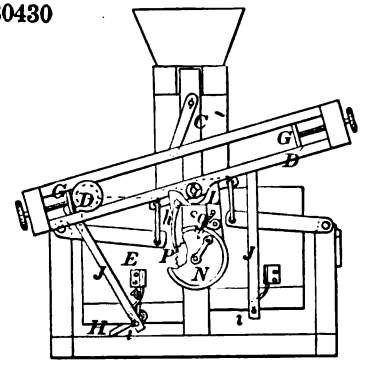

30431

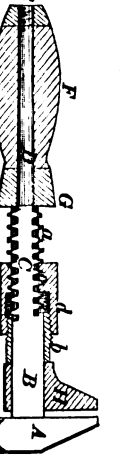

30432

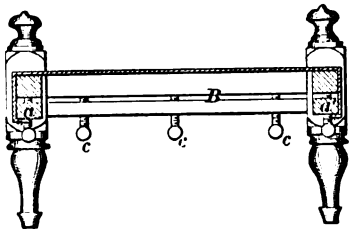

30433

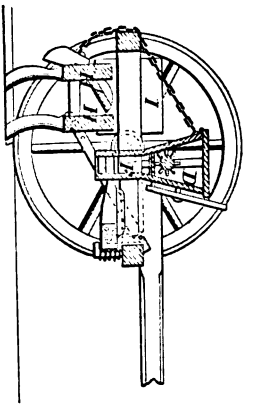

30435

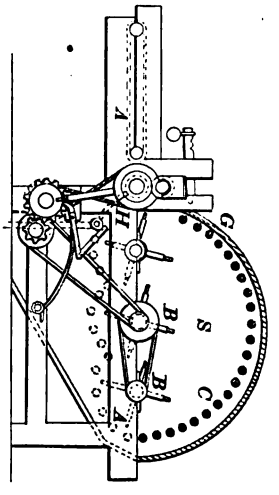

30436

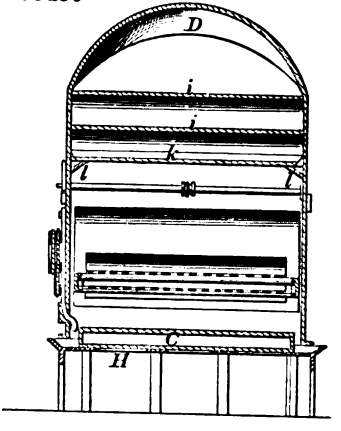

30437

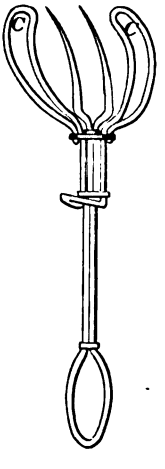

30438

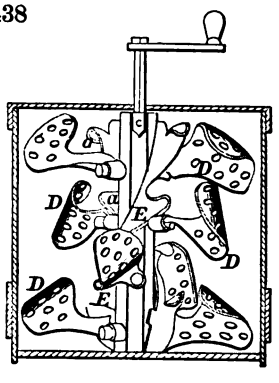

30440

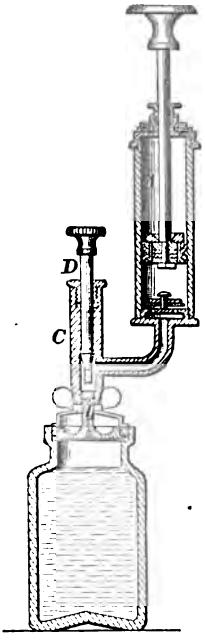

30441

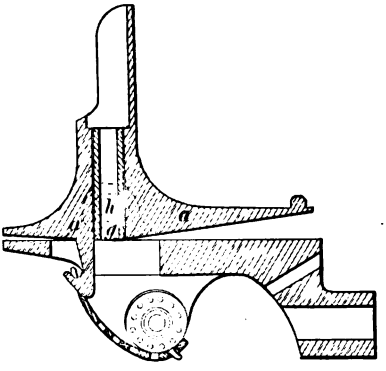

30442

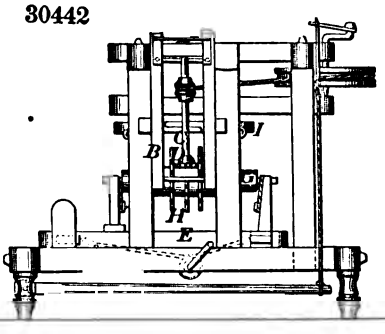

30444

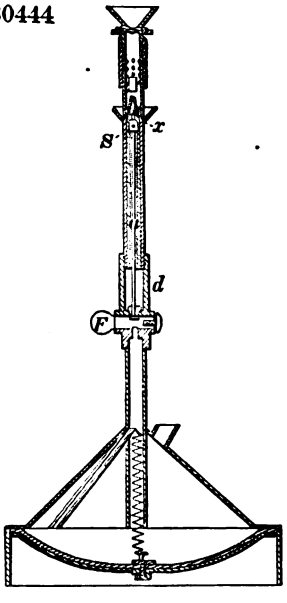

30443

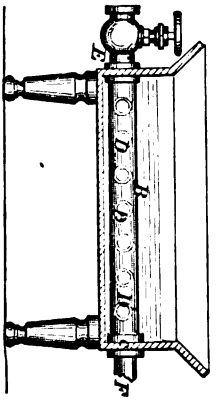

30445

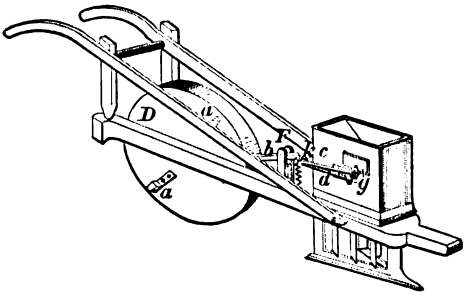

30446

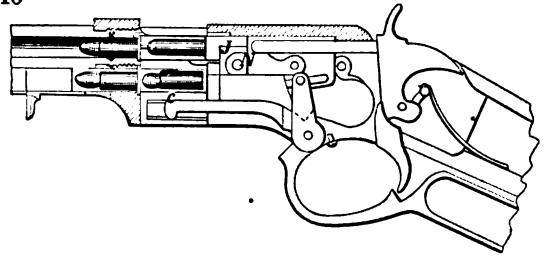

30447

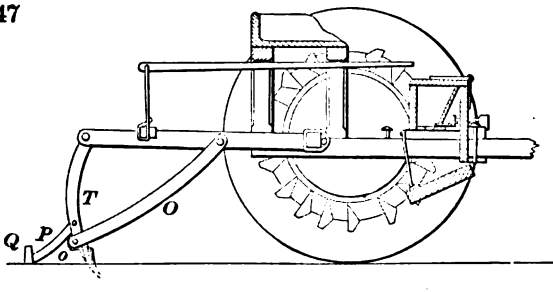

30448

Fig. 2

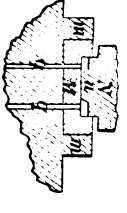

Fig. 1

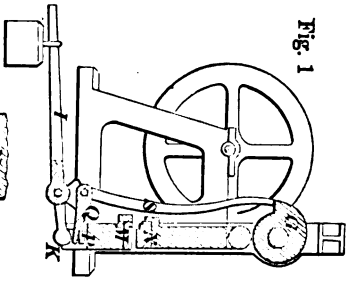

30449

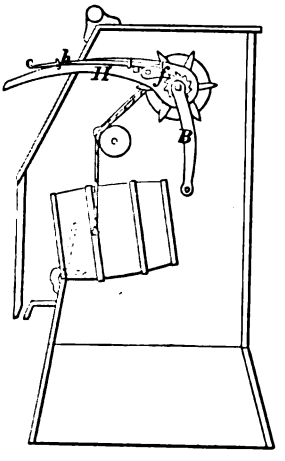

30450

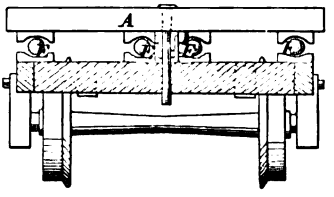

30451

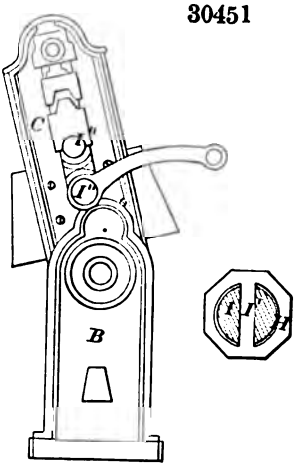

30452

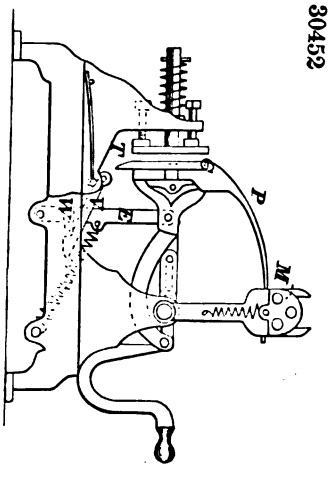

30454

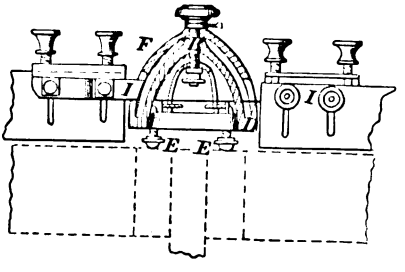

30453

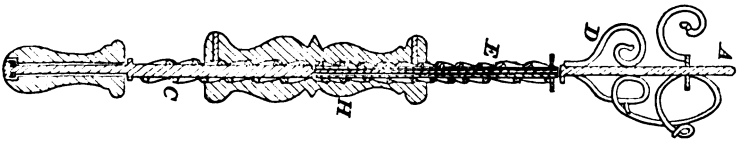

30454

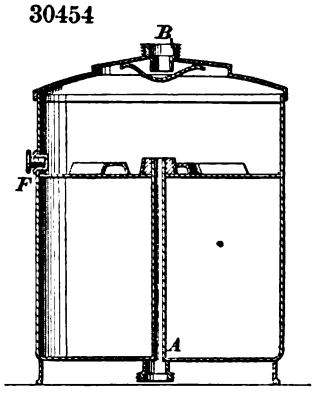

30455

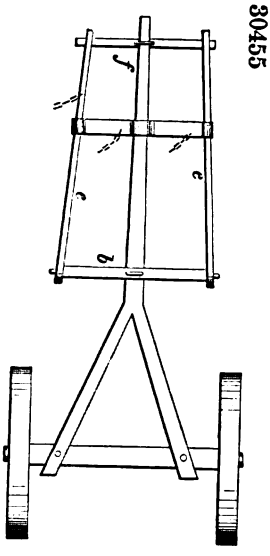

30456

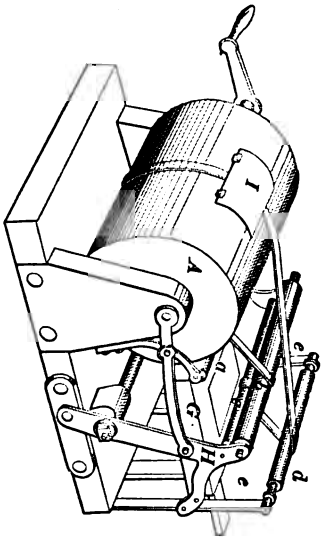

30458

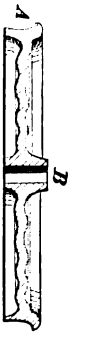

30457

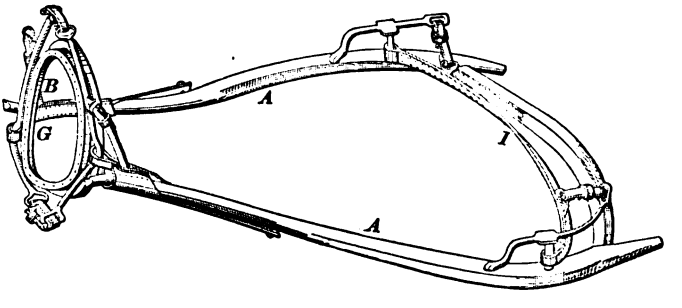

30459

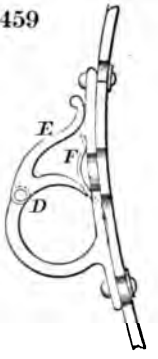

30460

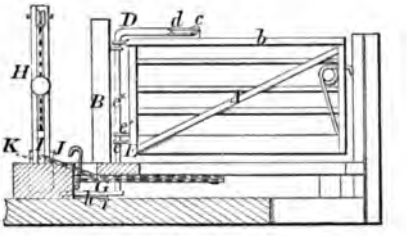

30461

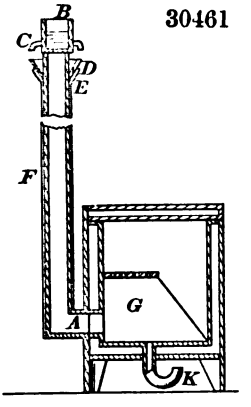

30462

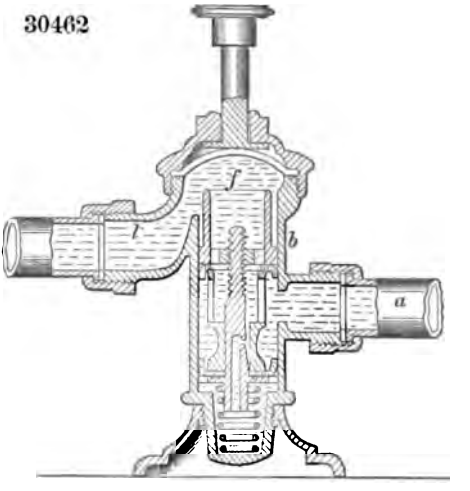

30463

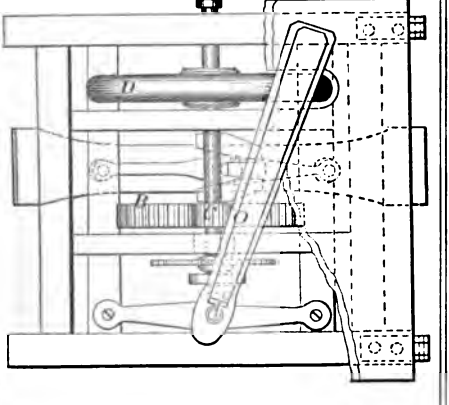

30464

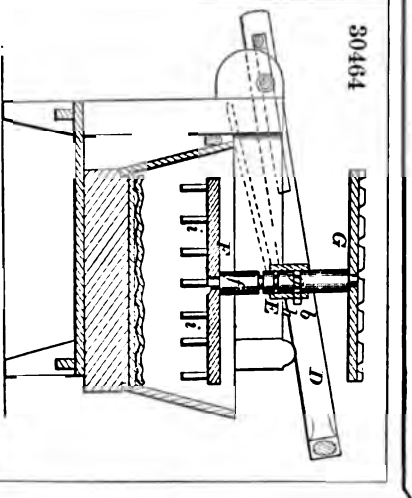

30465

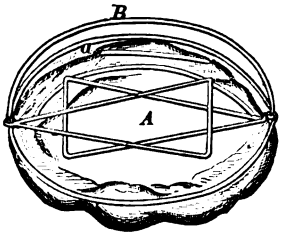

30466

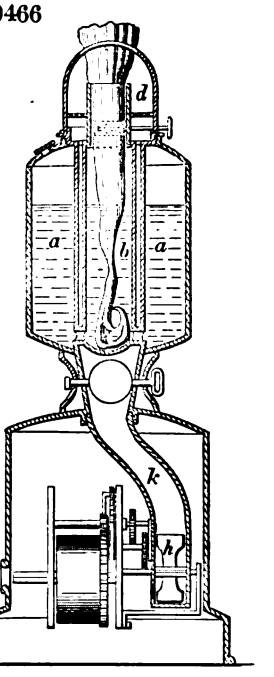

30467

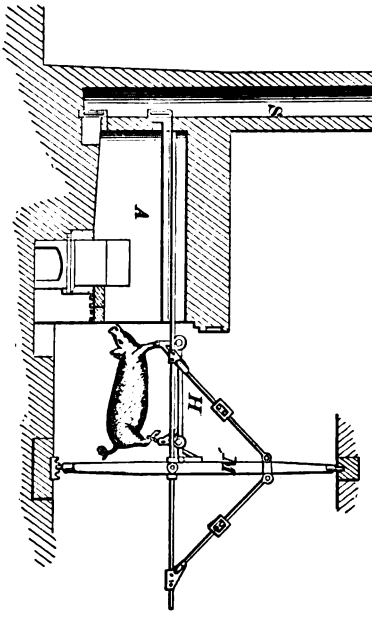

30470

30468

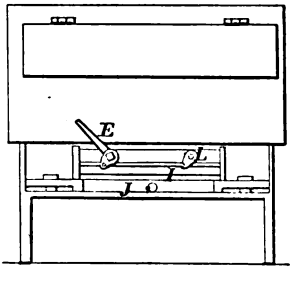

30469

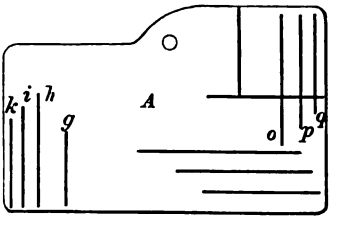

30471

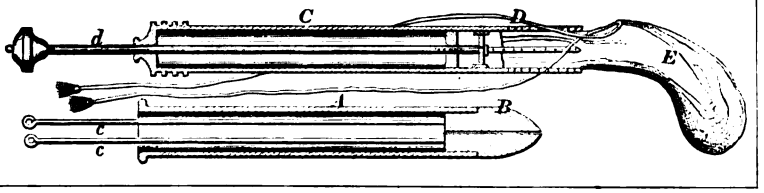

30472

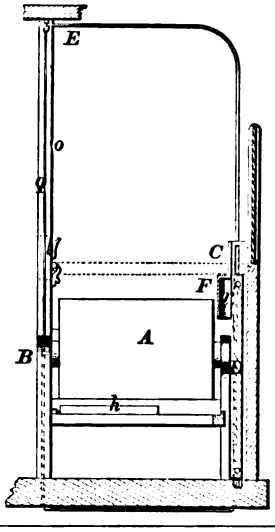

30473

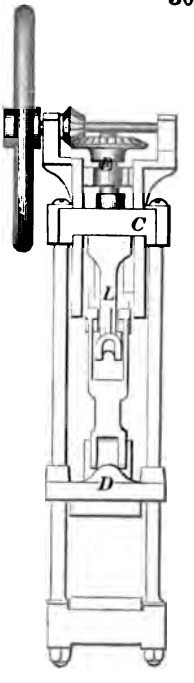

30474

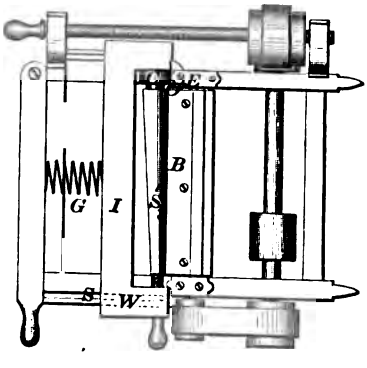

30475

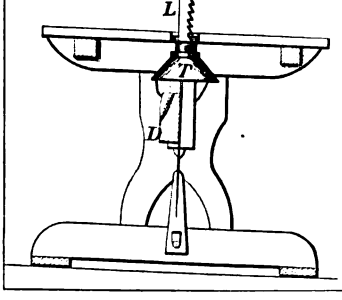

30476

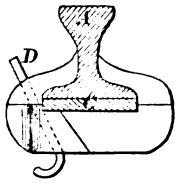

30477

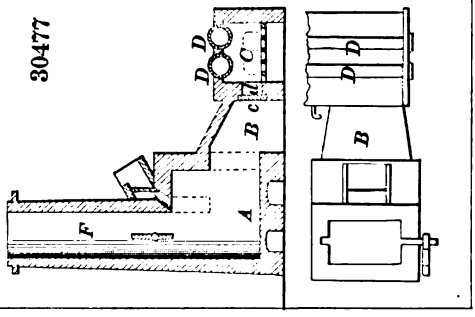

30478

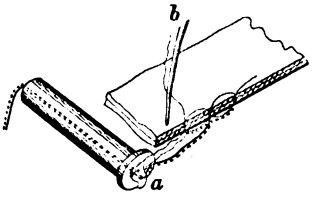

30479

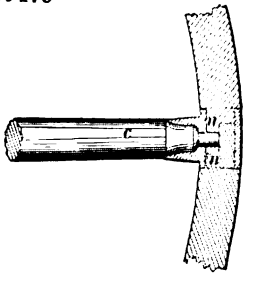

30480

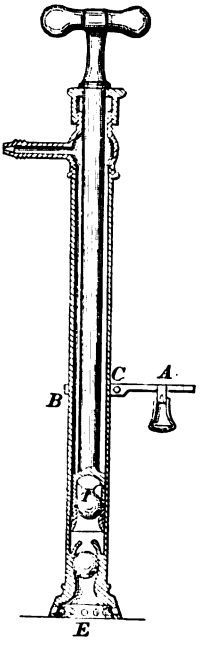

30481

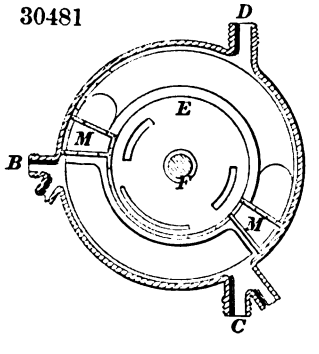

30482

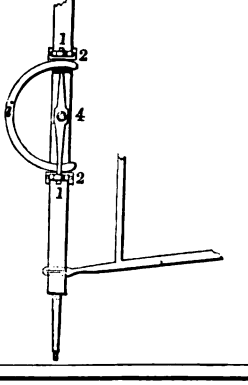

30483

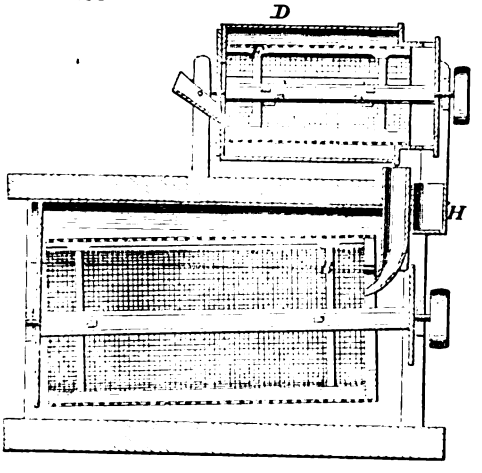

30484

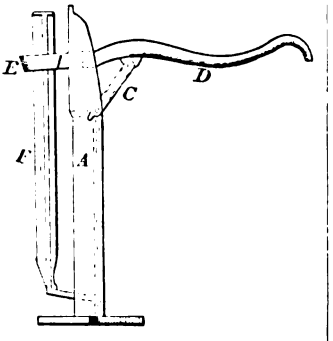

30485

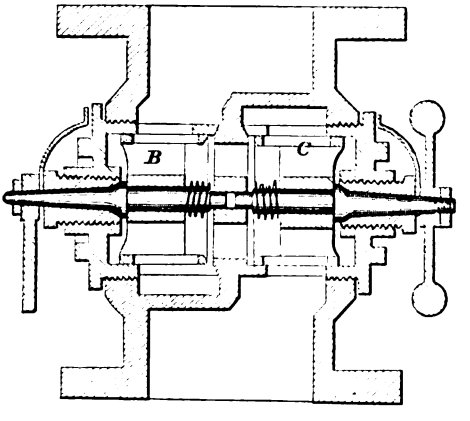

30486

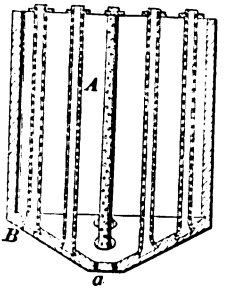

30487

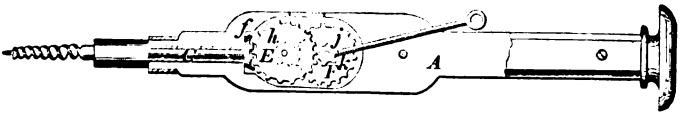

30488

30489

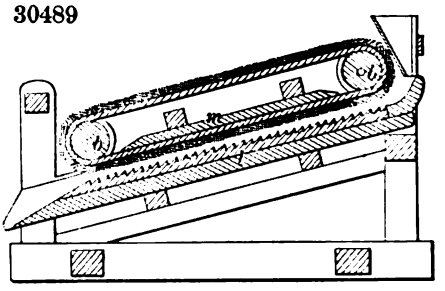

30490

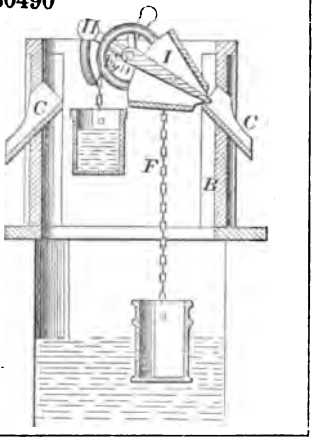

30491

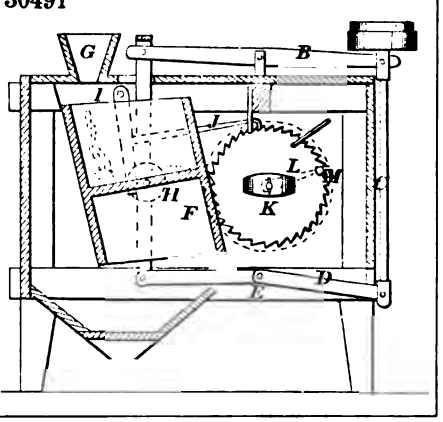

30493

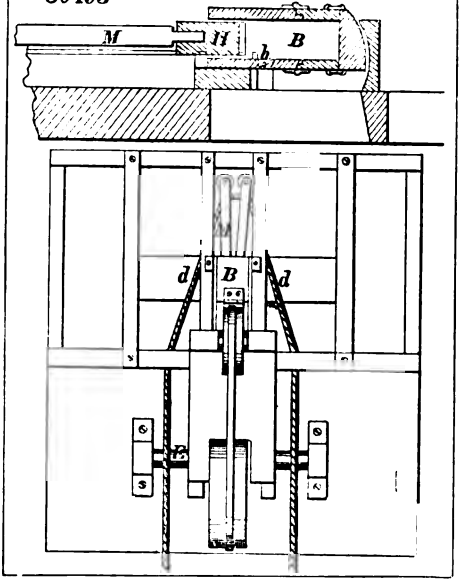

30492

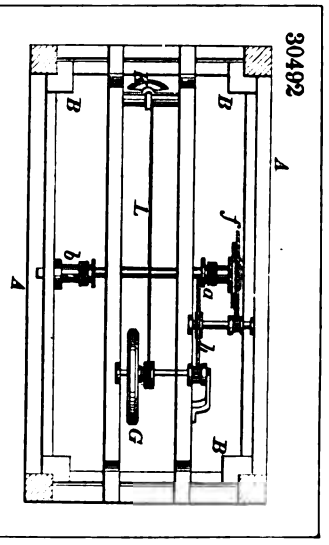

30494

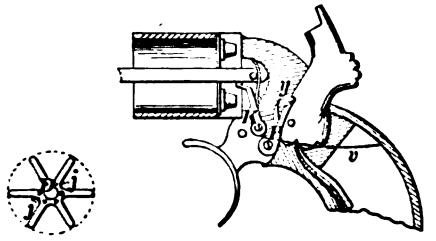

30495

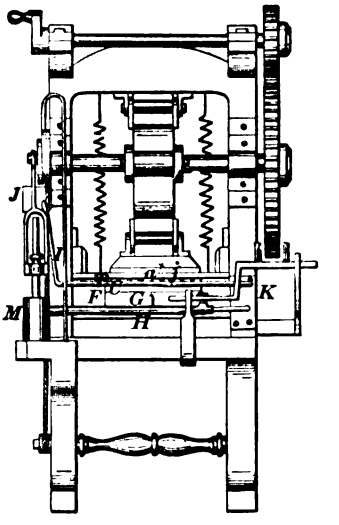

30496

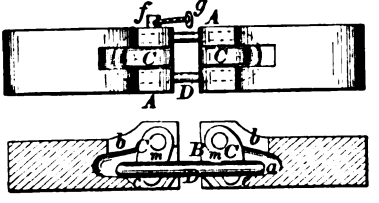

30497

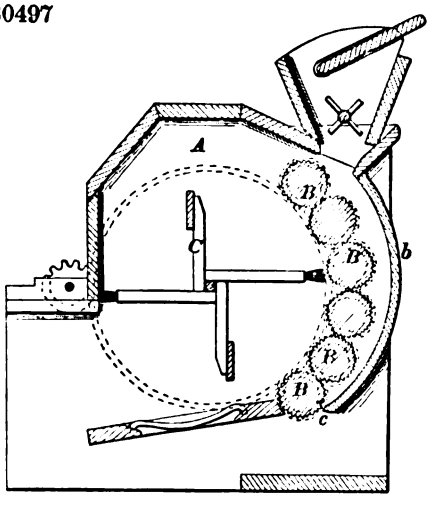

30445

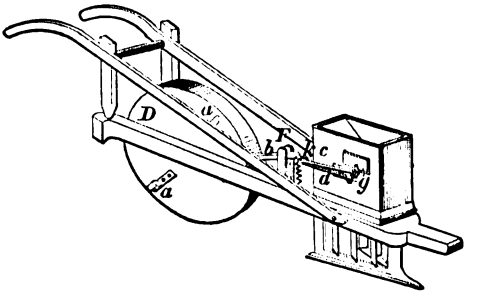

30446

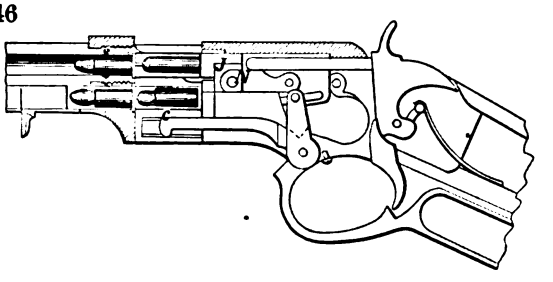

30447

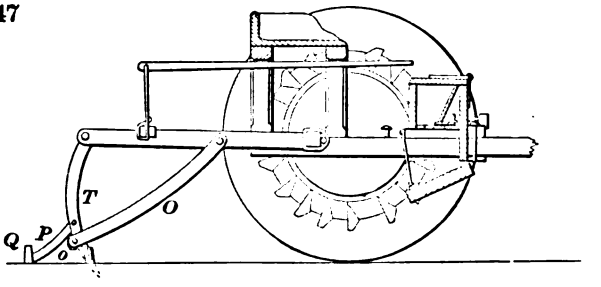

30448

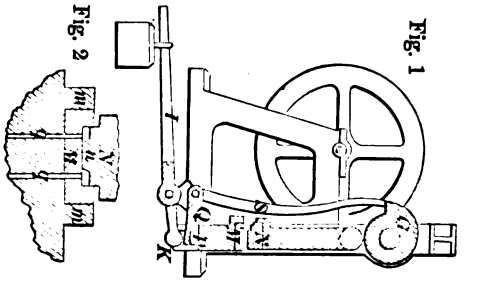

30449

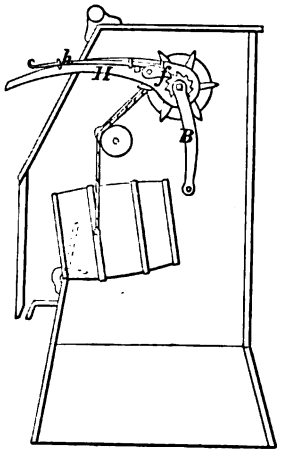

30450

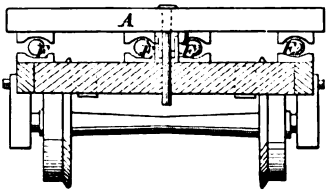

30451

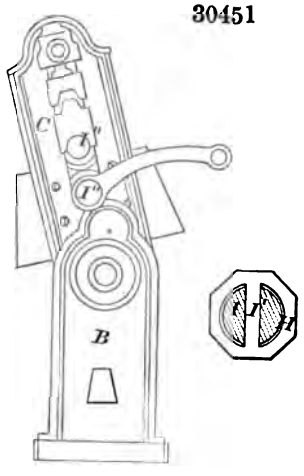

30452

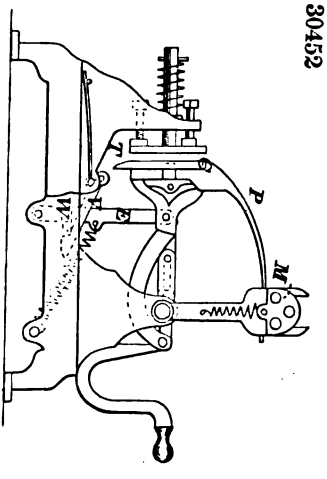

30454

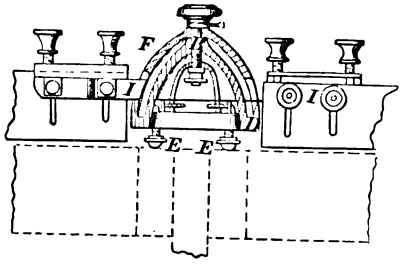

30453

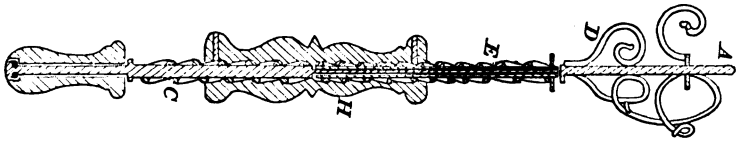

30454

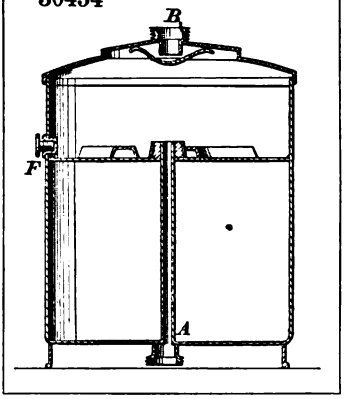

30455

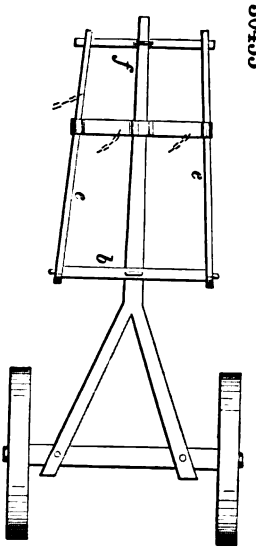

30456

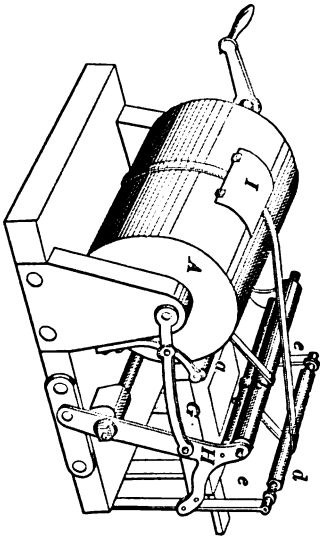

30458

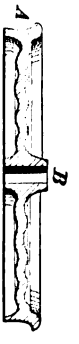

30457

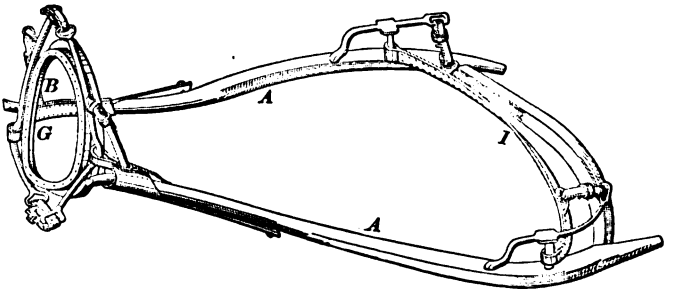

30459

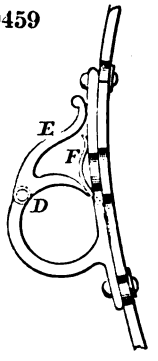

30460

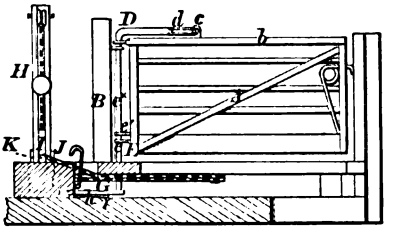

30461

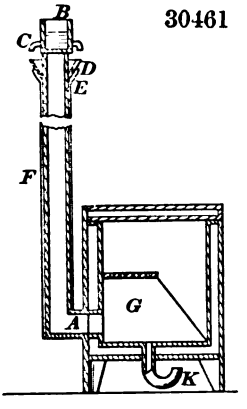

30462

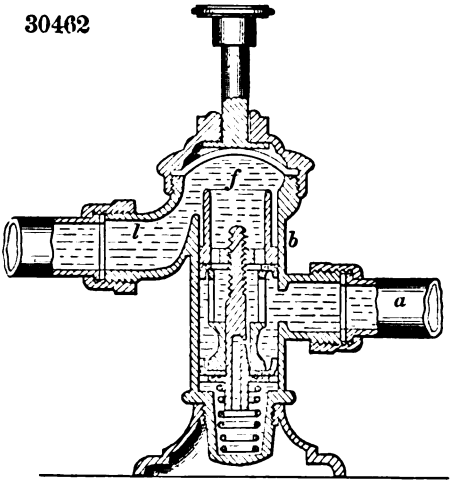

30463

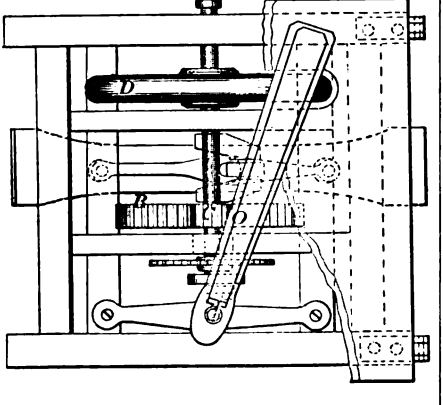

30464

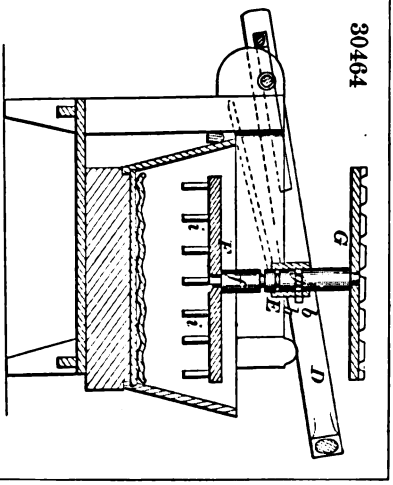

30465

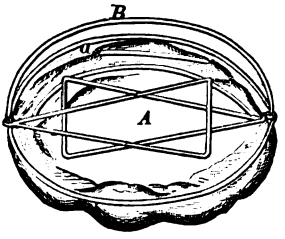

30466

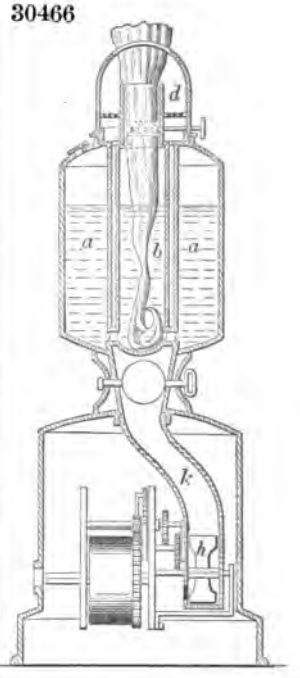

30467

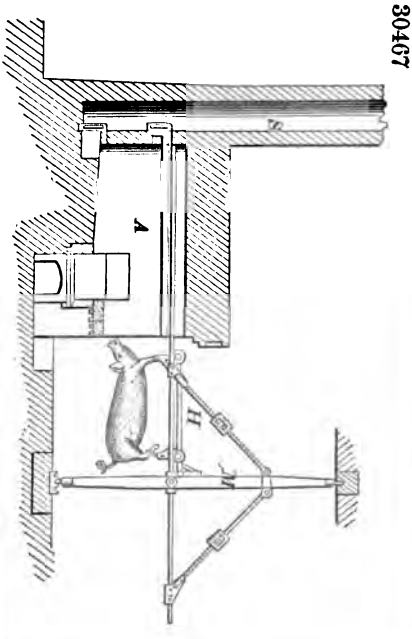

30470

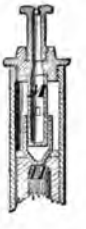

30468

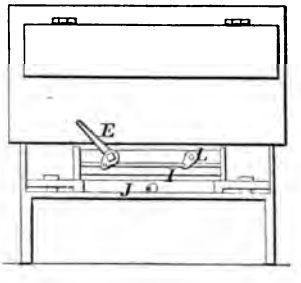

30469

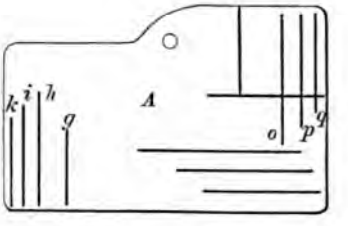

30471

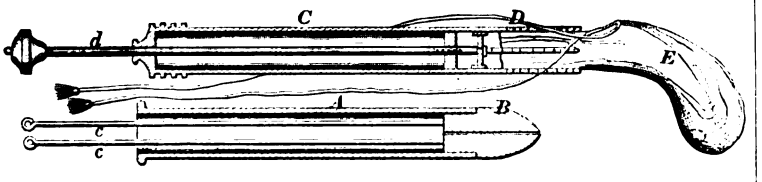

30472

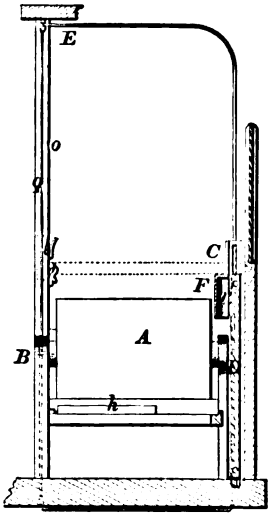

30473

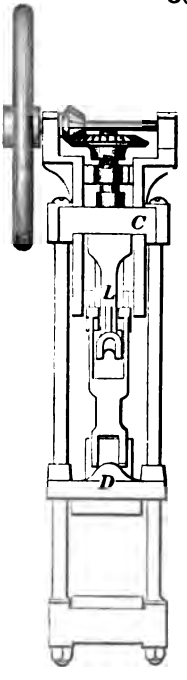

30474

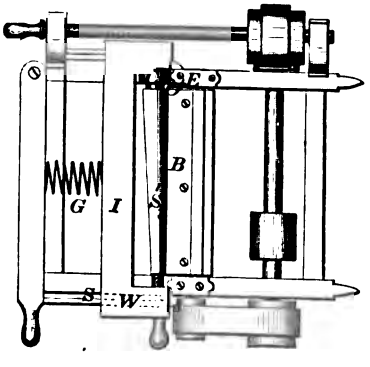

30475

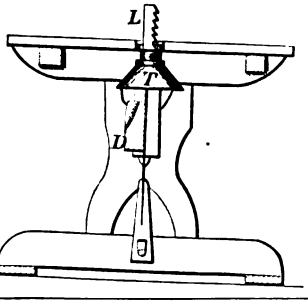

30476

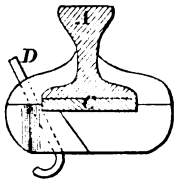

30477

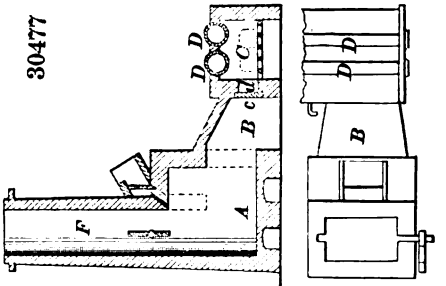

30478

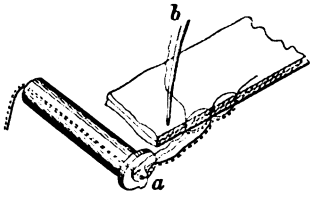

30479

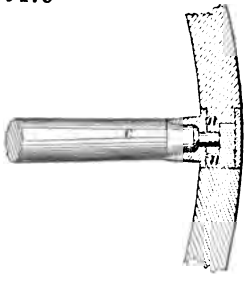

30480

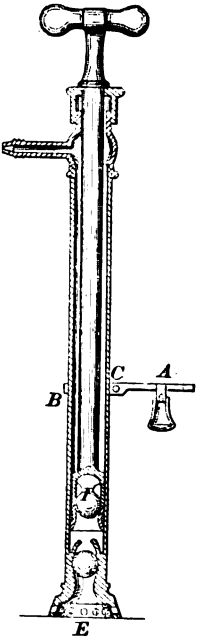

30481

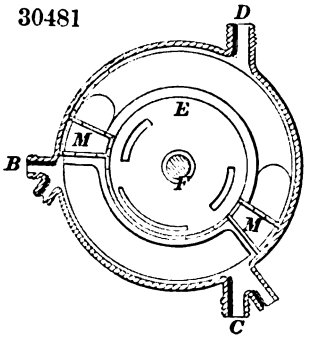

30482

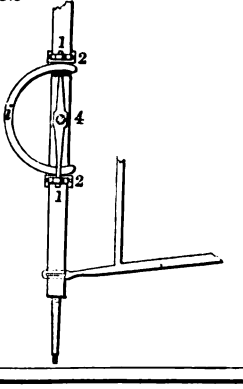

30483

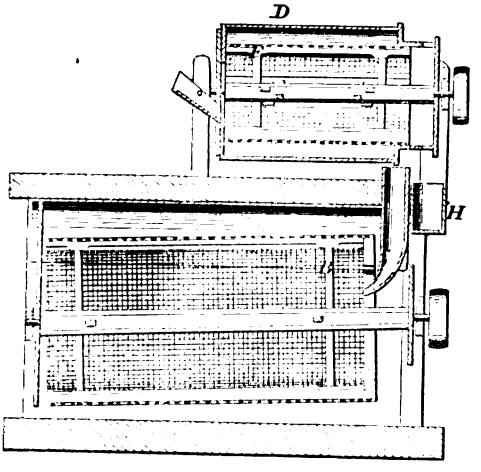

30484

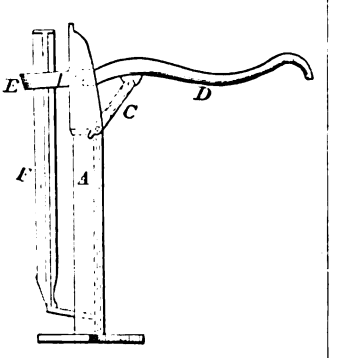

30485

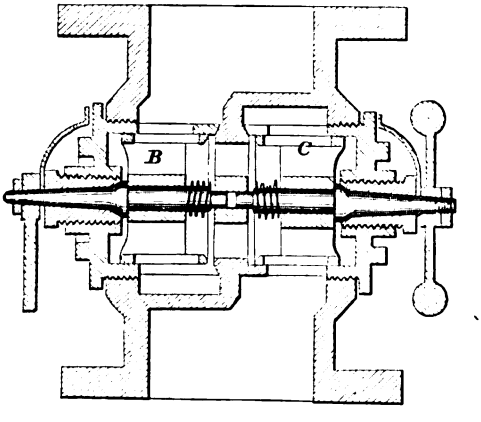

30486

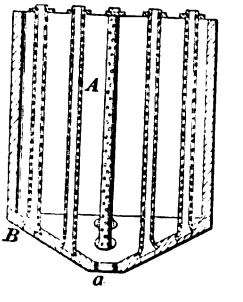

30487

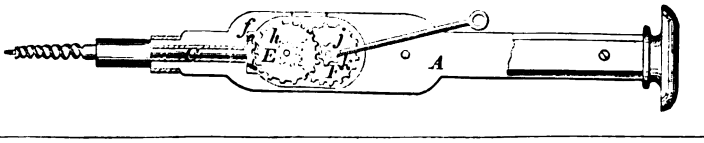

30488

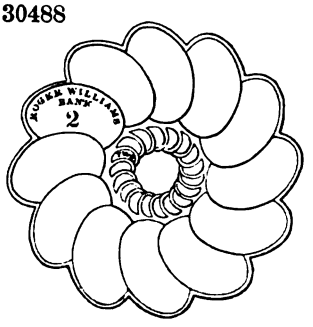

30489

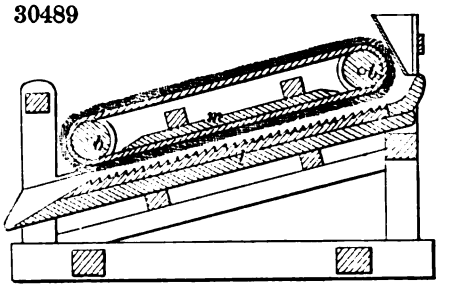

30490

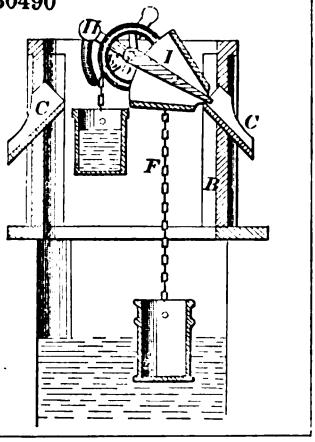

30491

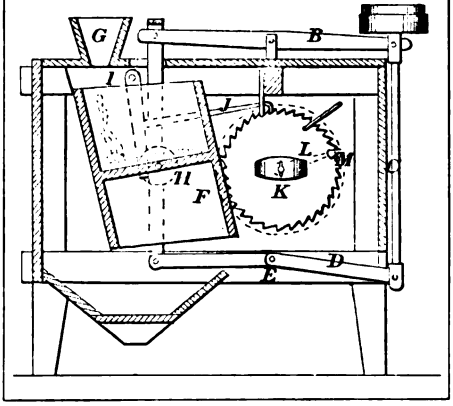

30493

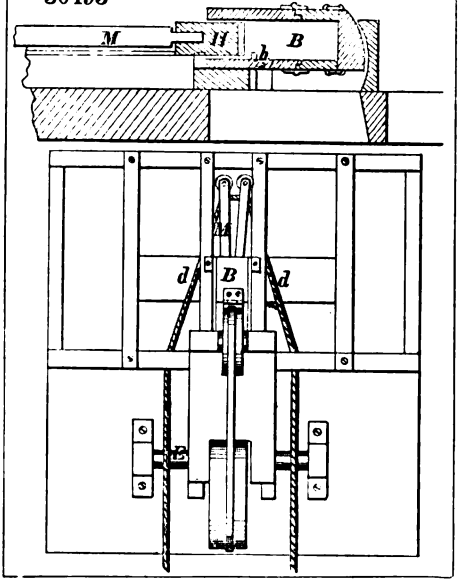

30492

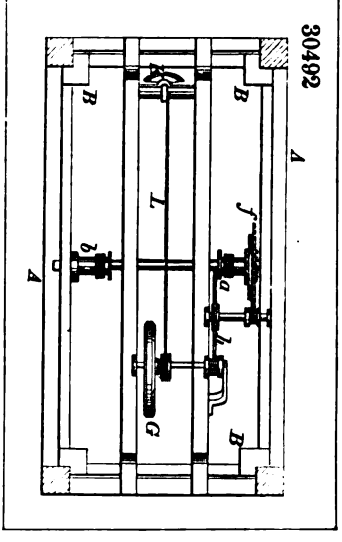

30494

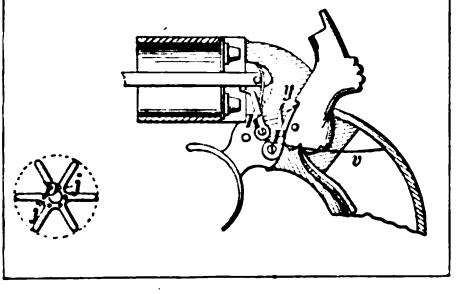

30495

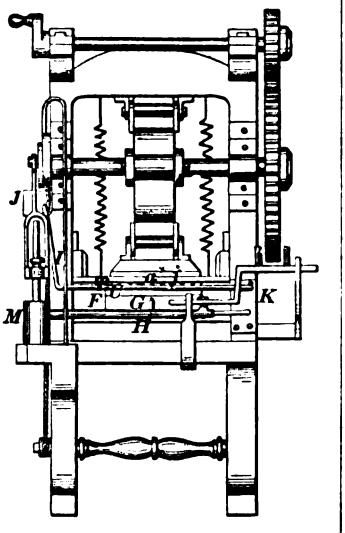

30496

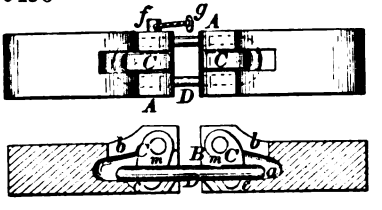

30497

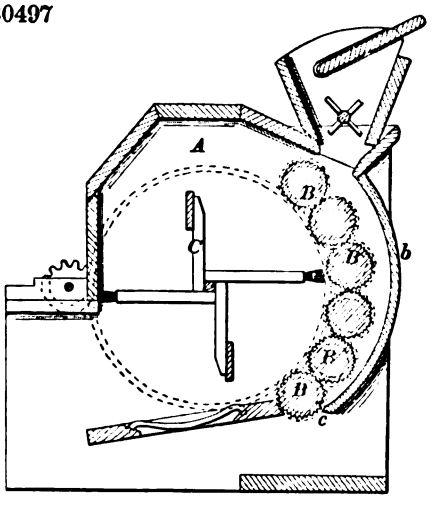

30498

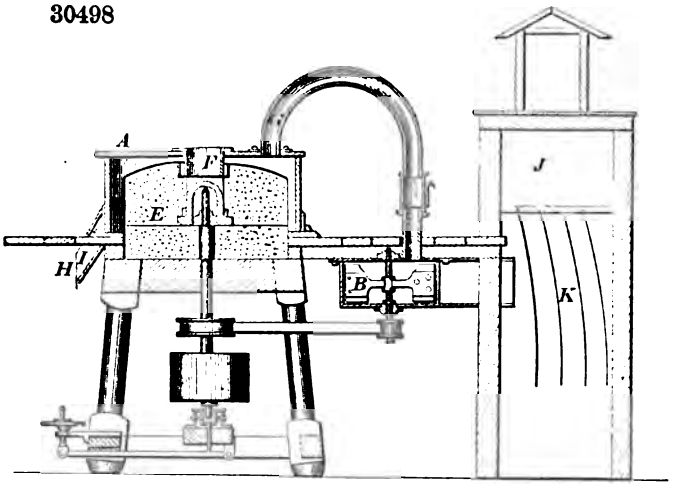

30500

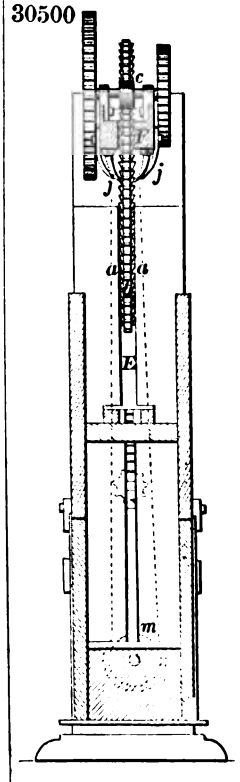

30499

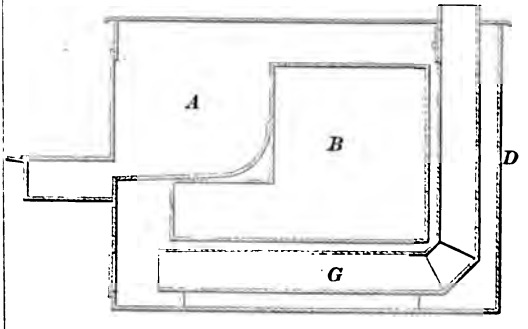

30501

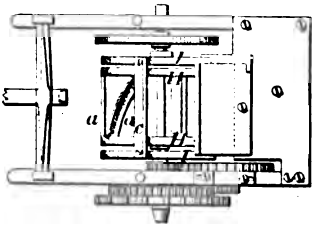

30502

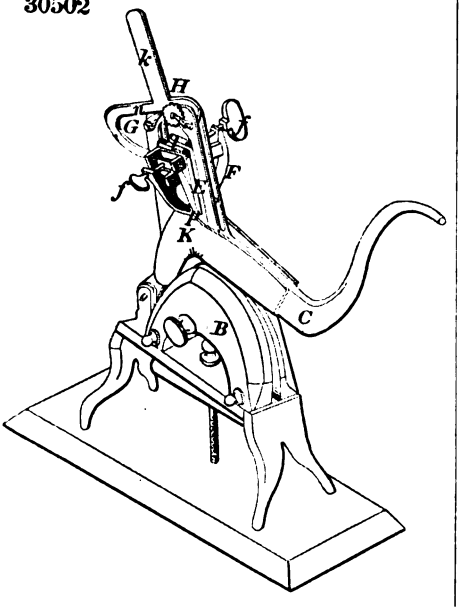

30503

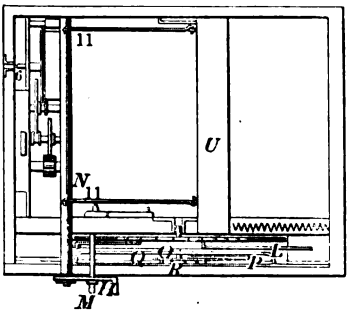

30504

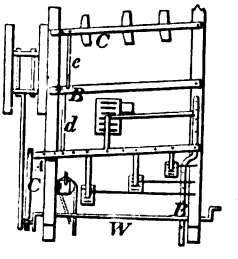

30505

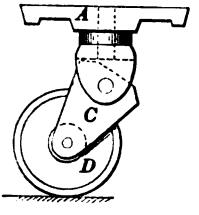

30506

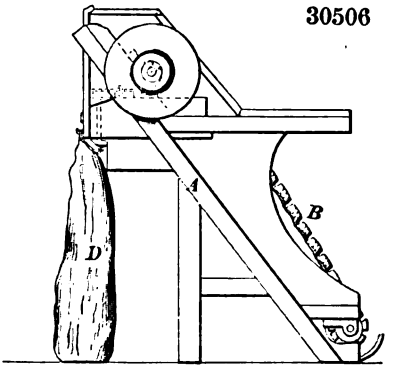

30507

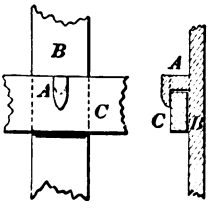

30508

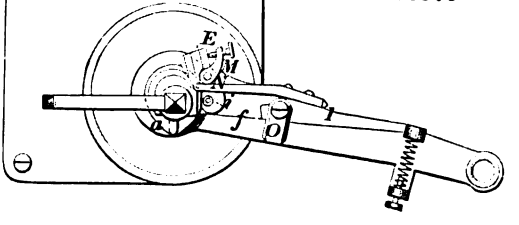

30509

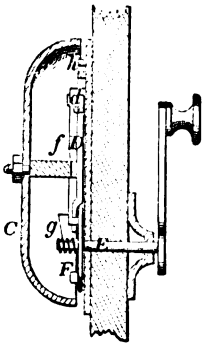

30510

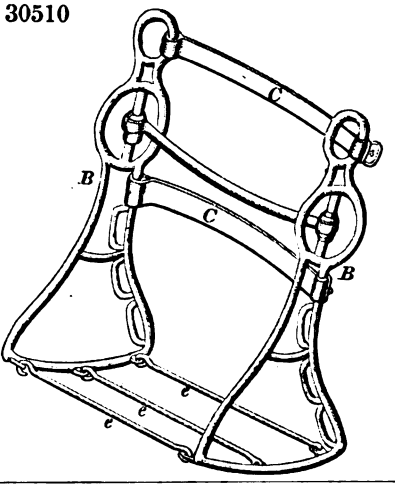

30512

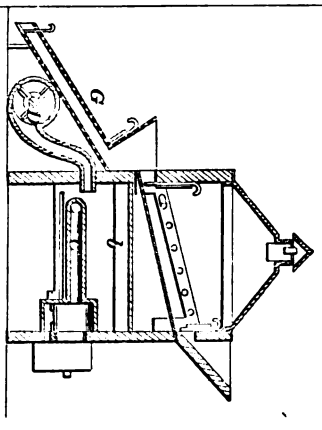

30513

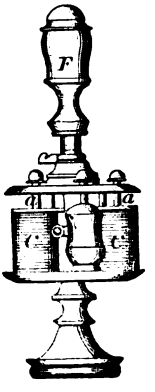

30514

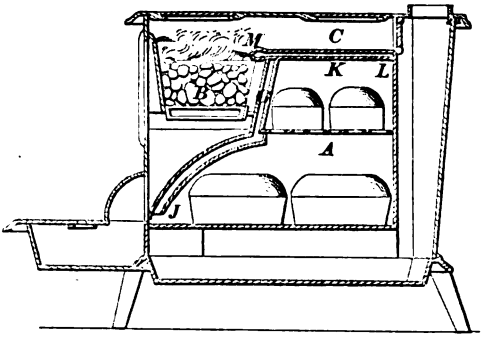

30515

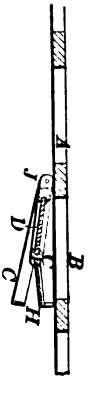

30516

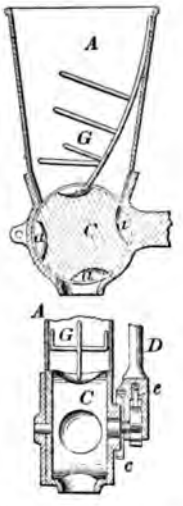

30517

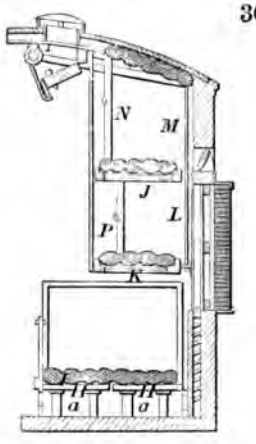

30520

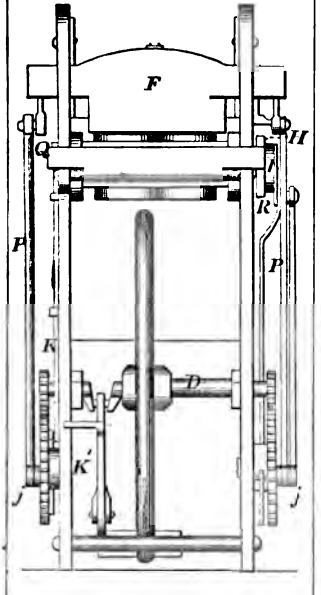

30518

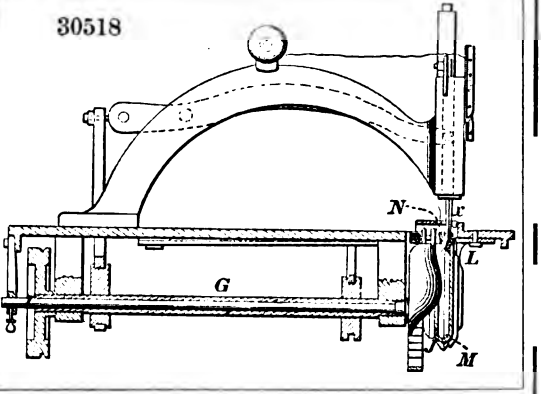

30522

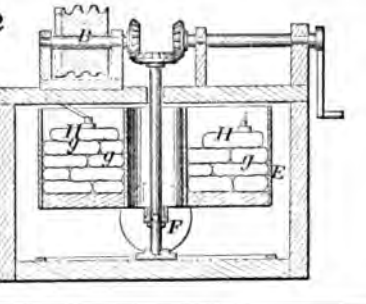

30519

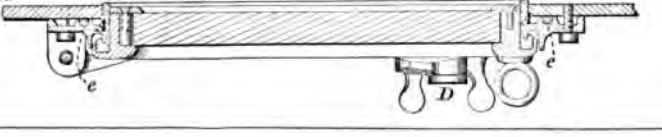

30523

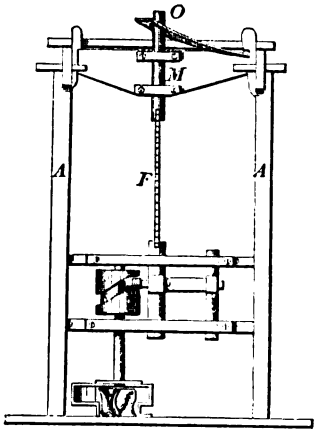

30525

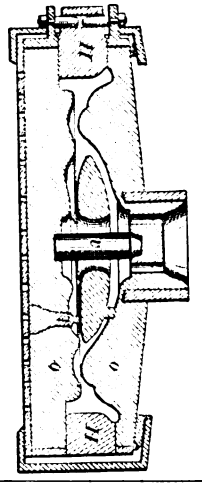

30527

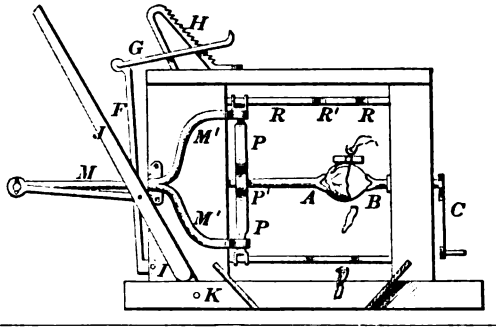

30528

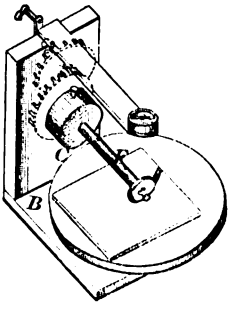

30526

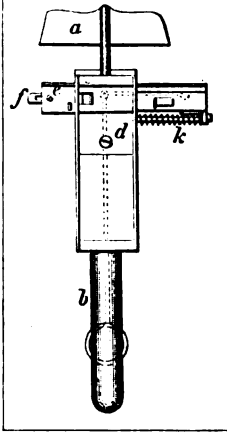

30529

Fig. 1

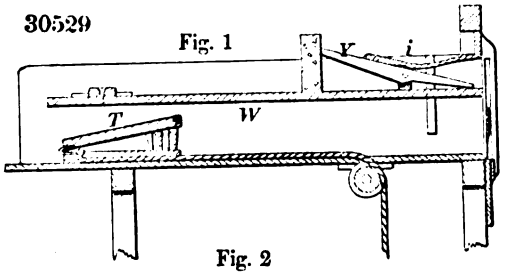

Fig. 2

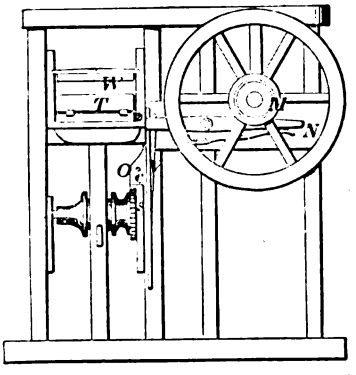

30533

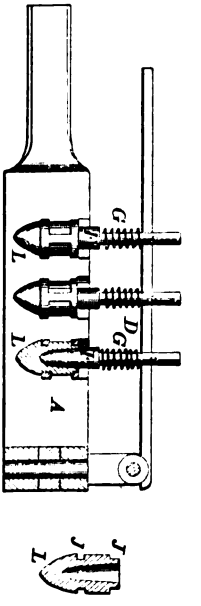

30530

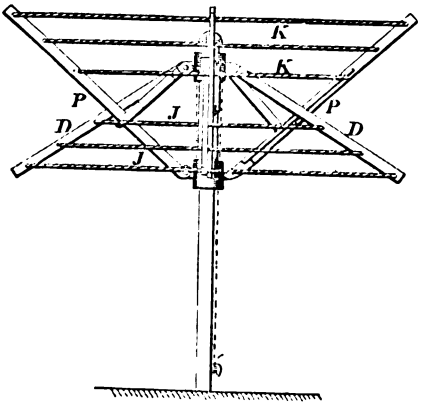

30531

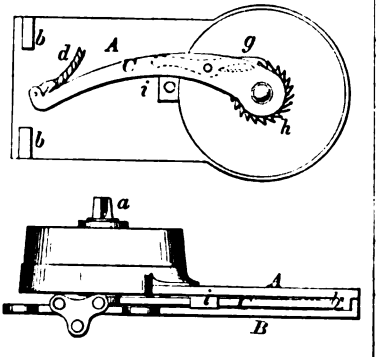

30532

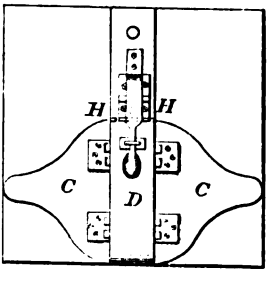

30534

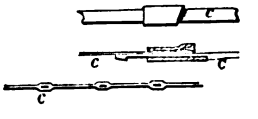

30536

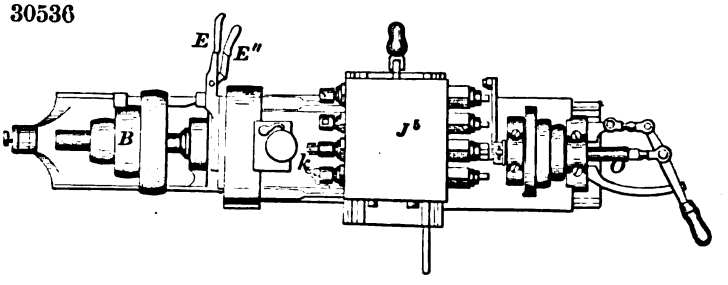

30535

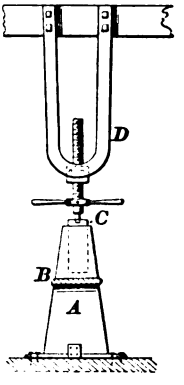

30537

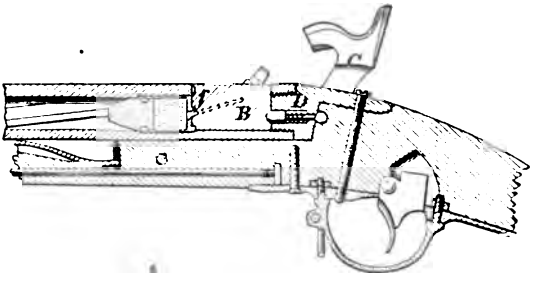

30539

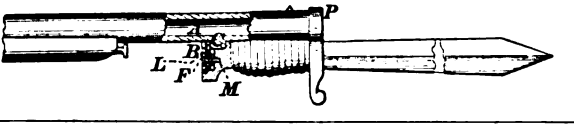

30540

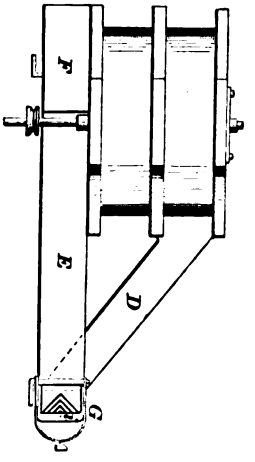

30538

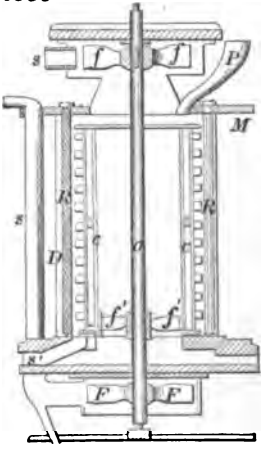

30541

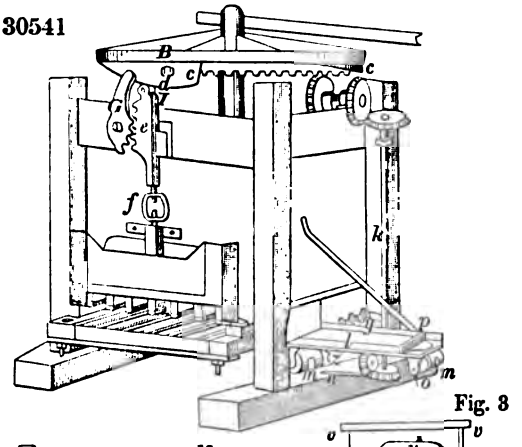

Fig. 3

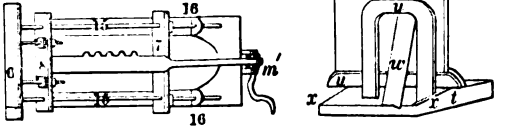

30542

30543

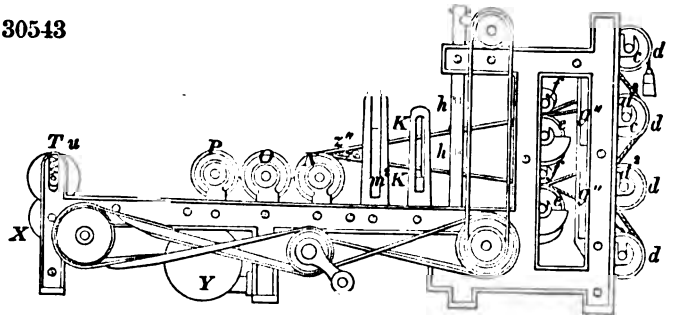

30545

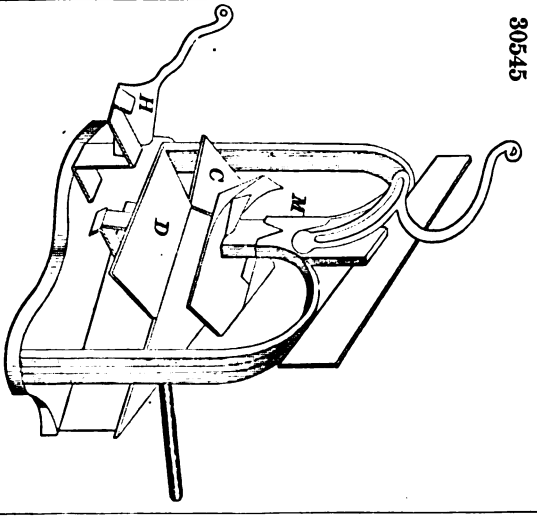

30544

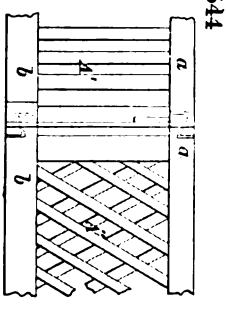

30546

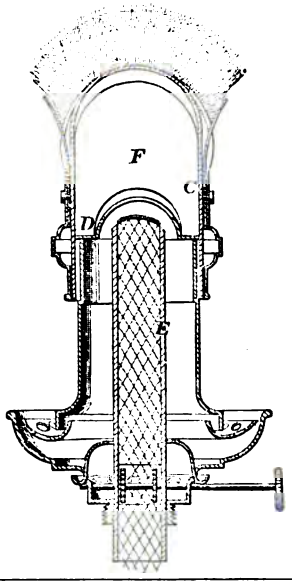

30547

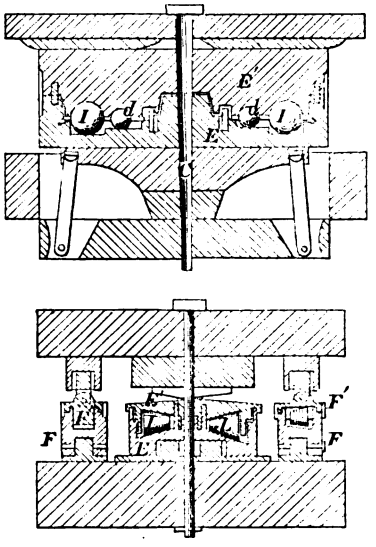

30549

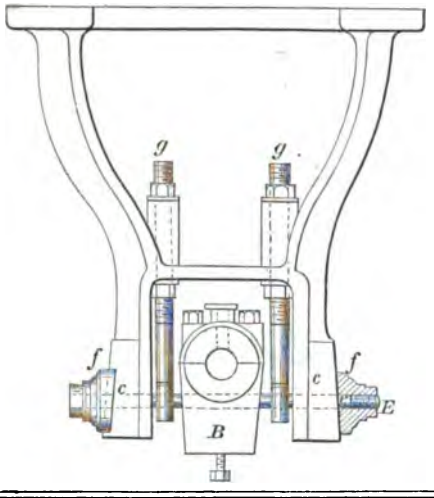

30548

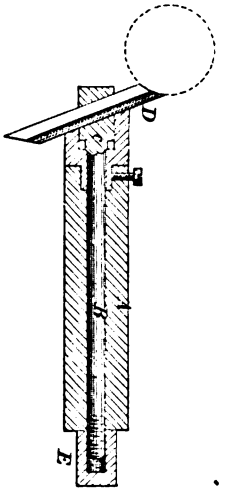

30551

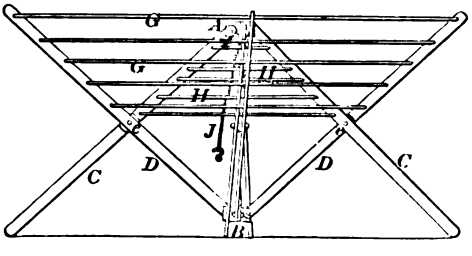

30550

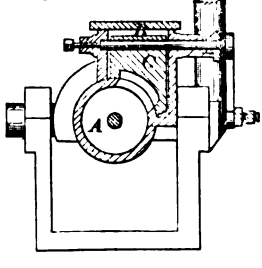

30552

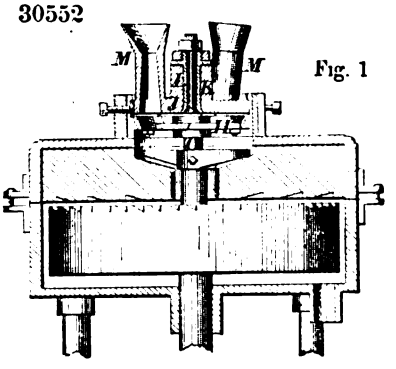

Fig. 1

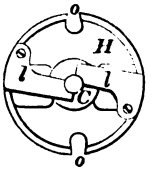

Fig. 2

30553

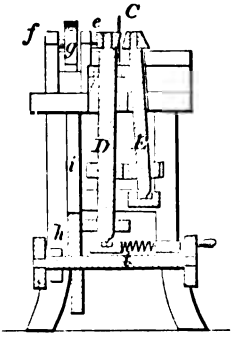

30554

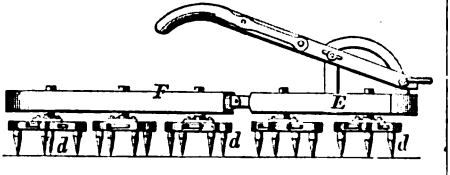

30555

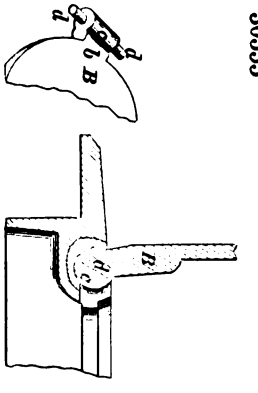

30556

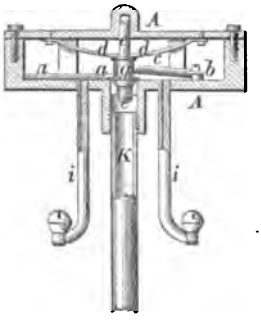

30557

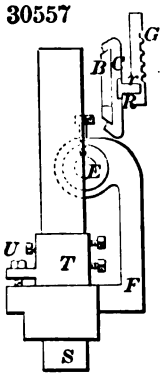

Fig. 1

Fig. 2

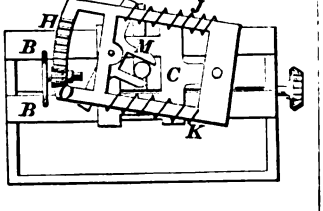

30558

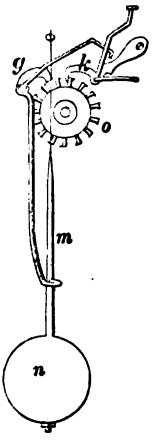

30559

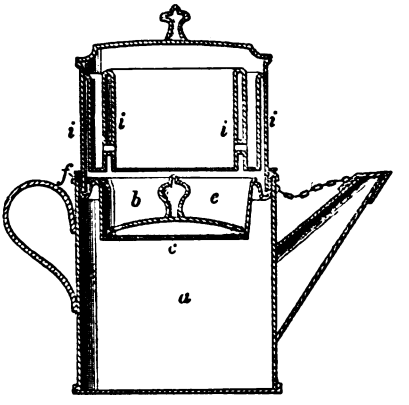

30560

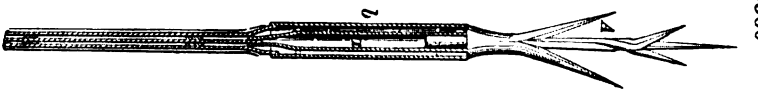

30562

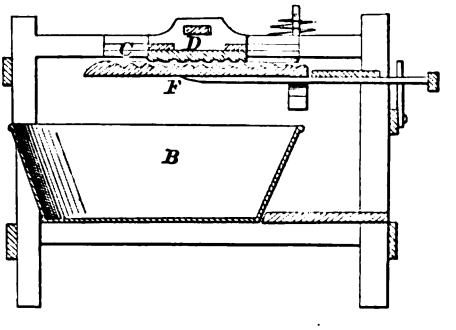

30563

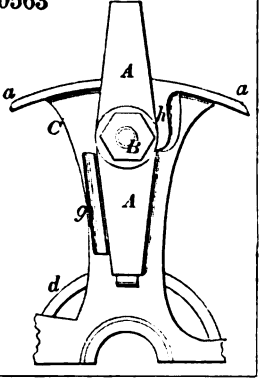

30564

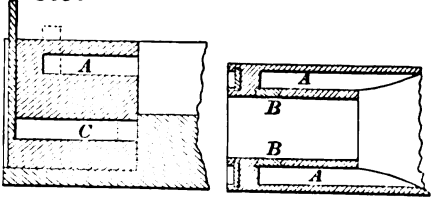

30565

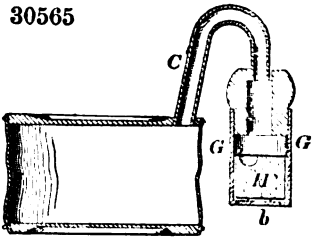

30566

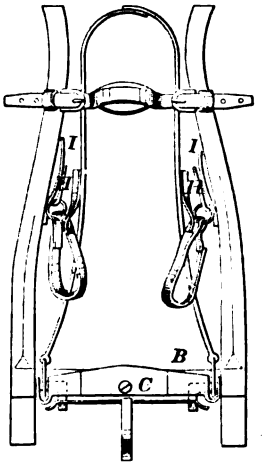

30567

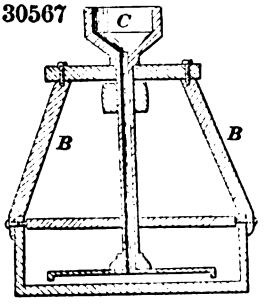

30569

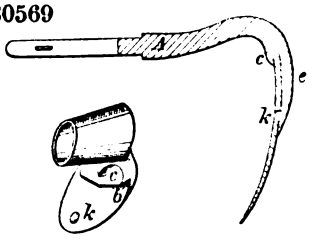

30568

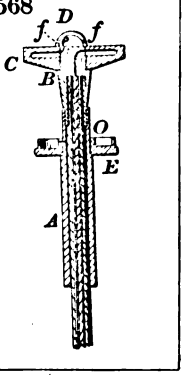

30570

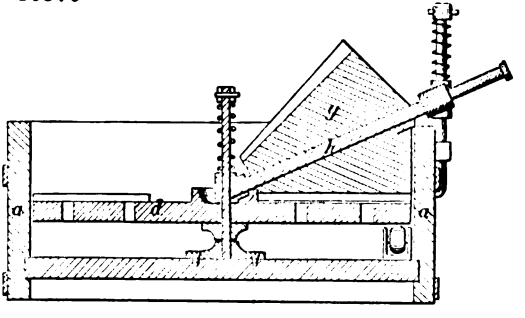

30571

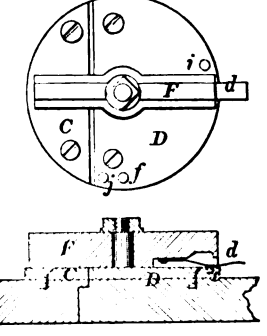

30572

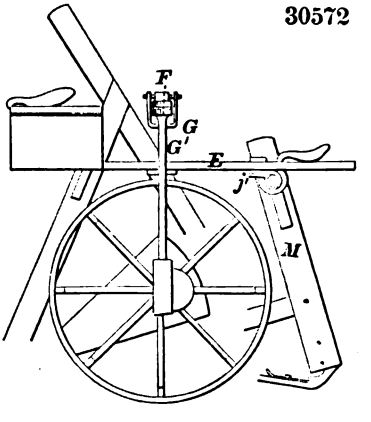

30573

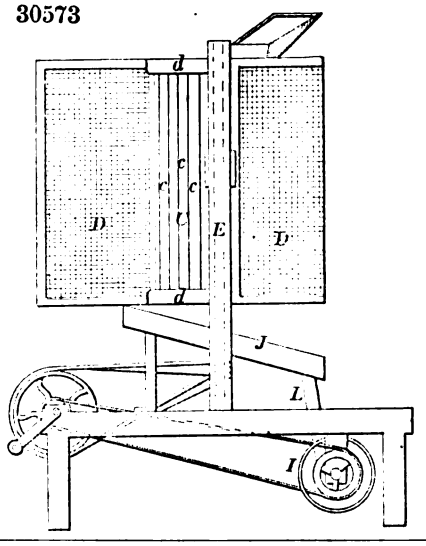

30574

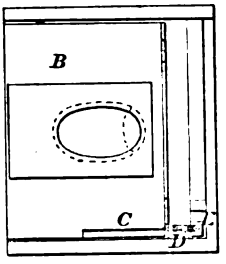

30575

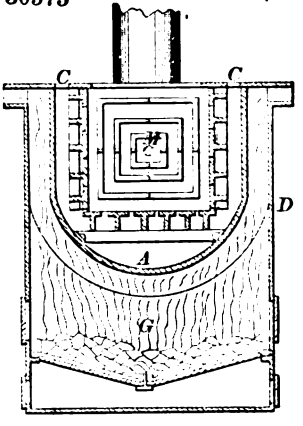

30577

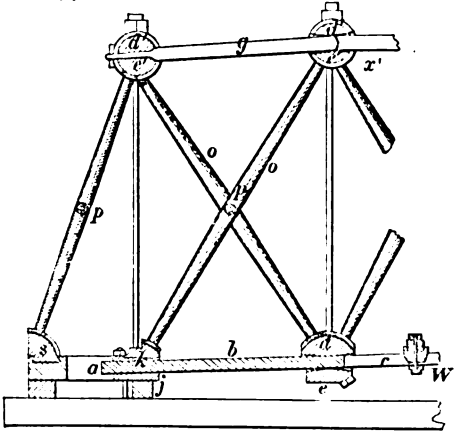

30578

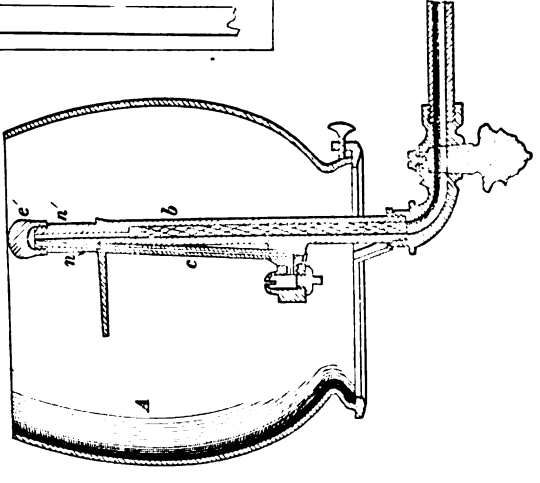

30579

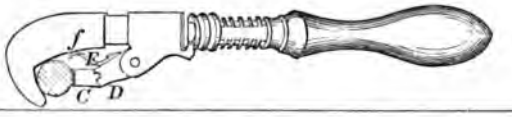

30580

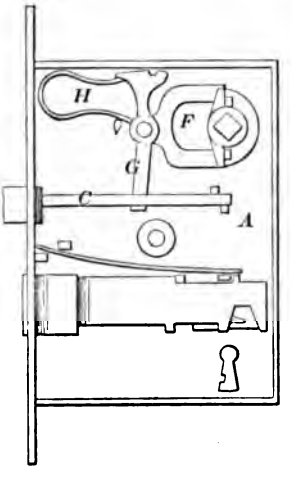

30581

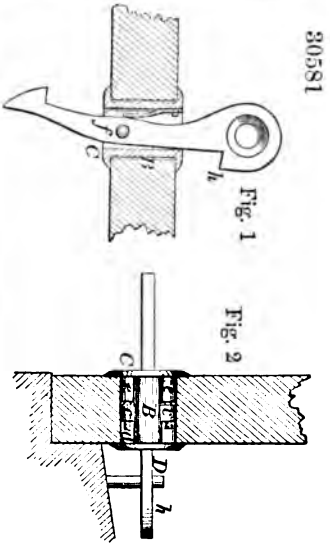

30582

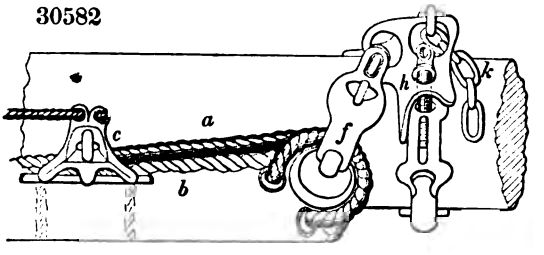

30583

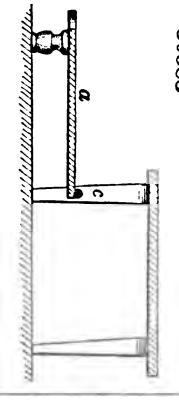

30584

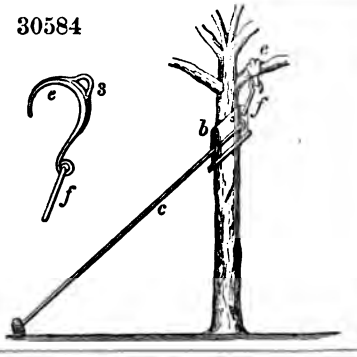

30585

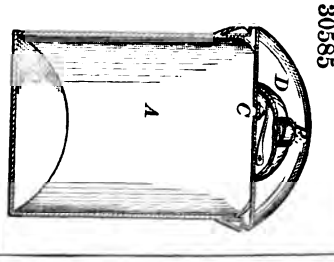

30586

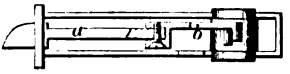

30587

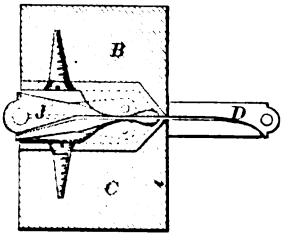

30588

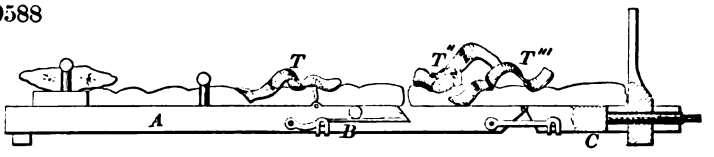

30589

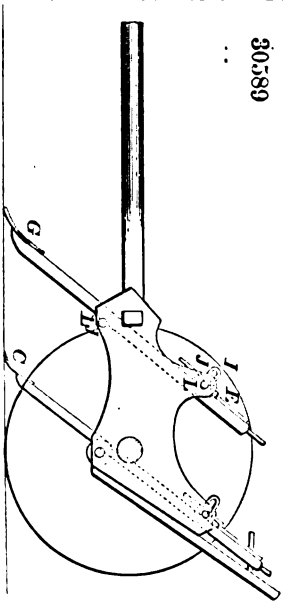

30590

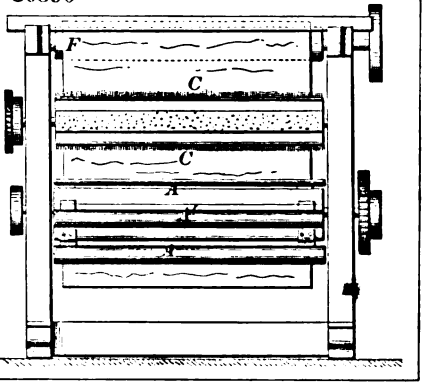

30592

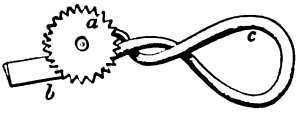

30591

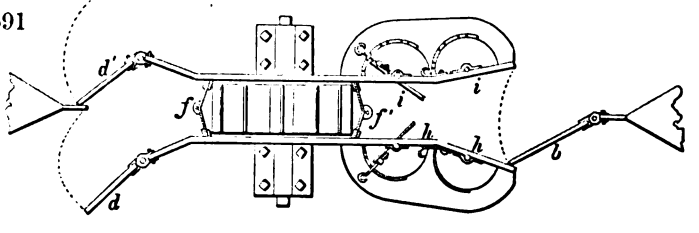

30594

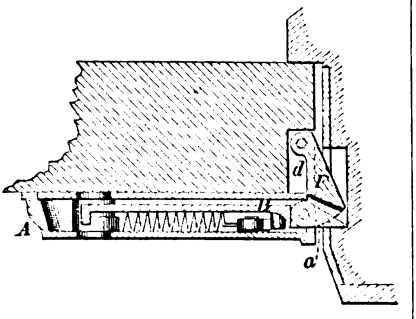

30595

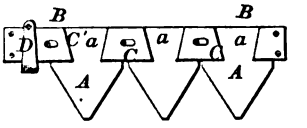

30596

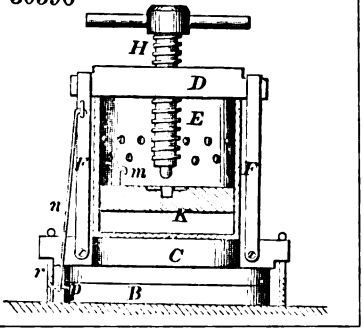

30597

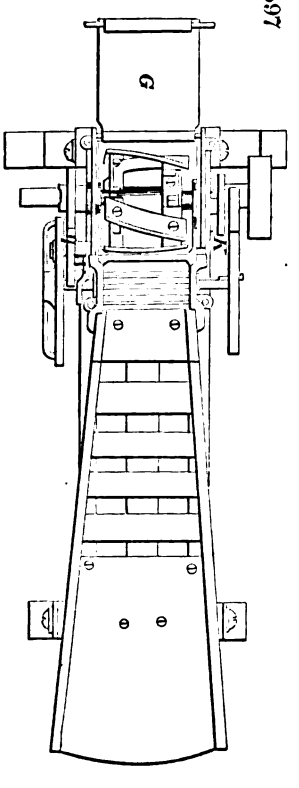

30598

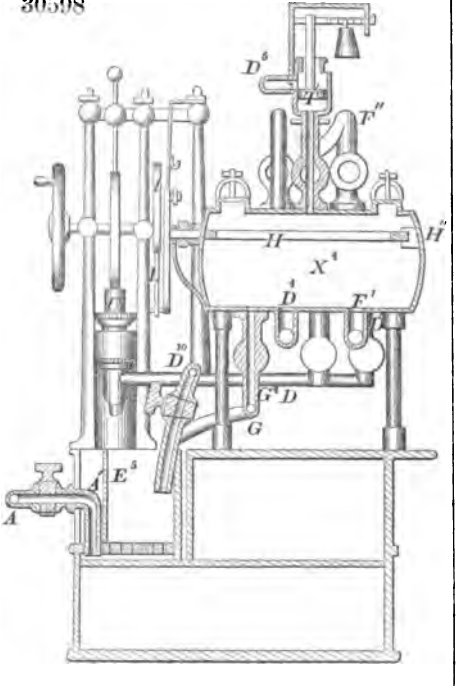

30599

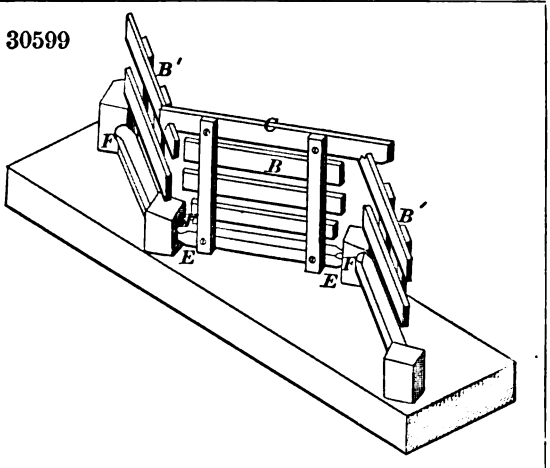

30600

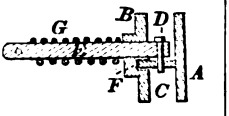

30601

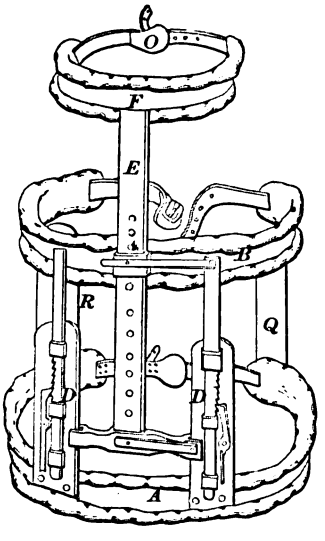

30602

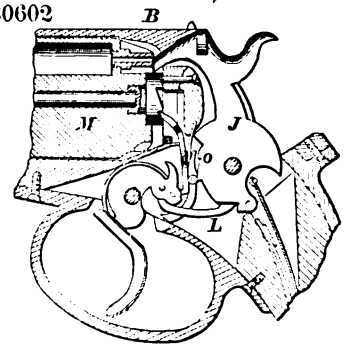

30604

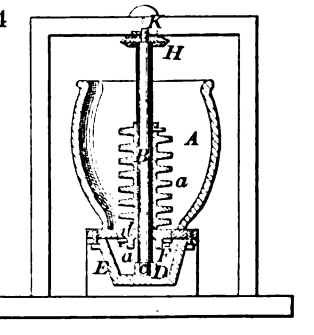

30603

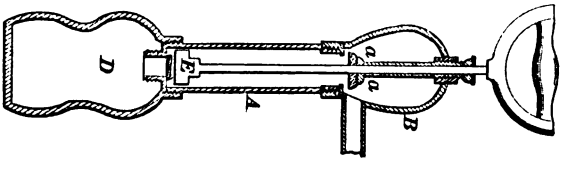

30605

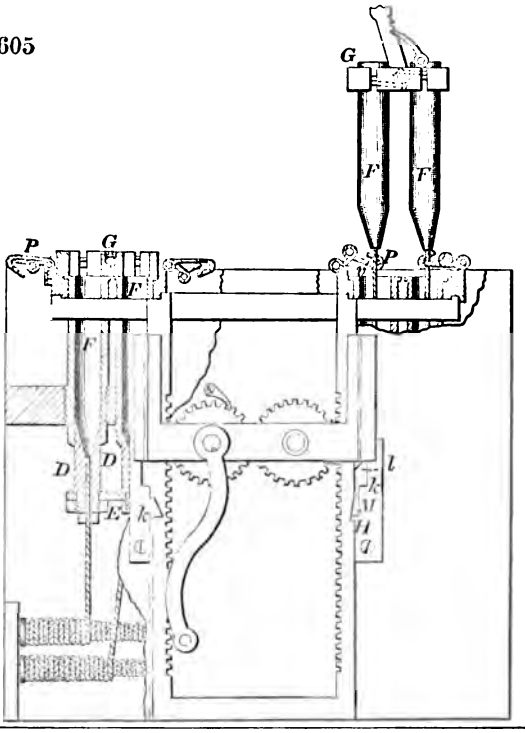

30606

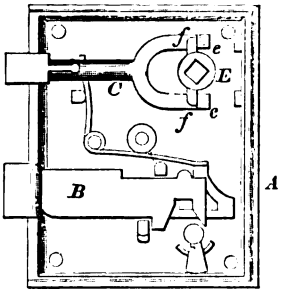

30607

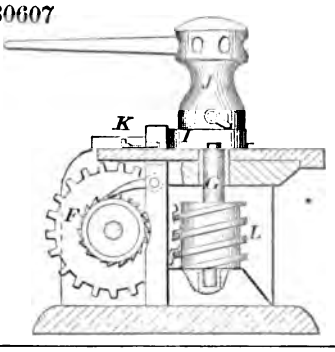

30608

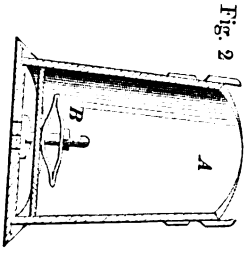

Fig. 2

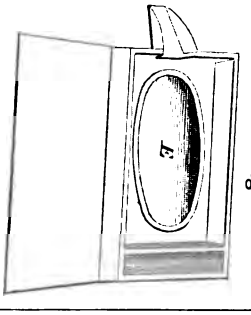

Fig. 1

30609

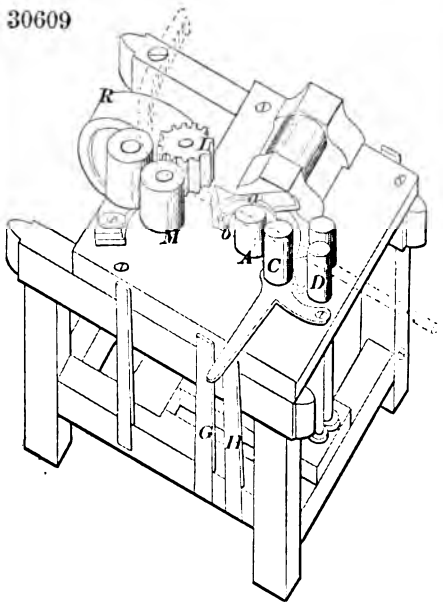

30610

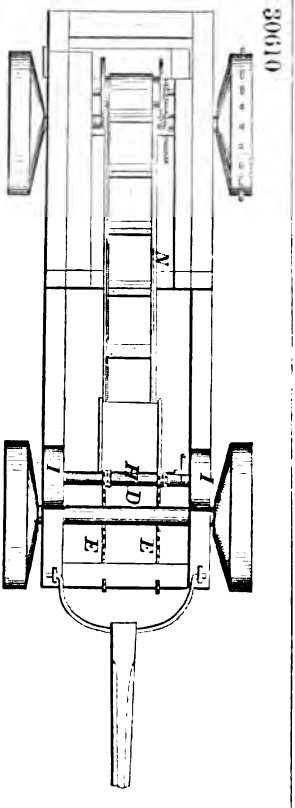

30611

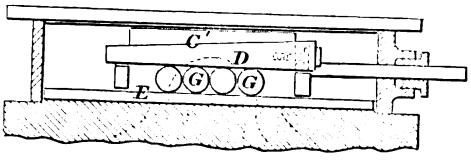

30612

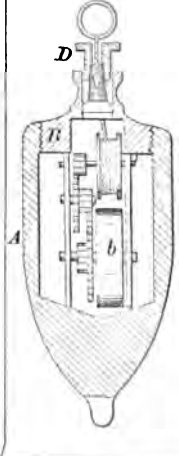

30613

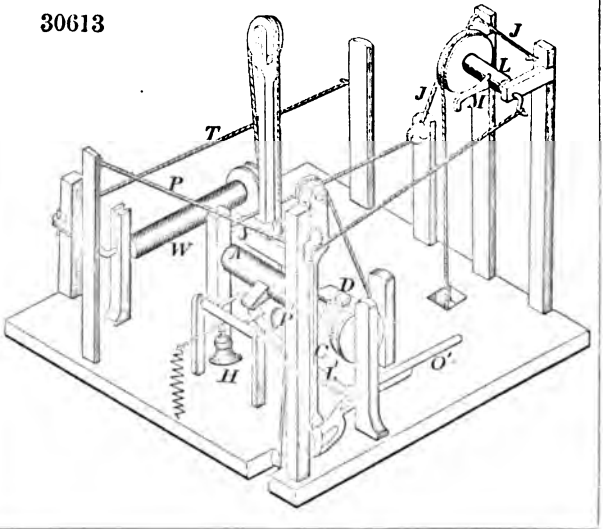

30614

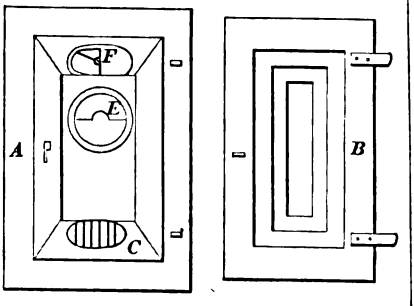

30615

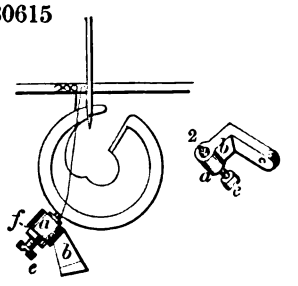

30616

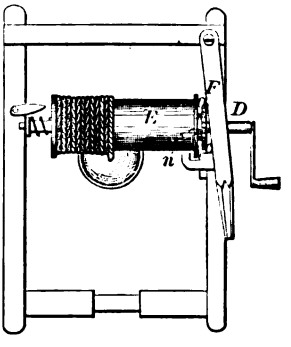

30617

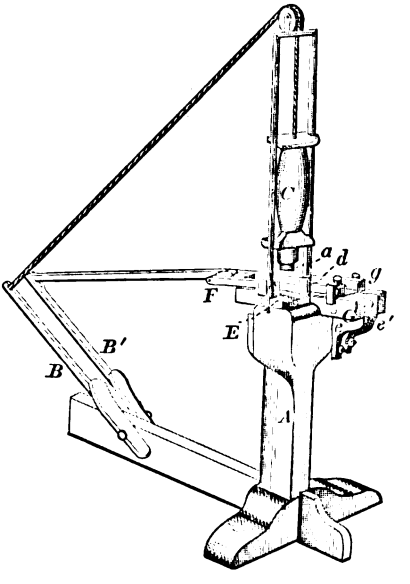

30618

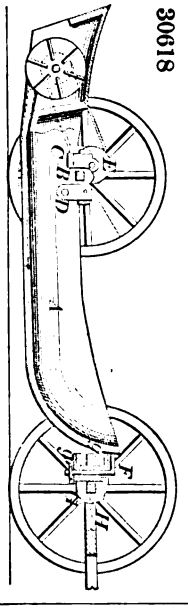

30619

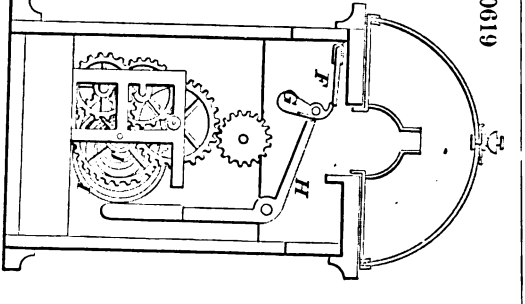

30620

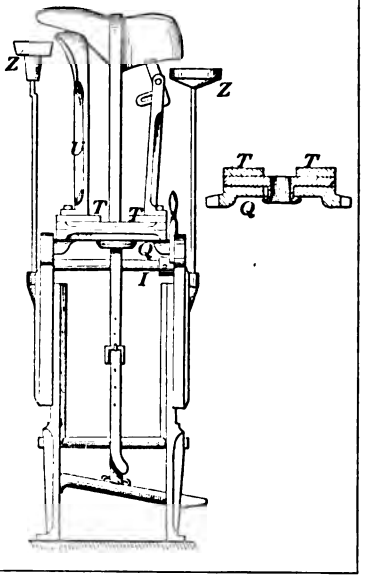

30621

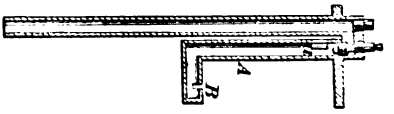

30622

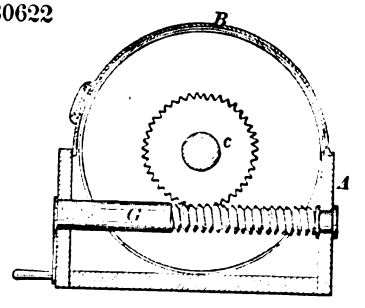

30623

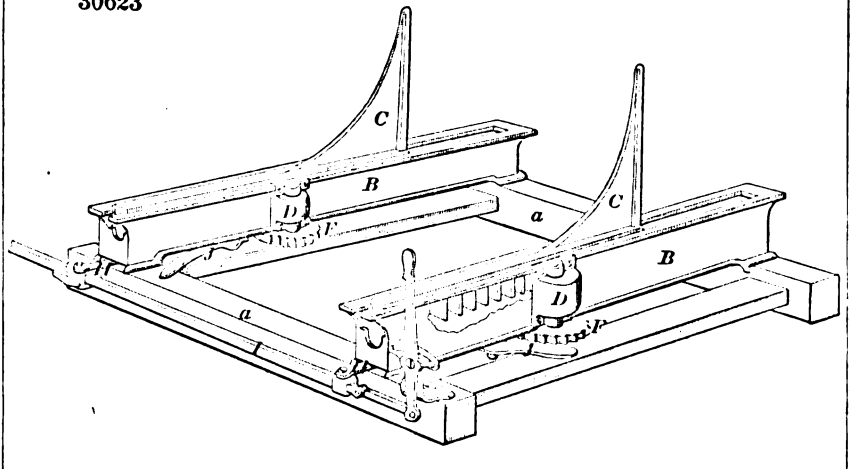

30624

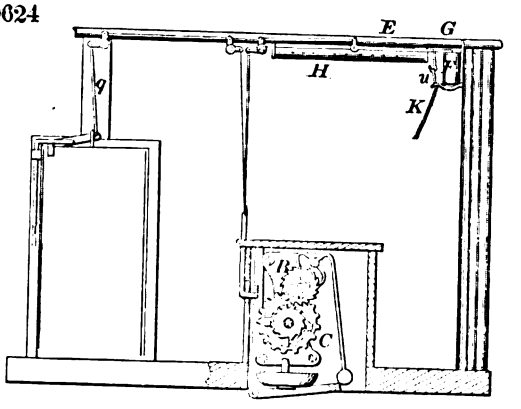

30625

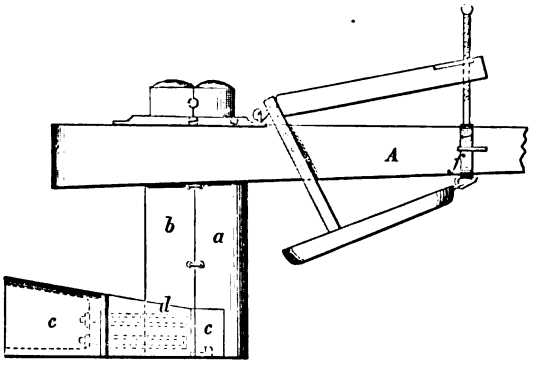

30626

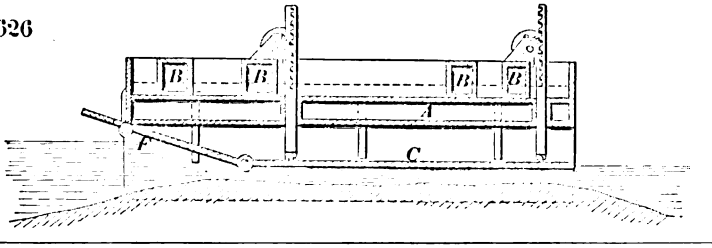

30627

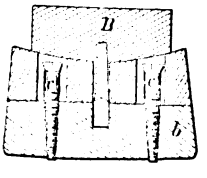

30628

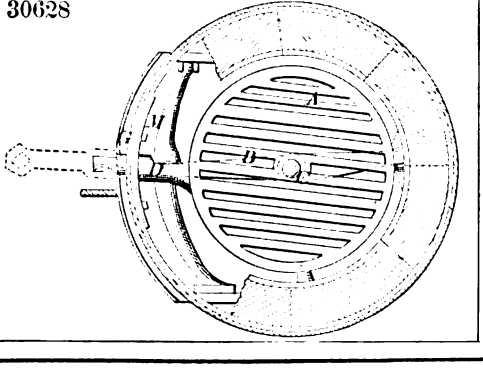

30629

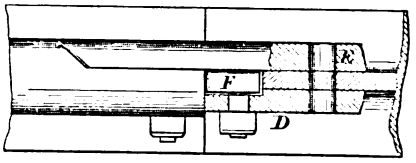

30630

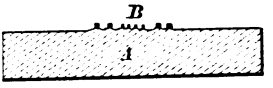

30631

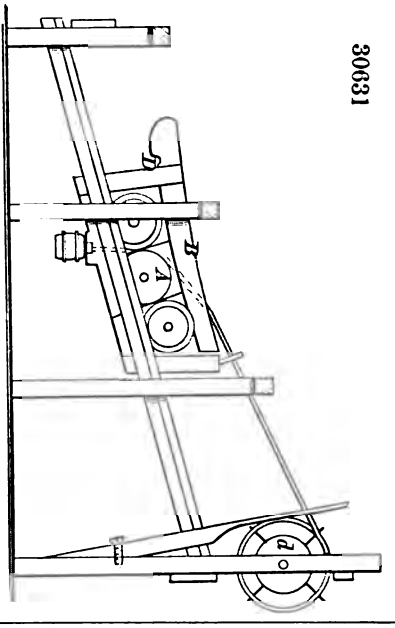

30632

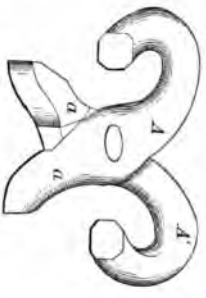

30633

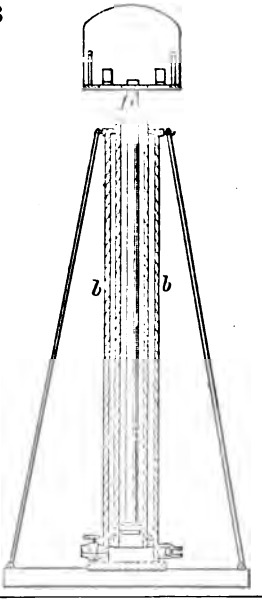

30634

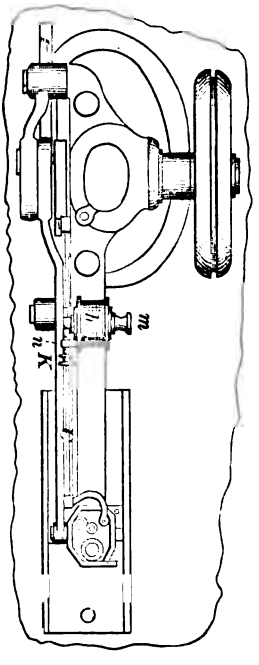

30635

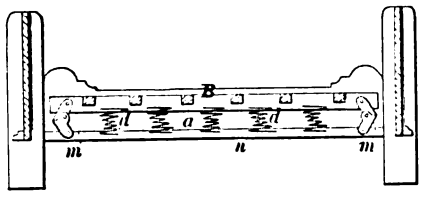

30636

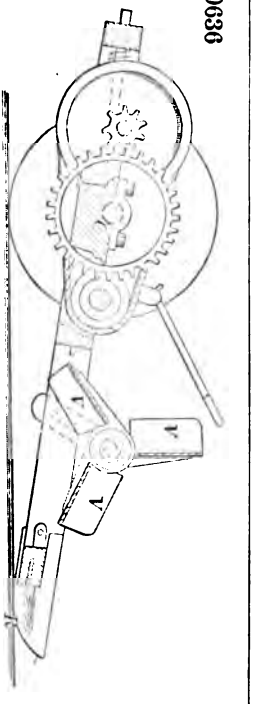

30639

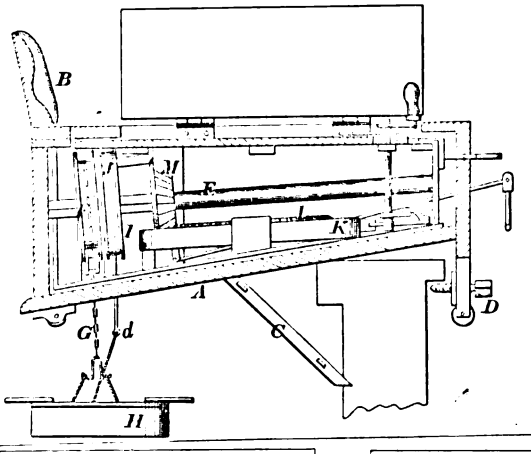

30637

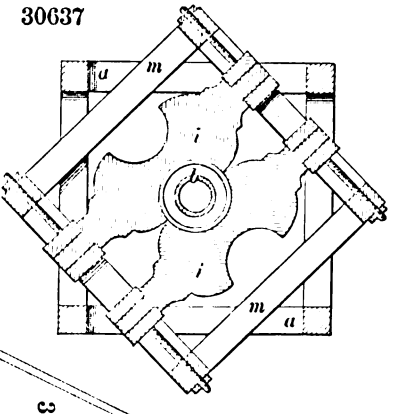

30640

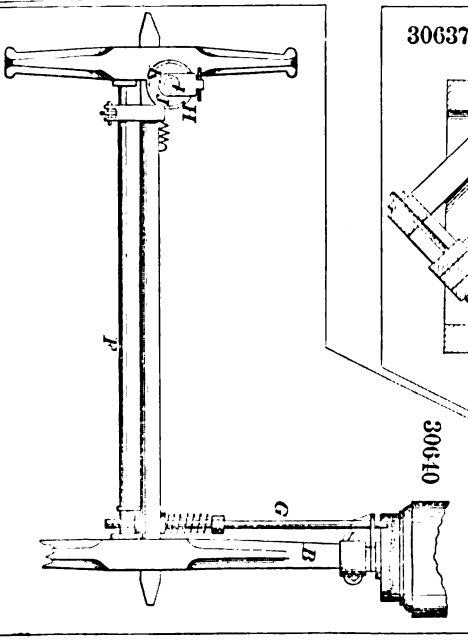

30411

30412

30643

30644

30645

30646

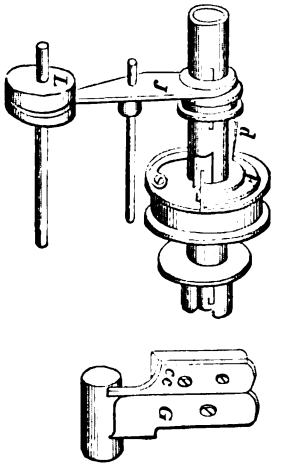

30647

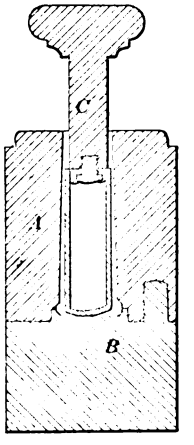

30648

Fig. 1

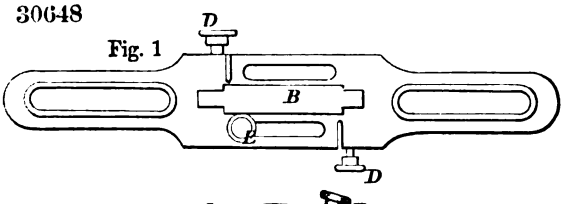

Fig. 2

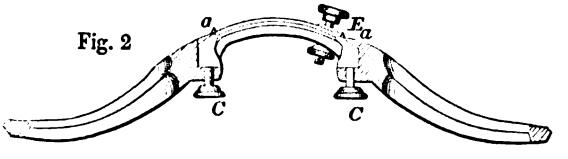

30650

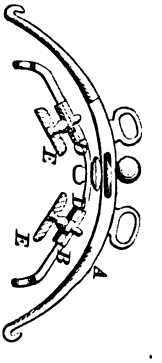

30651

Fig. 1

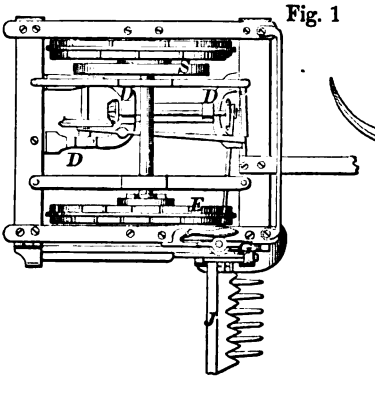

Fig. 2

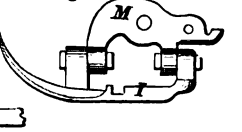

30652

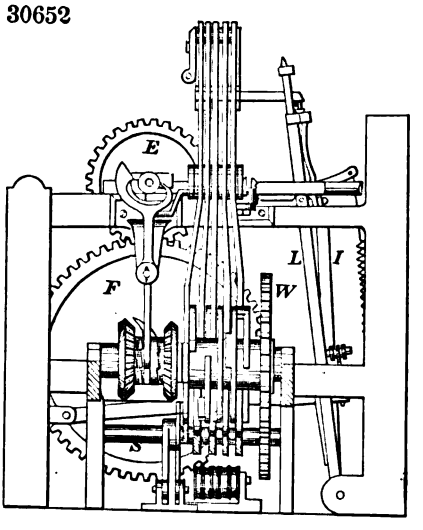

30653

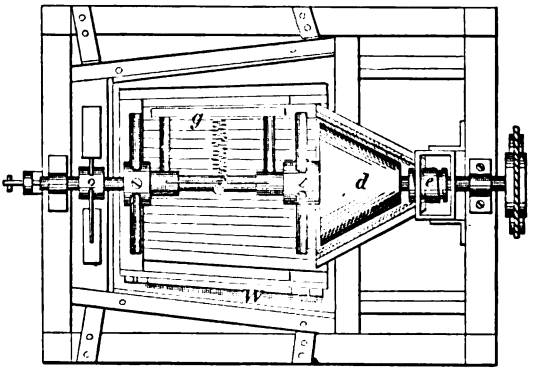

30655

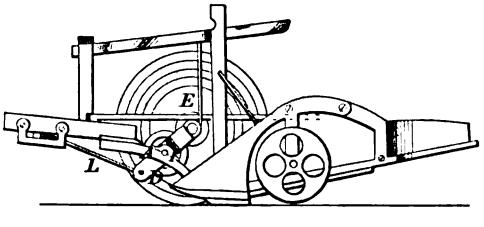

30654

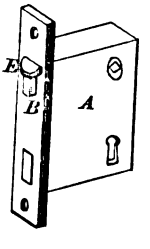

30656

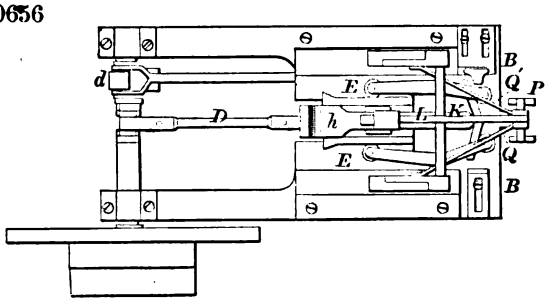

30657

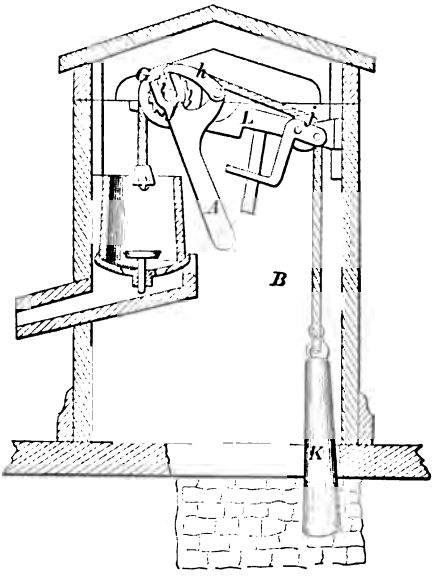

30659

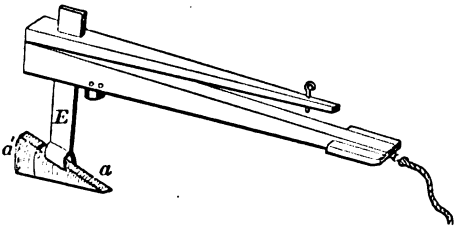

30660

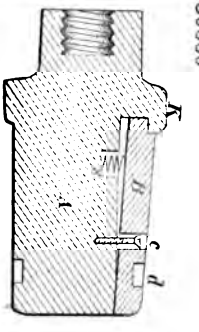

30661

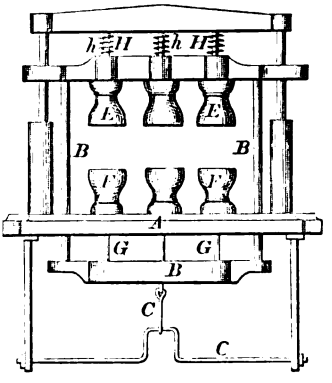

30662

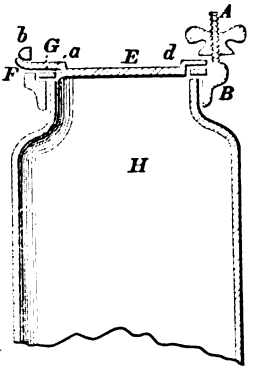

30664

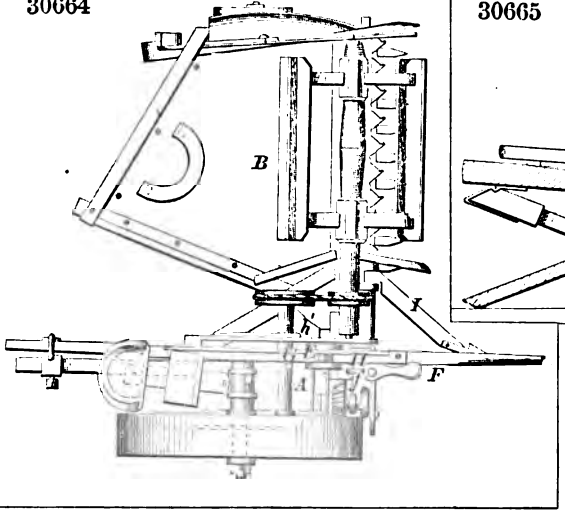

30665

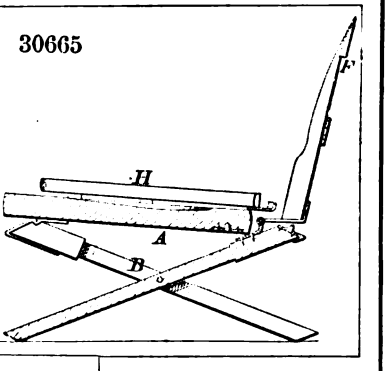

30666

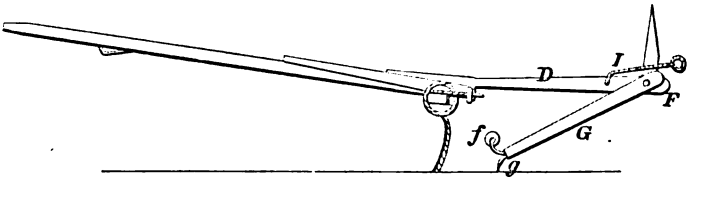

30667

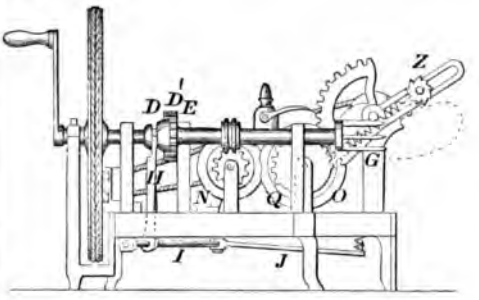

30668

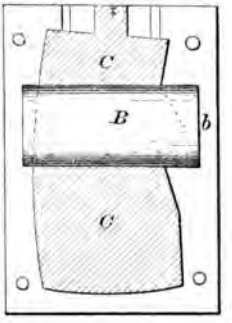

30670

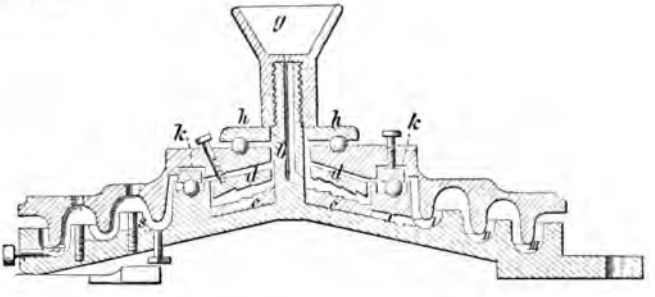

30669

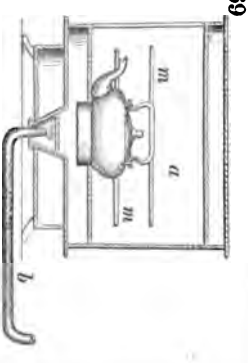

30671

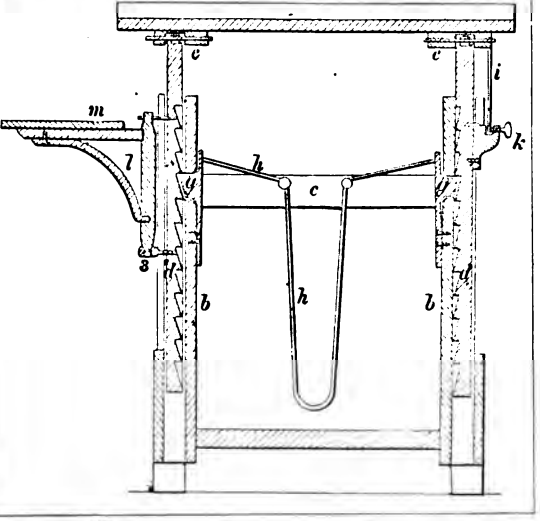

30672

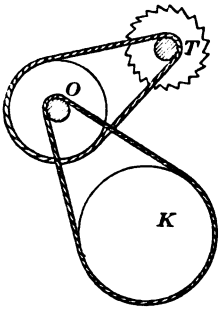

30673

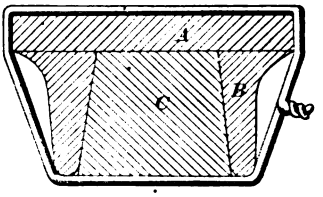

30674

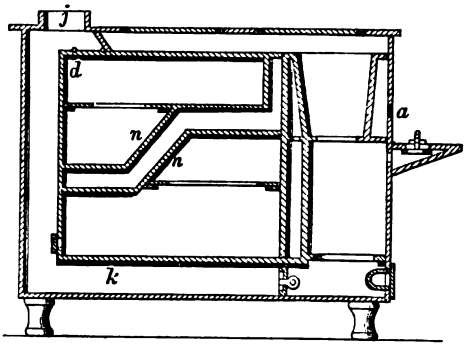

30675

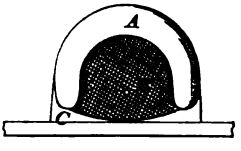

30676

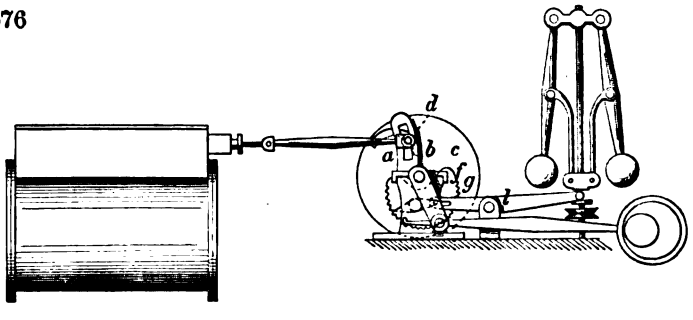

30677

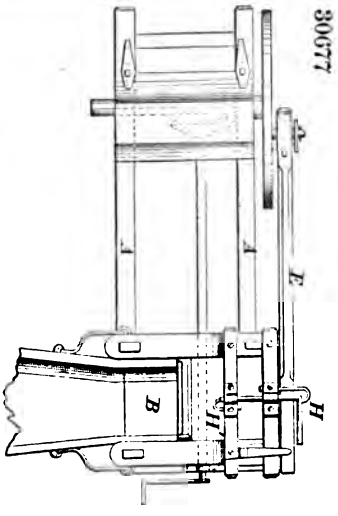

30678

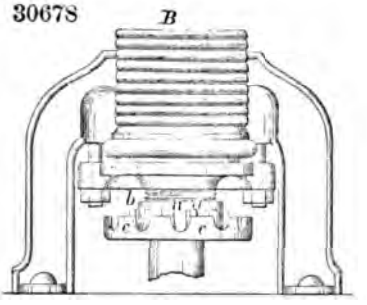

30679

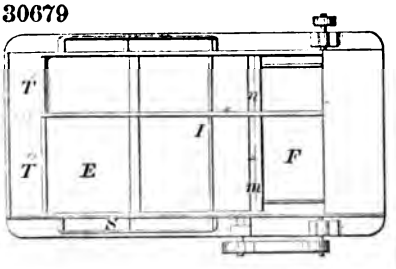

30681

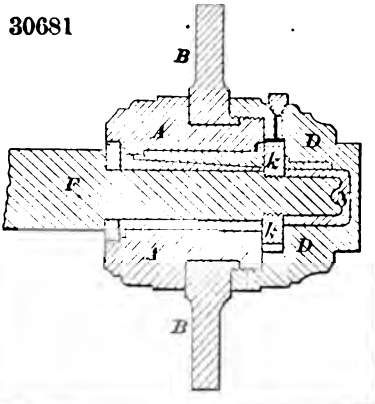

30682

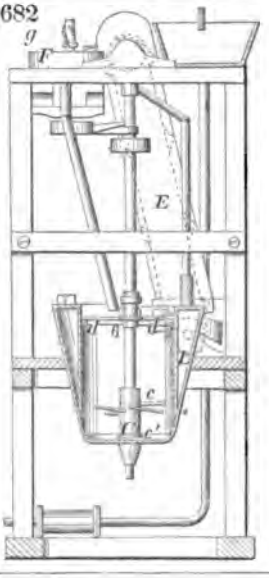

30683

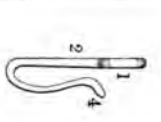

30685

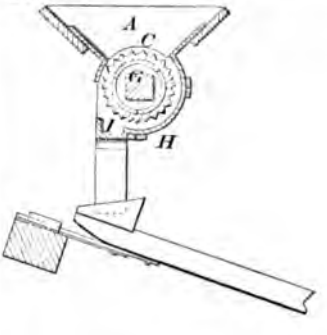

30686

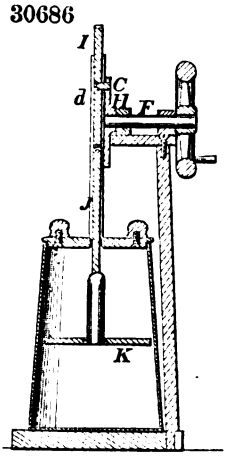

30687

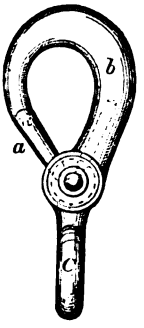

30688

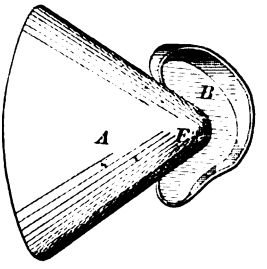

30689

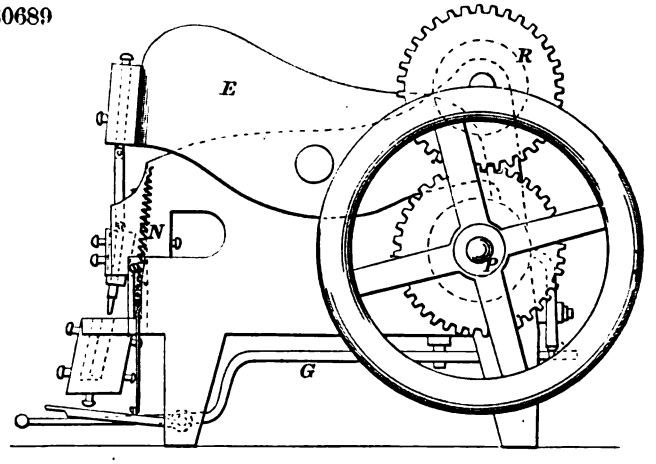

30690

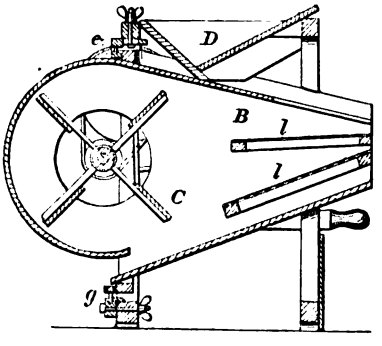

30691

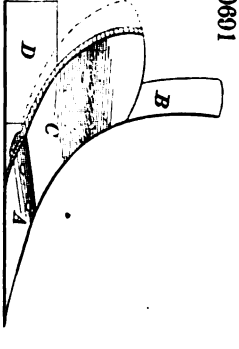

30693

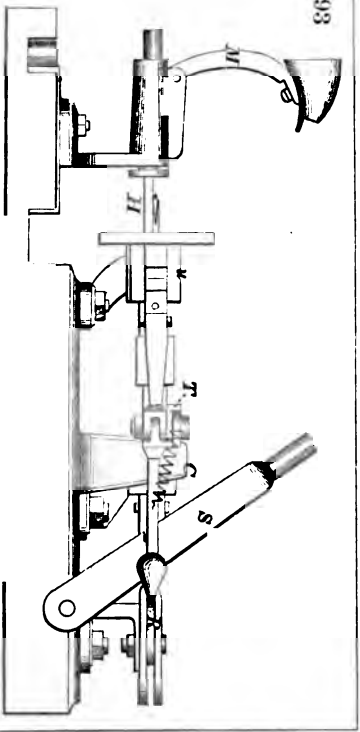

30692

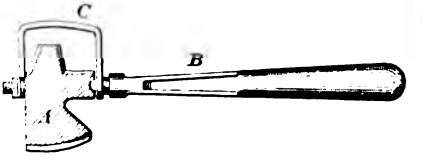

30694

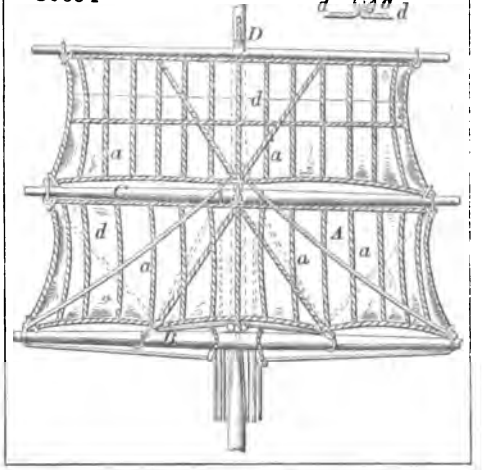

30696

30695

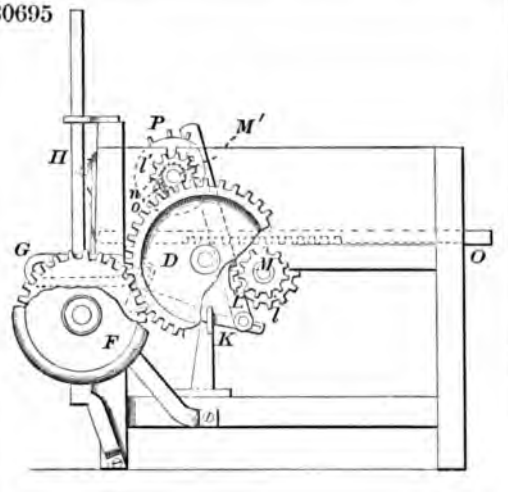

30697

Fig 1

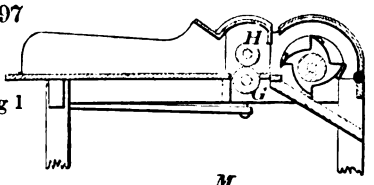

Fig. 2

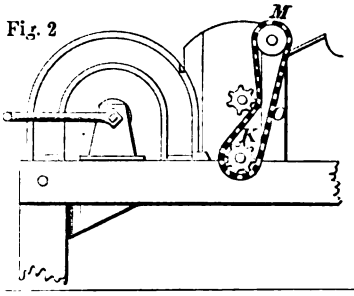

30698

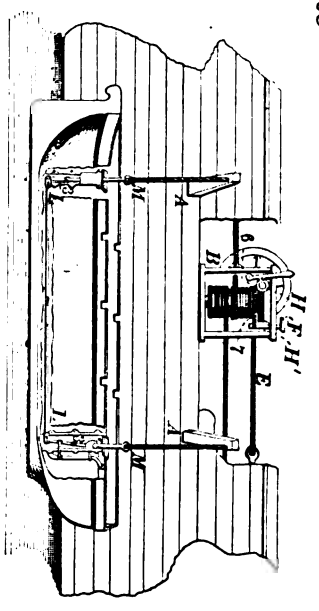

30700

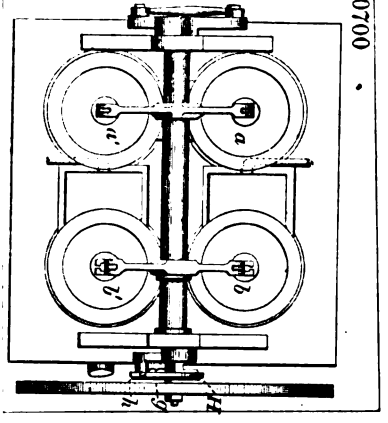

30701

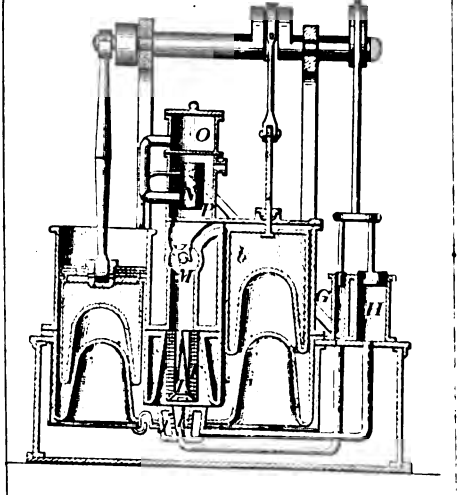

30702

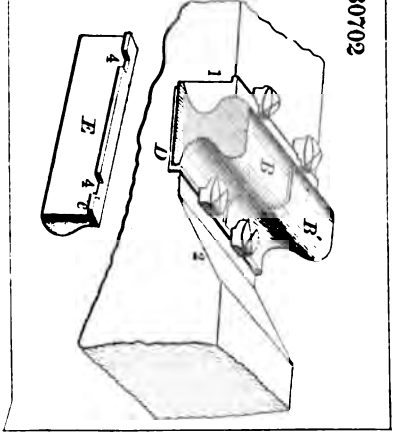

30703

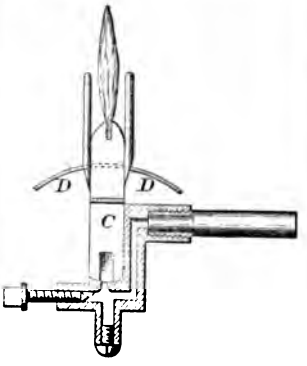

30704

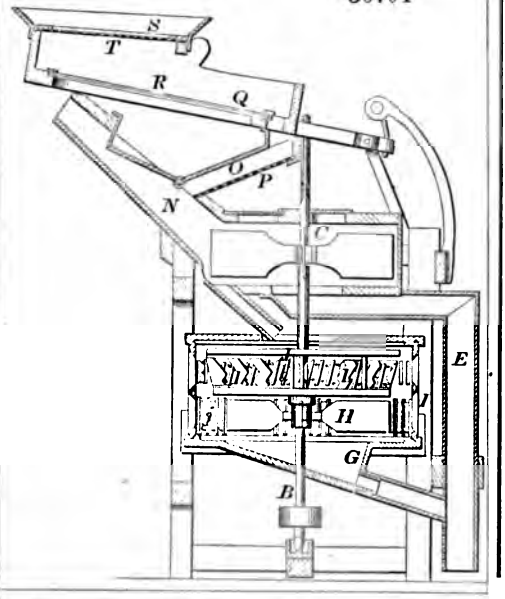

30705

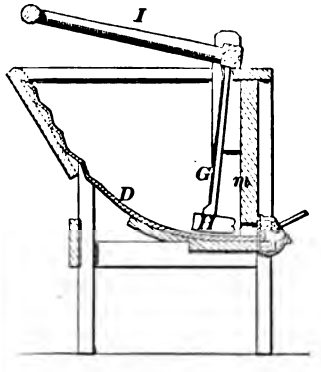

30706

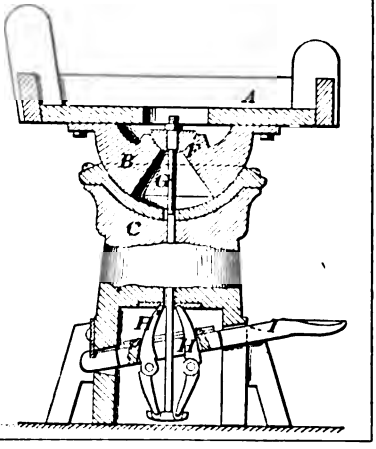

30707

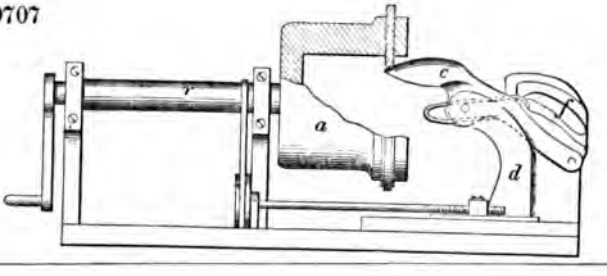

30708

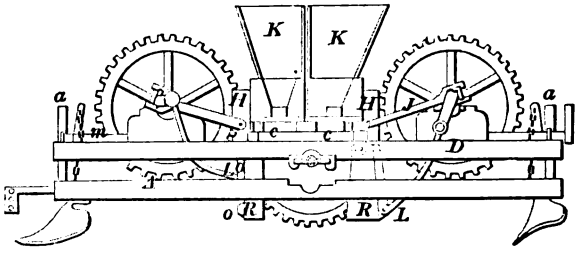

30710

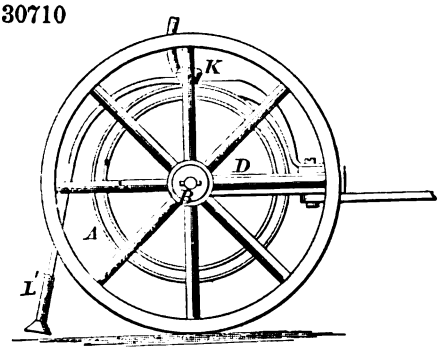

30709

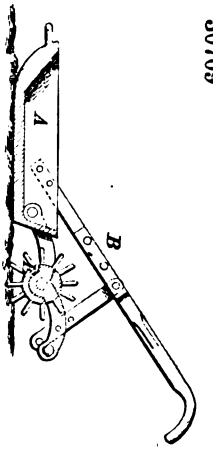

30711

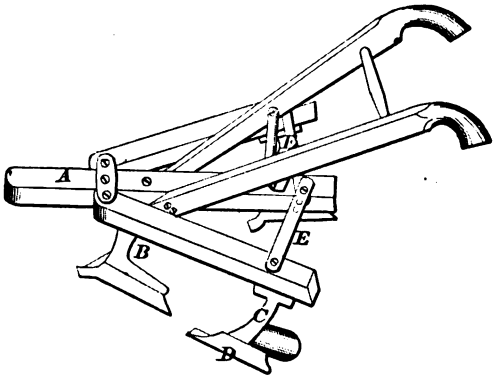

30712

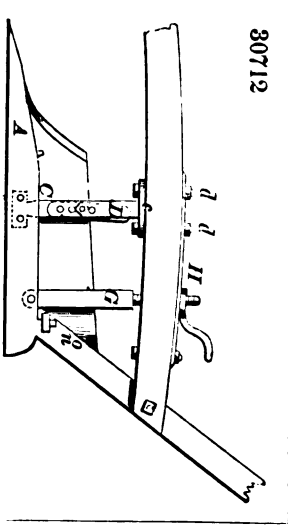

30717

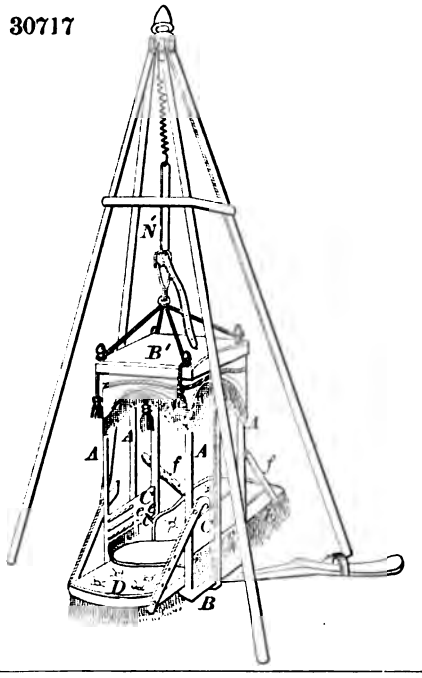

30713

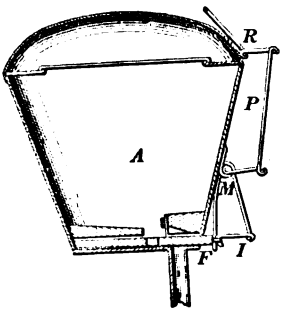

30715

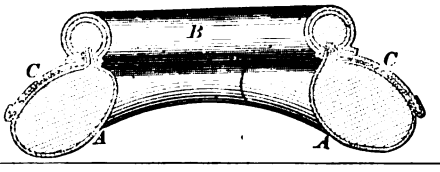

30714

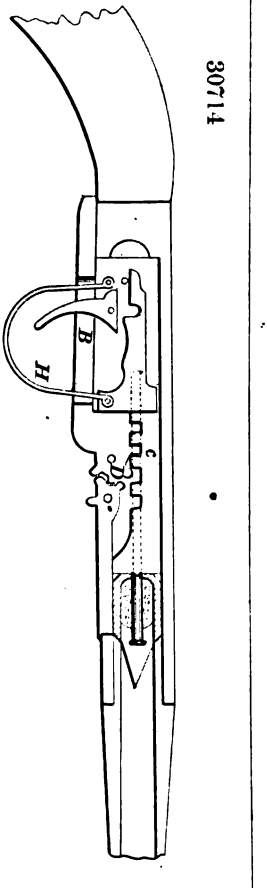

30716

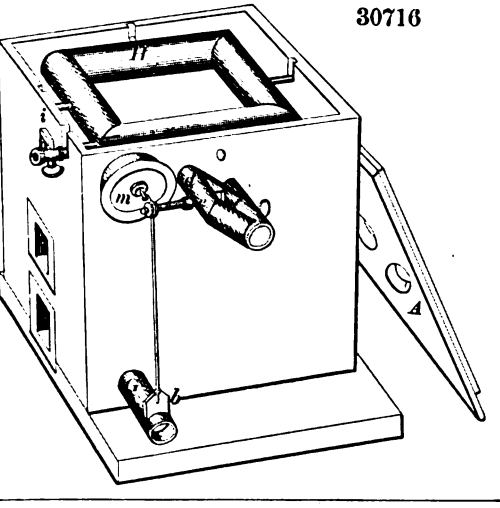

30718

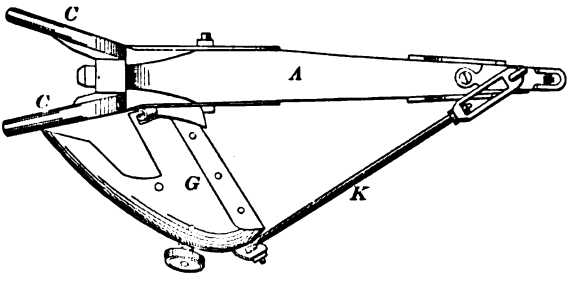

30719

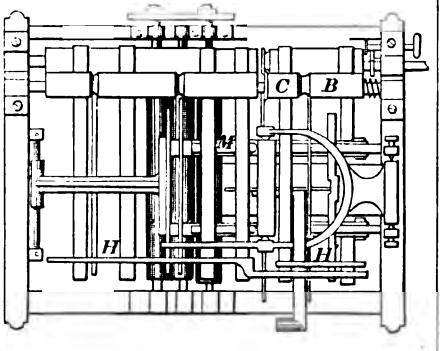

30720

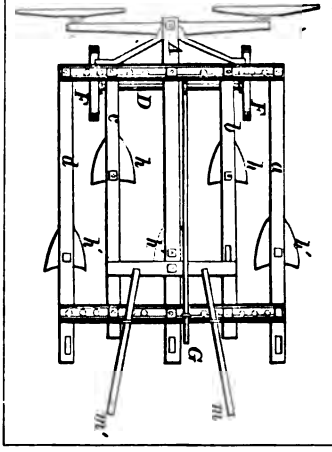

30721

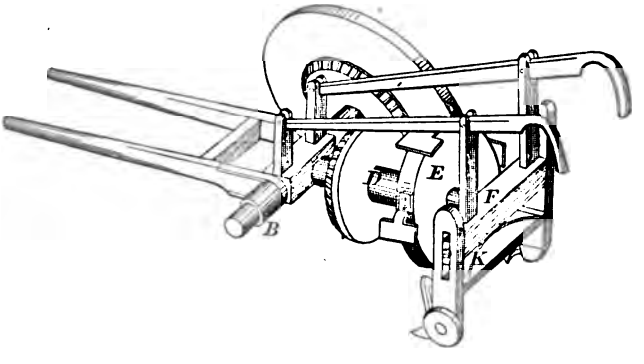

30722

30723

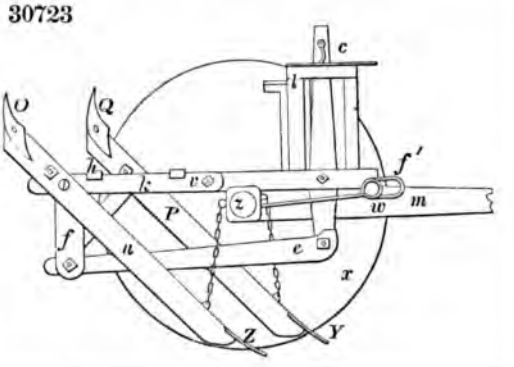

30724

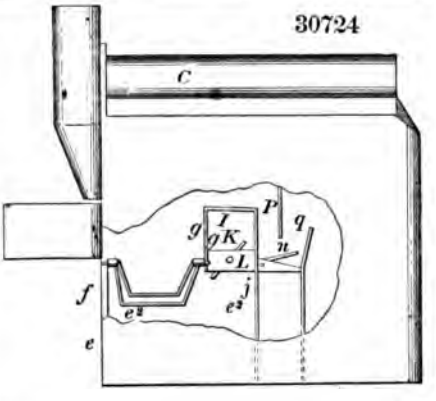

30726

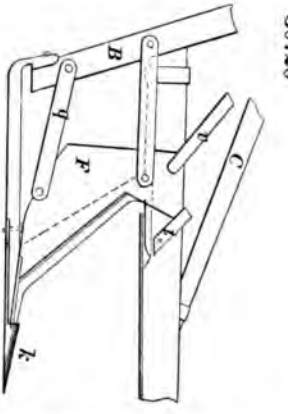

30725

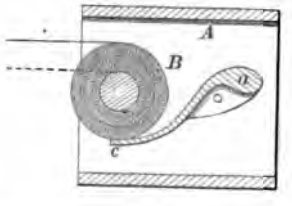

30727

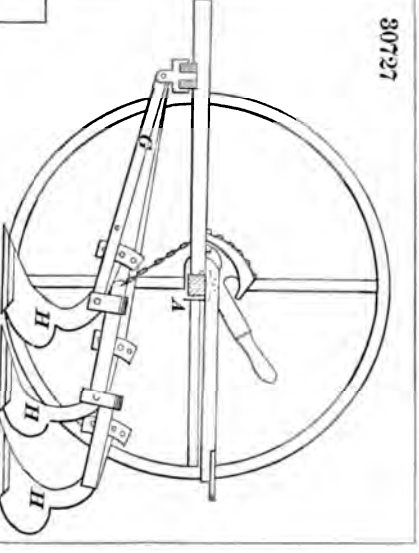

30728

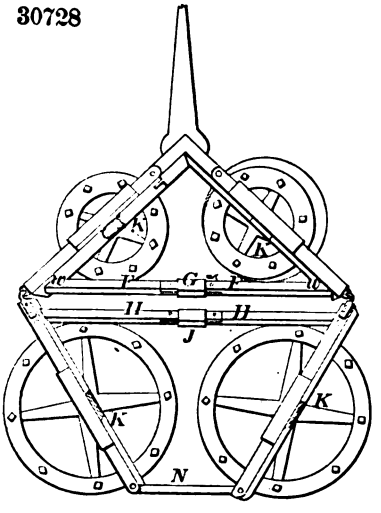

30729

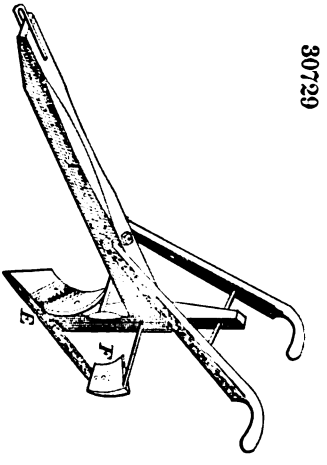

30730

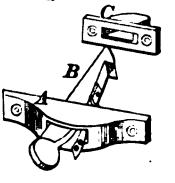

30731

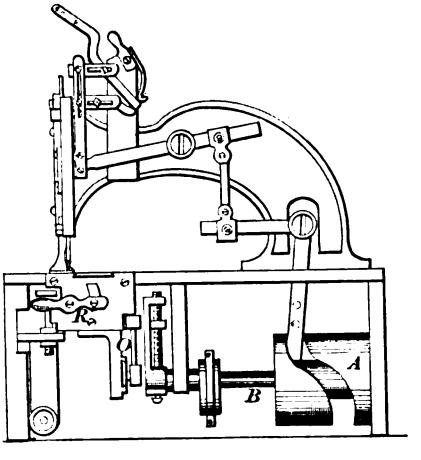

30732

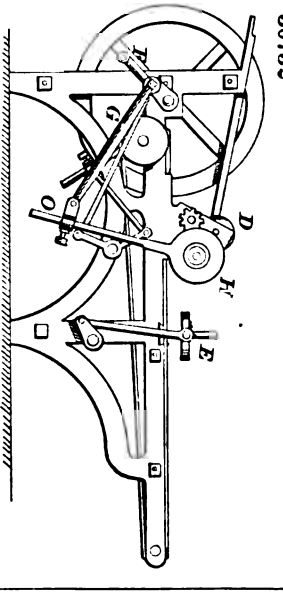

30733

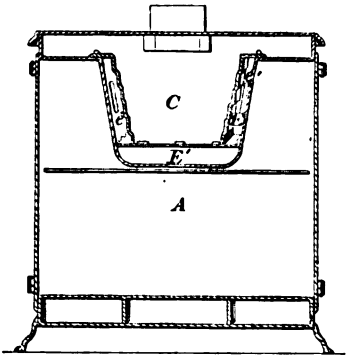

30734

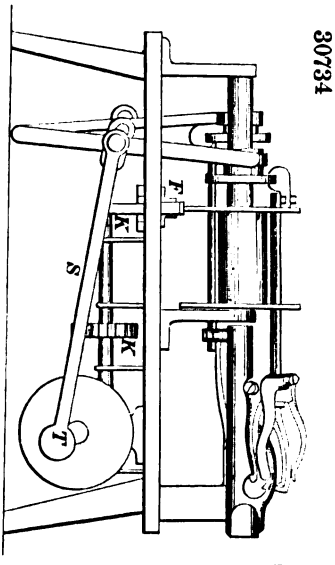

30735

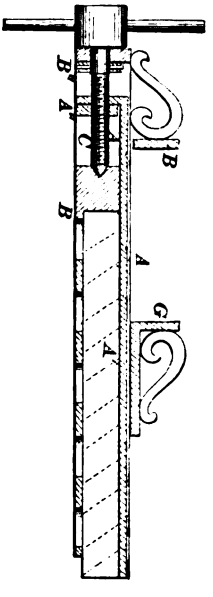

30736

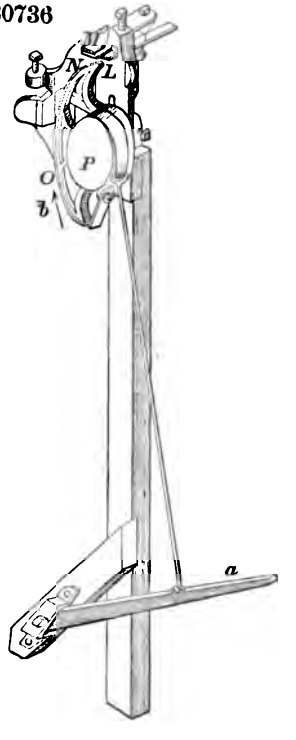

30737

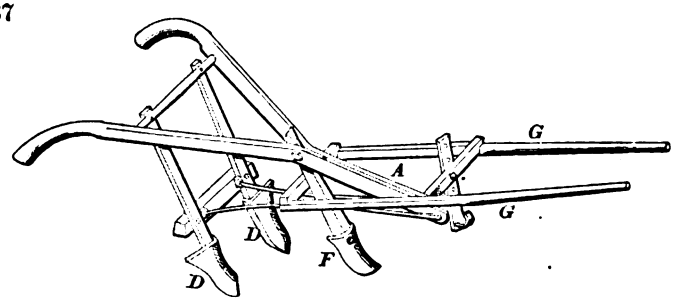

30738

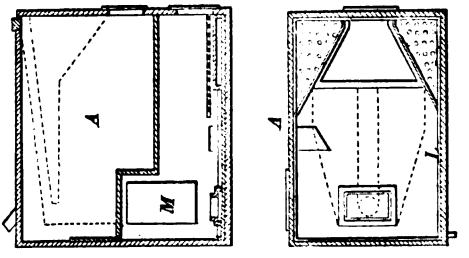

30739

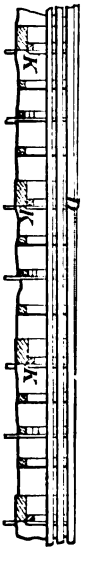

30740

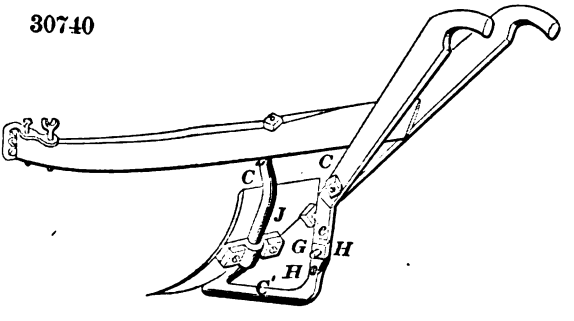

30741

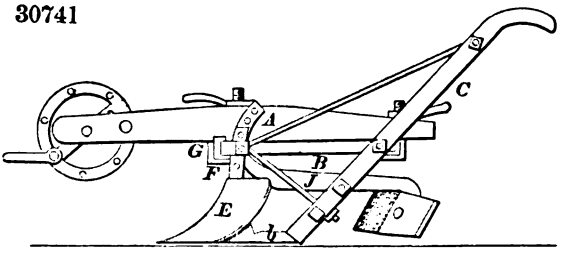

30742

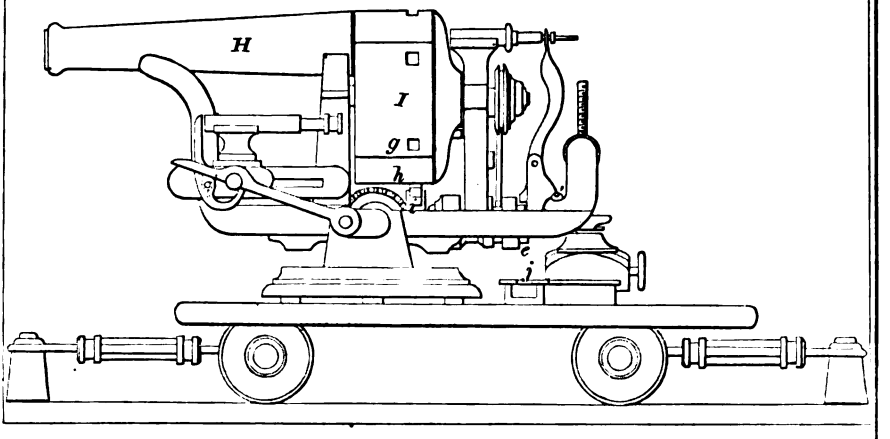

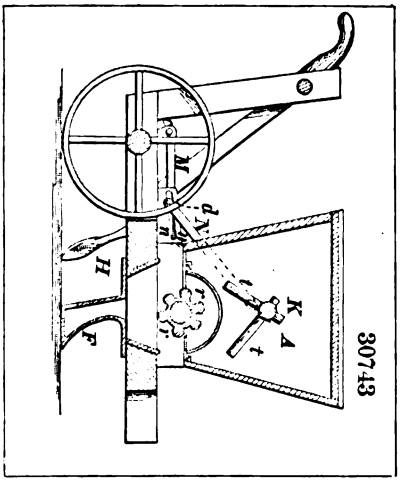

30743

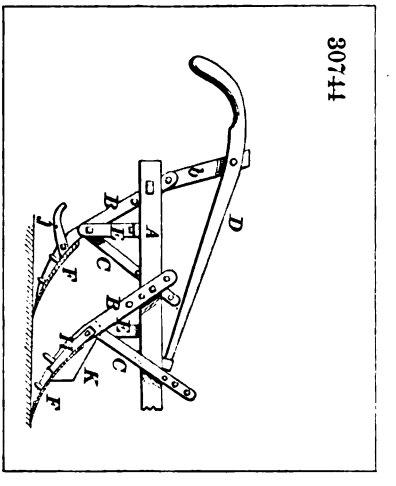

30744

30745

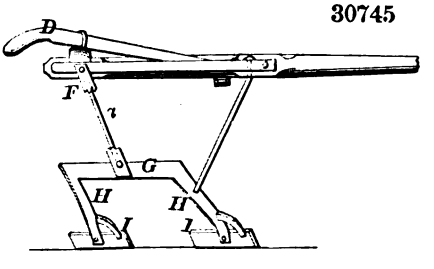

30746

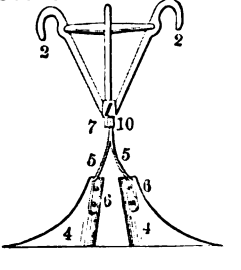

30747

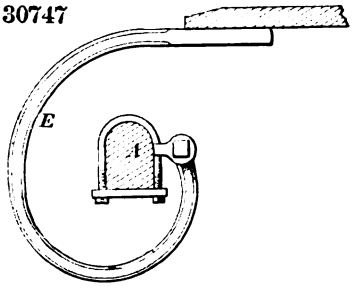

30748

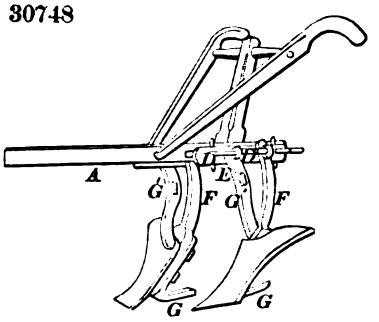

30750

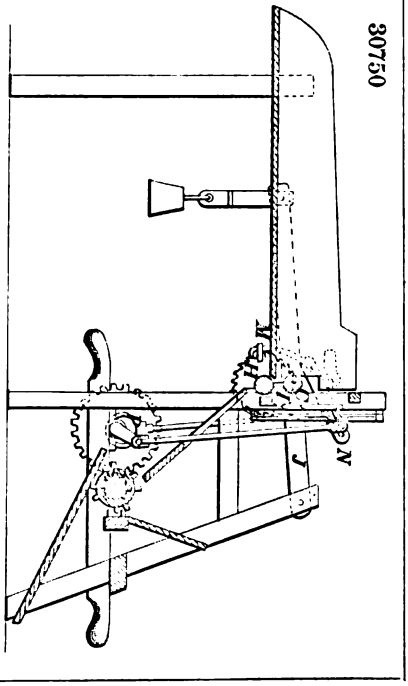

30749

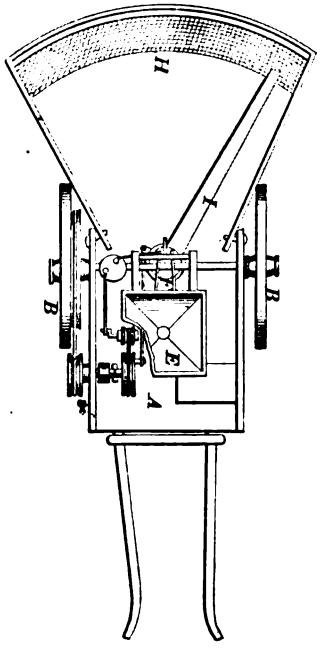

30751

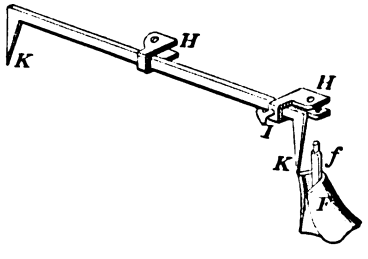

30752

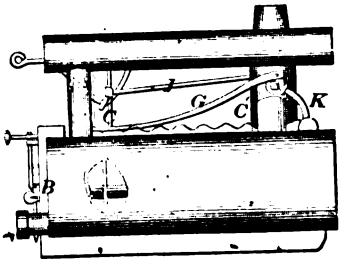

30753

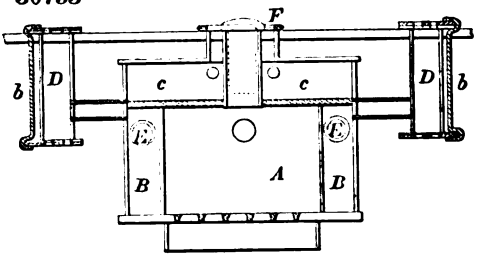

30754

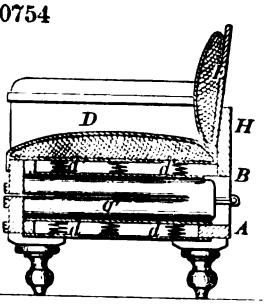

30755

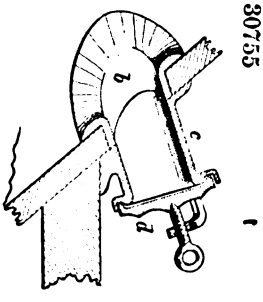

30756

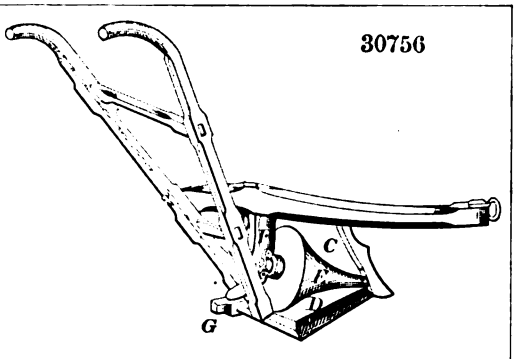

30758

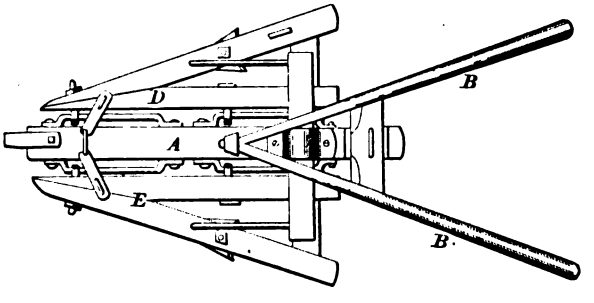

30757

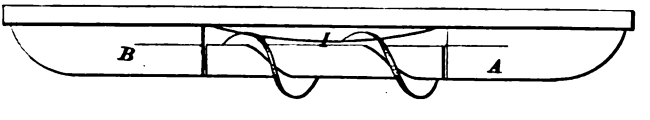

30759

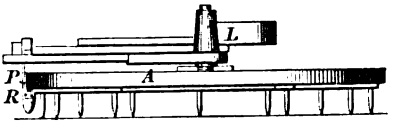

30760

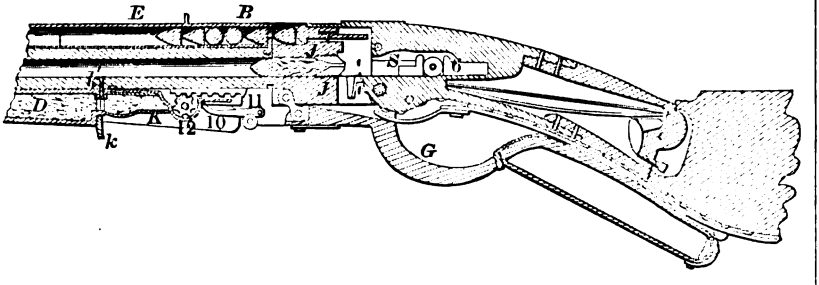

30761

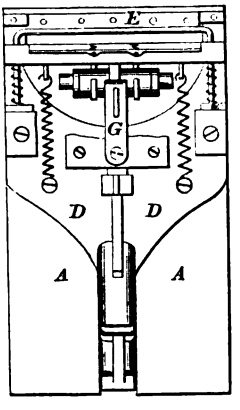

30762

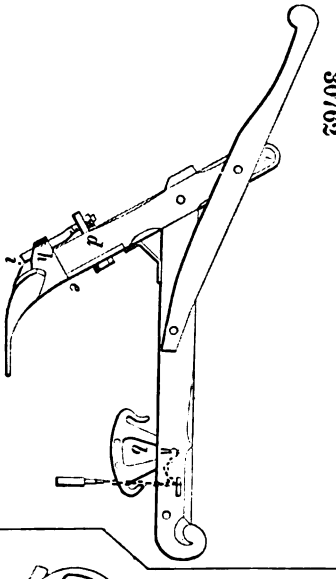

30763

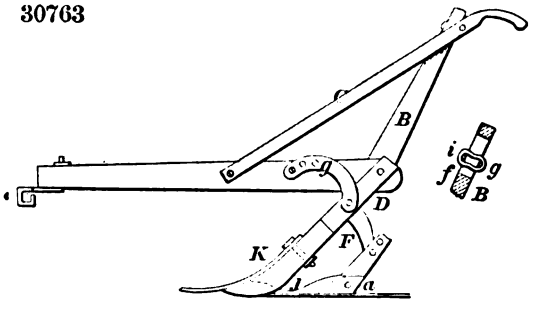

30764

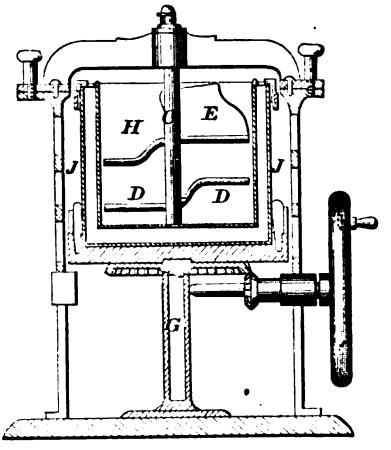

30765

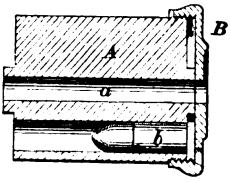

30766

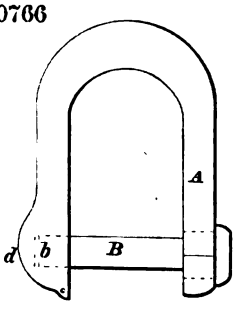

30767

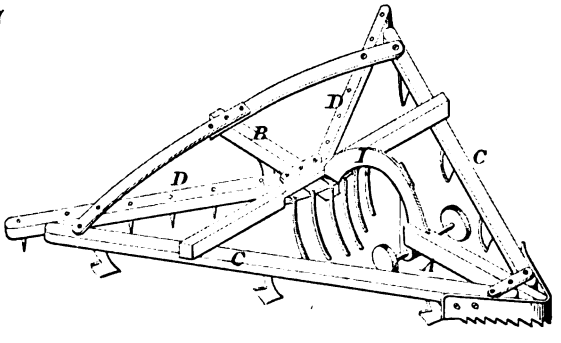

30768

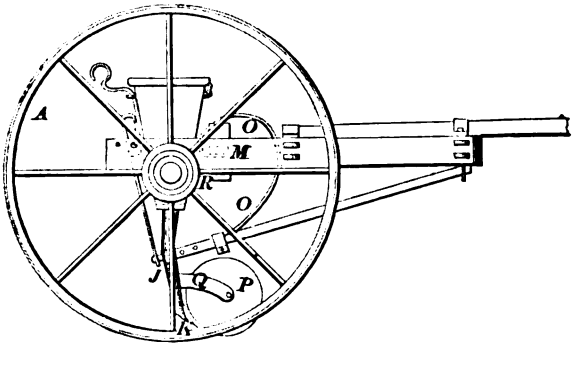

30769

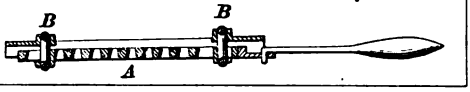

30770

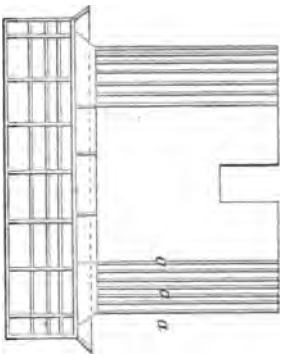

30771

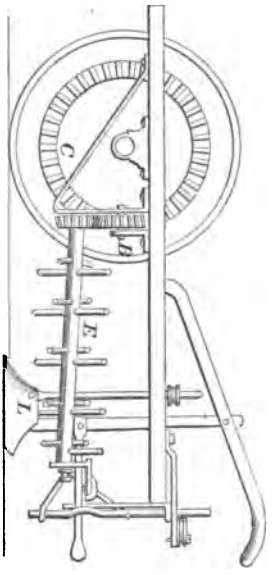

30772

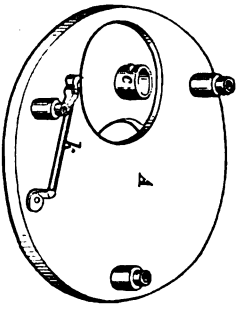

30773

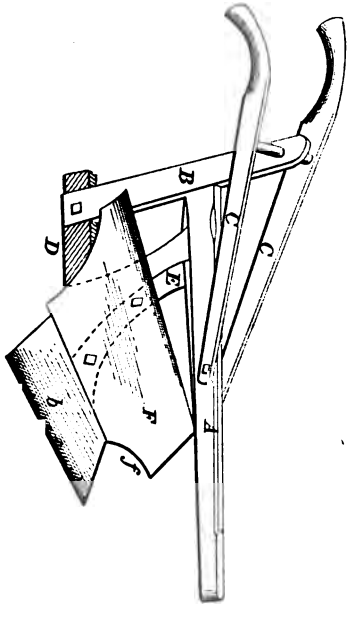

30774

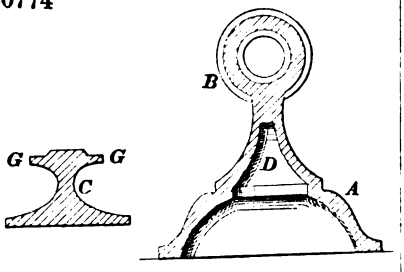

30778

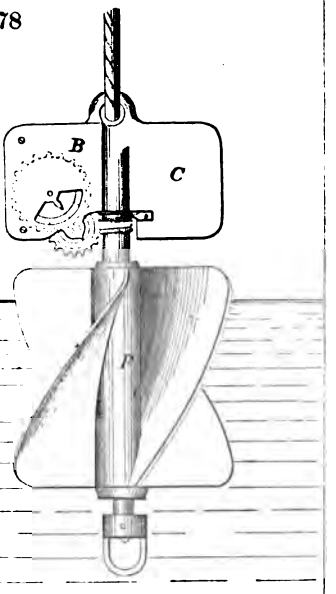

30776

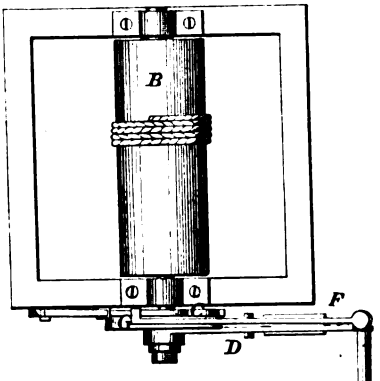

30775

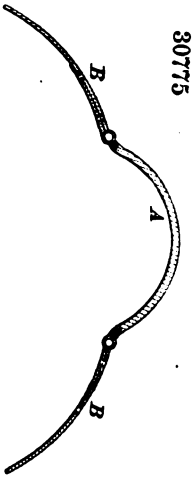

30777

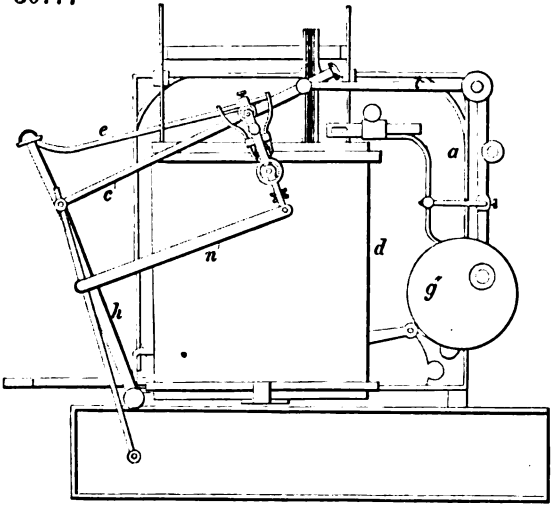

30779

Fig. 1

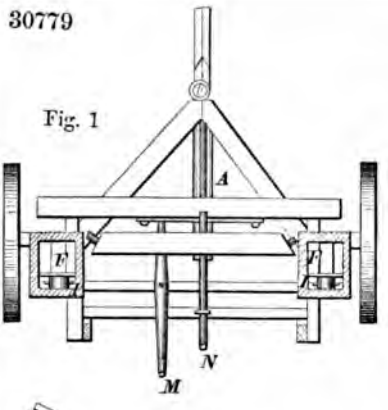

Fig. 2

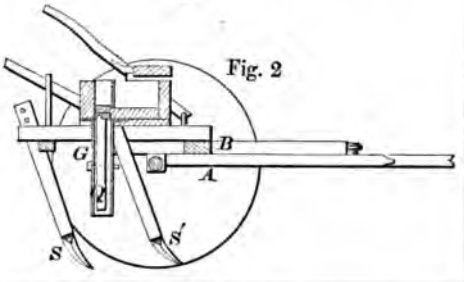

30780

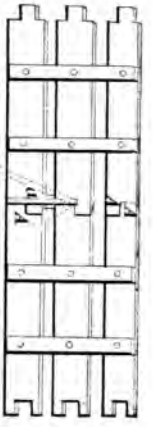

30782

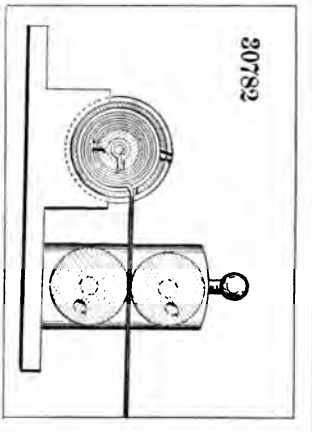

30781

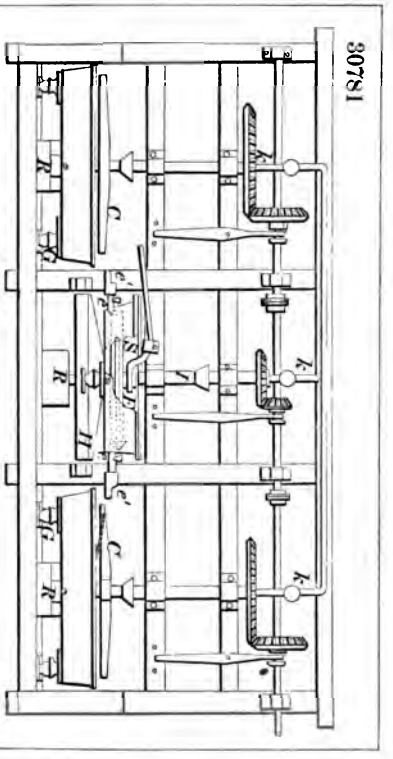

30783

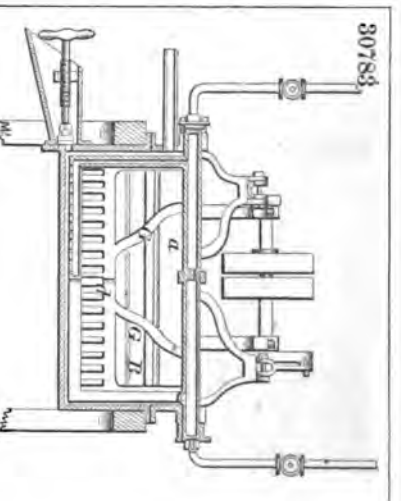

30784

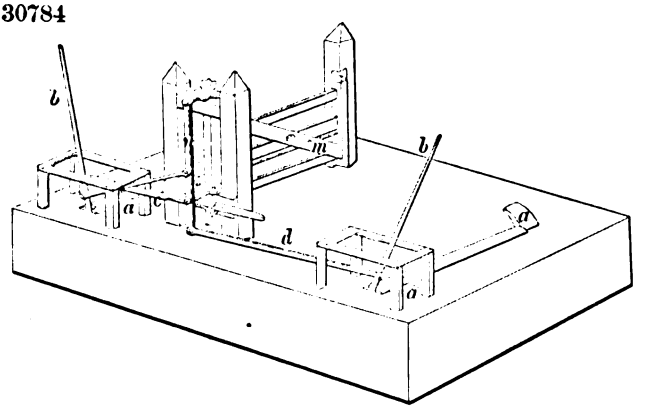

30785

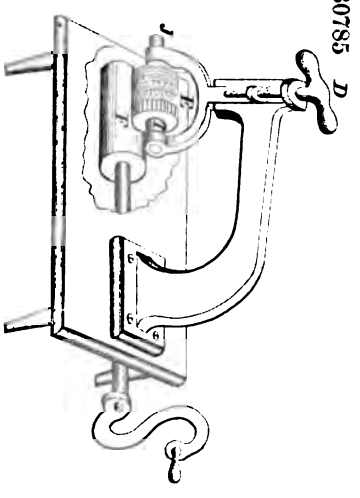

30786

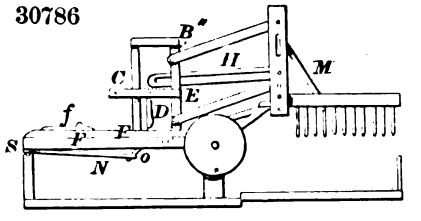

30789

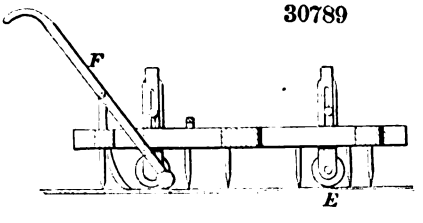

30787

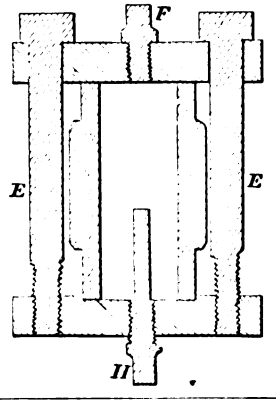

30788

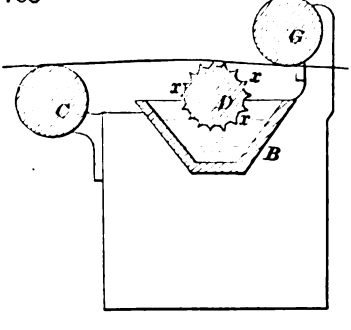

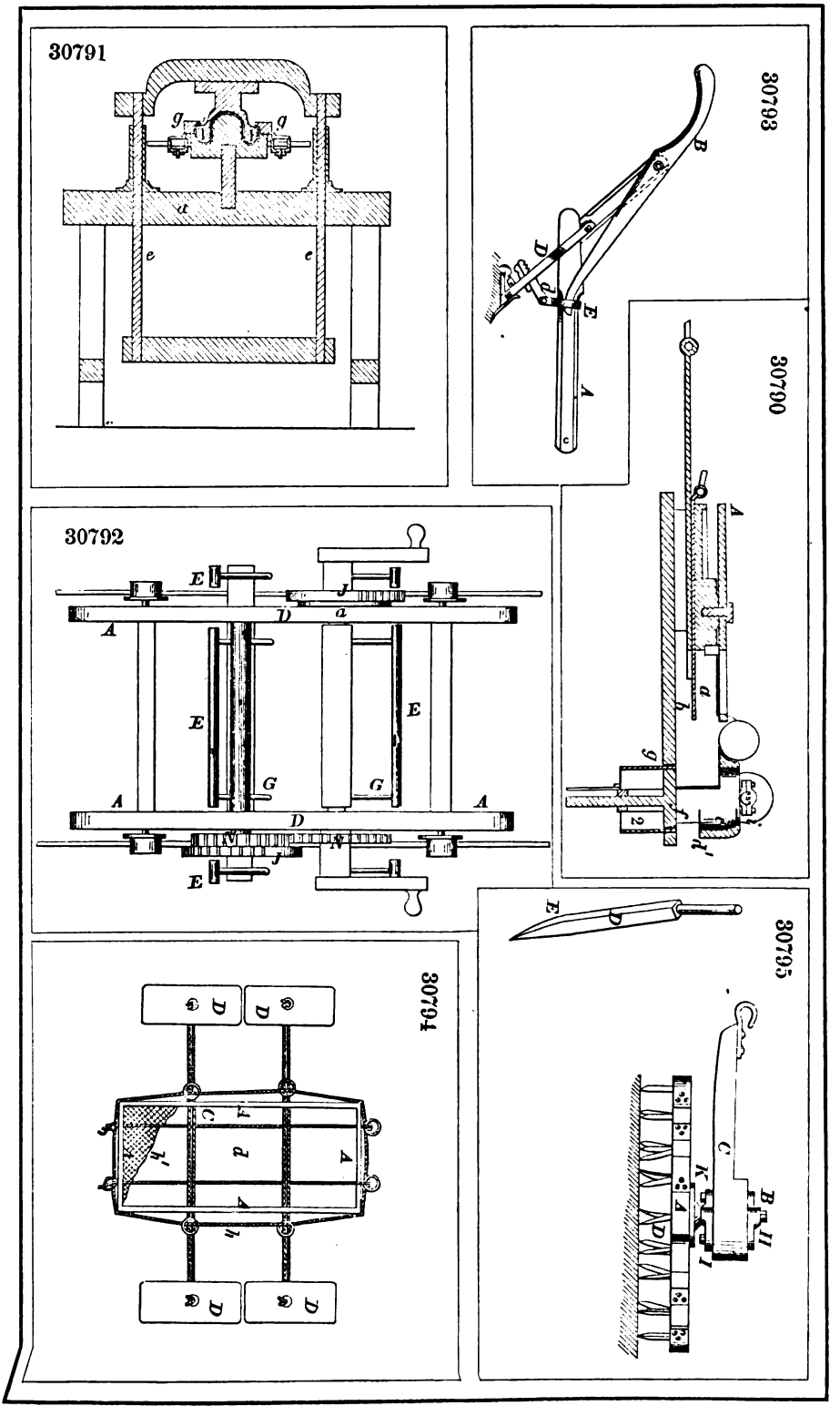
30791
30793
30790
30792
30795
30794

30796

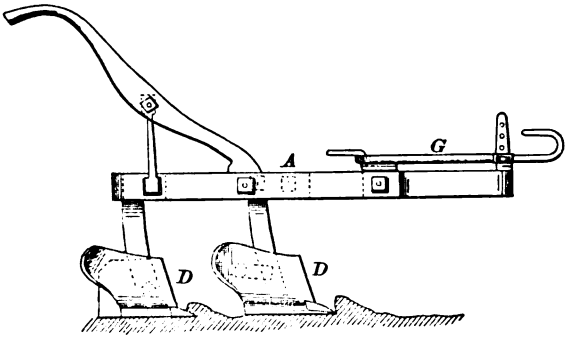

30797

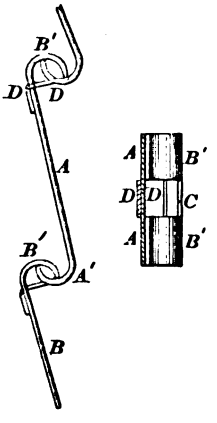

30798

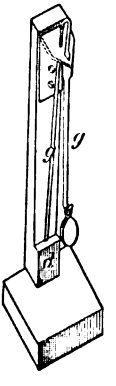

30799

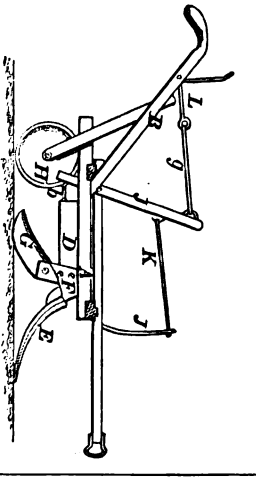

30800

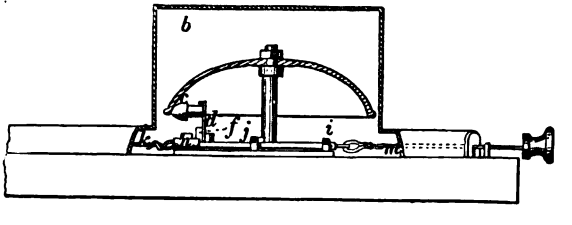

30801

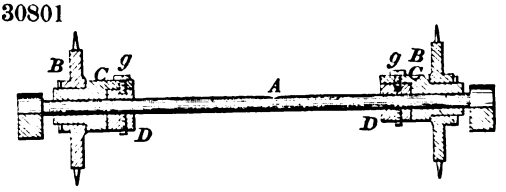

30803

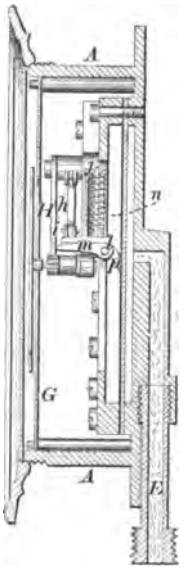

30802

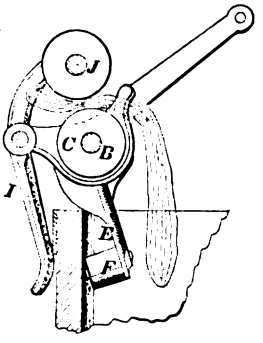

30805

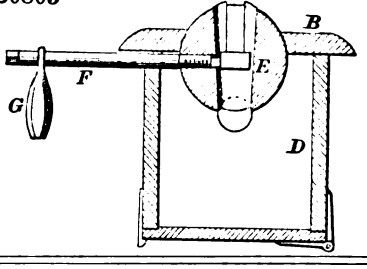

30804

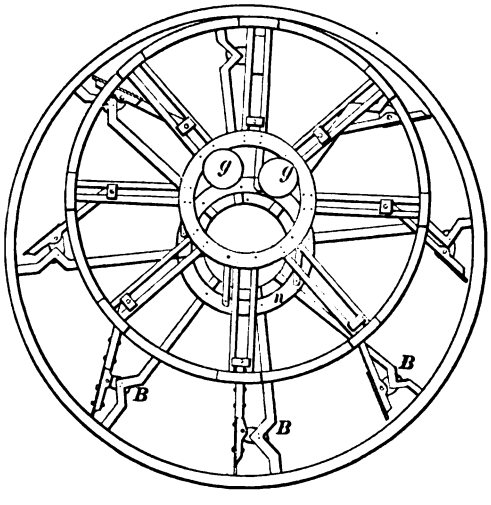

30806

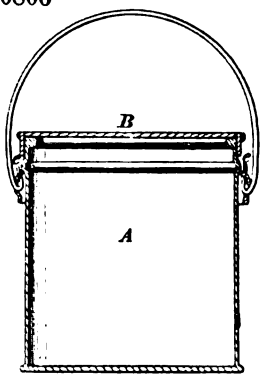

30809

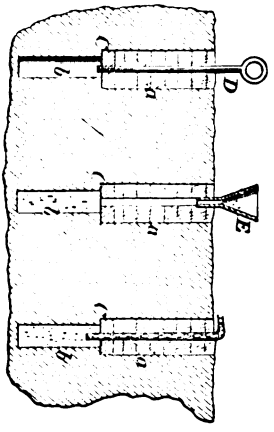

30808

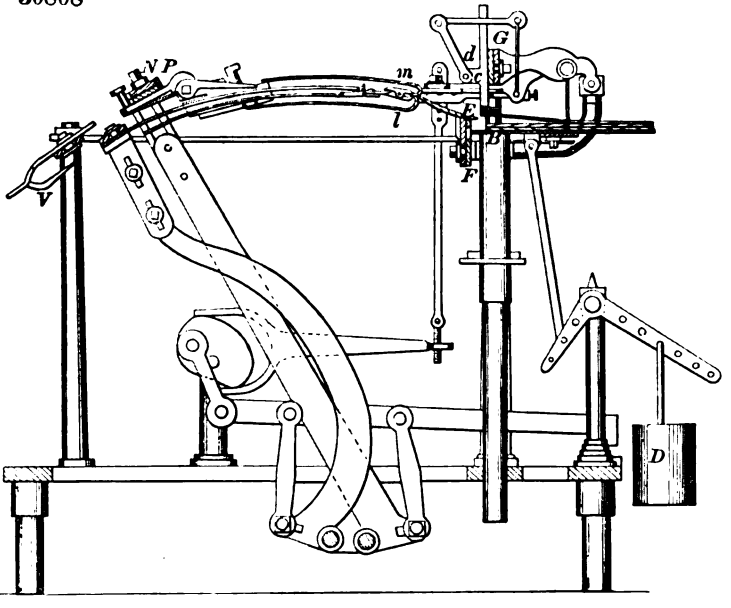

30810

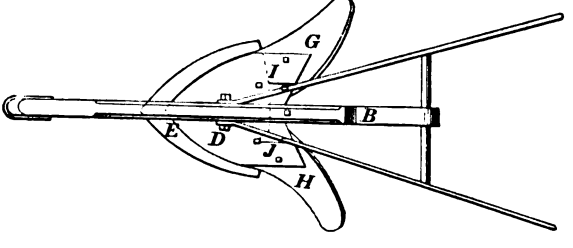

30811

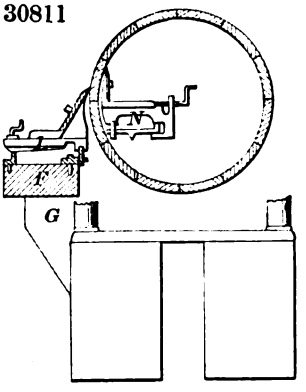

30812

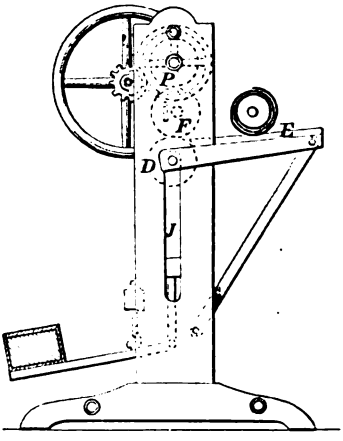

30814

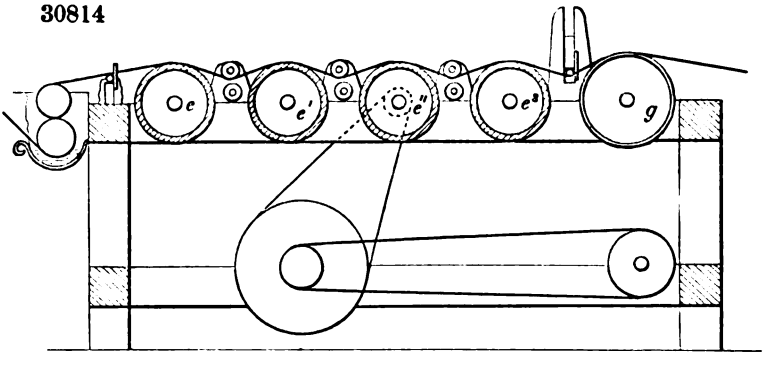

30813

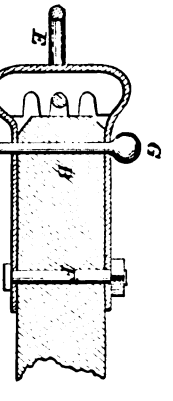

30815

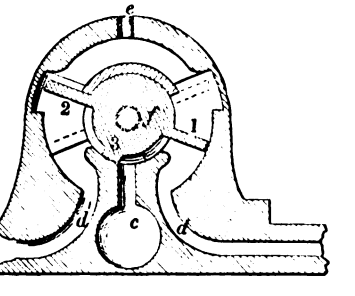

30816

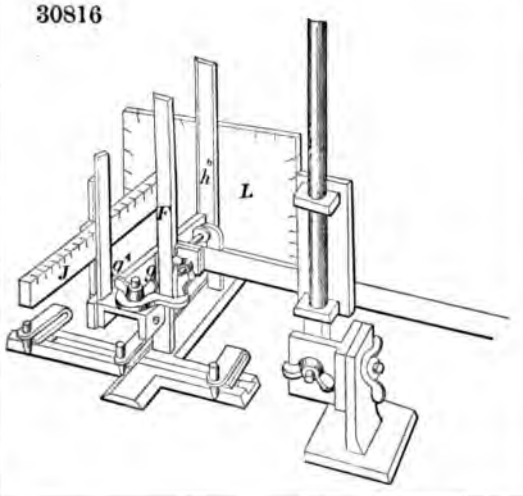

30818

30817

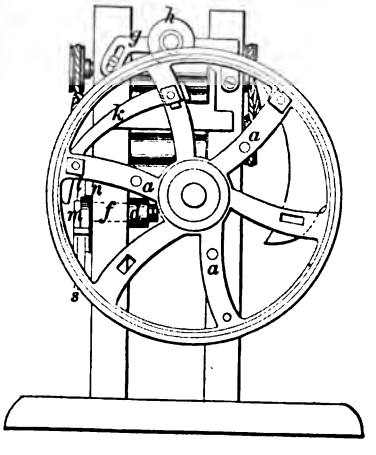

30819

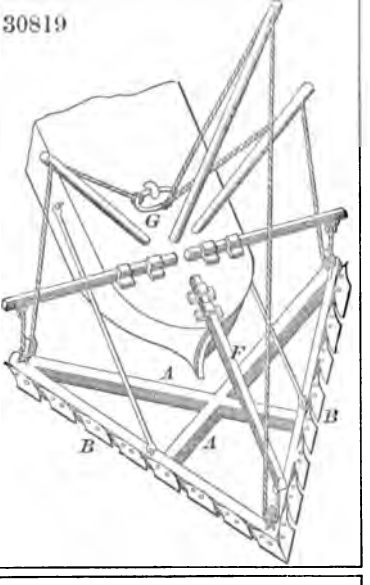

30820

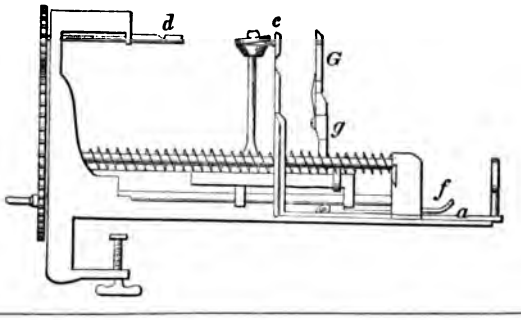

30821

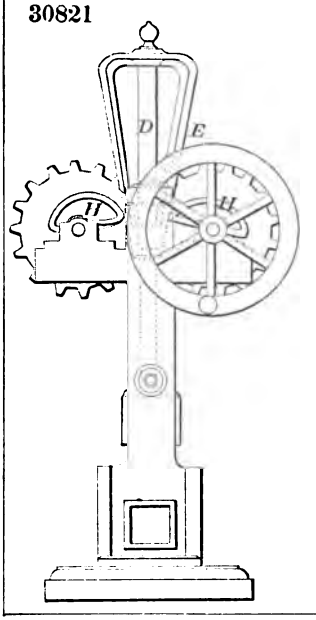

30822

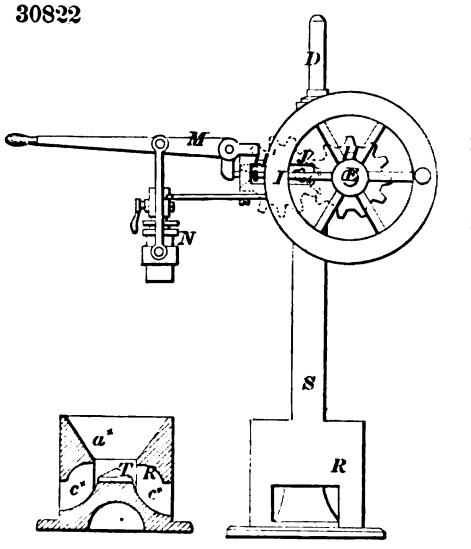

30823

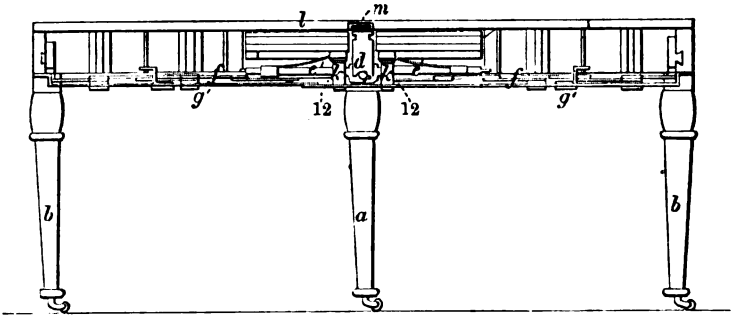

30824

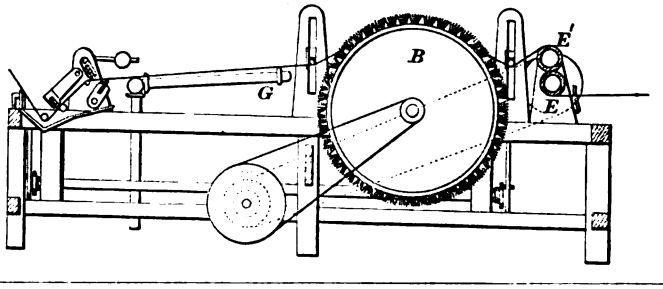

30825

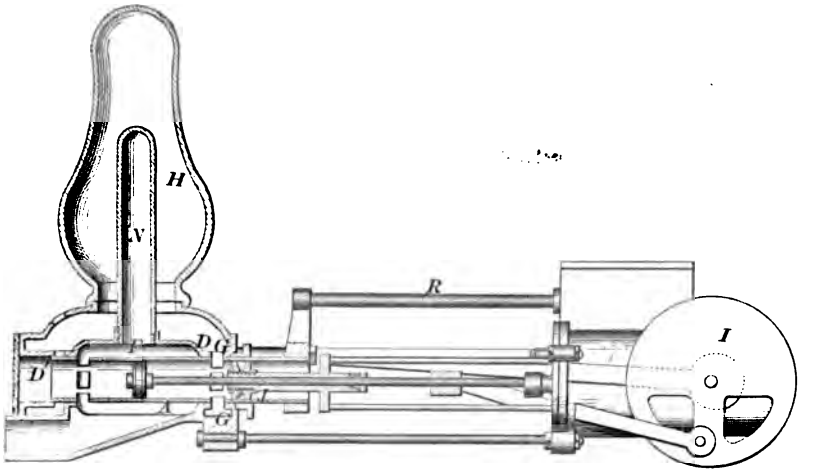

30826

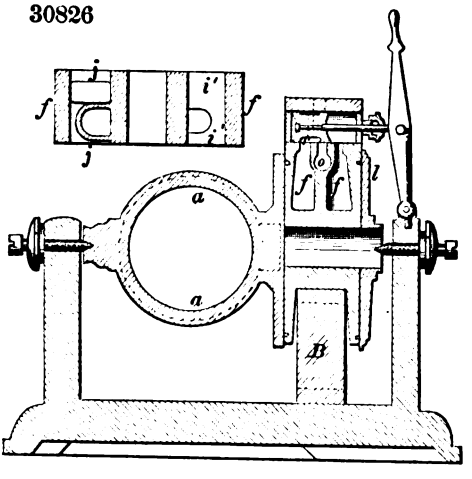

30827

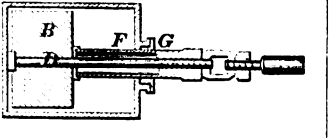

30828

30829

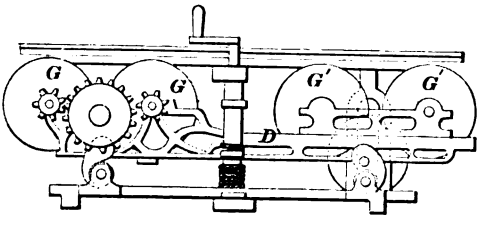

30830

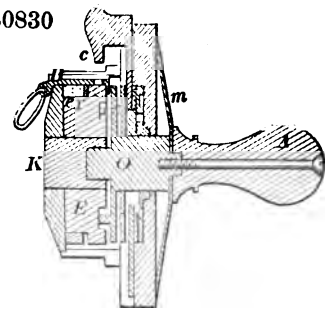

30831

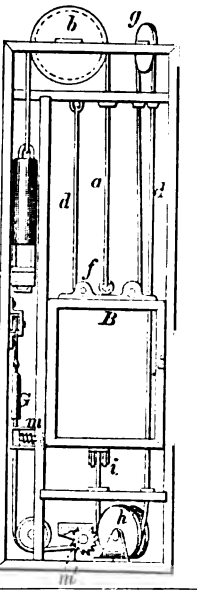

30832

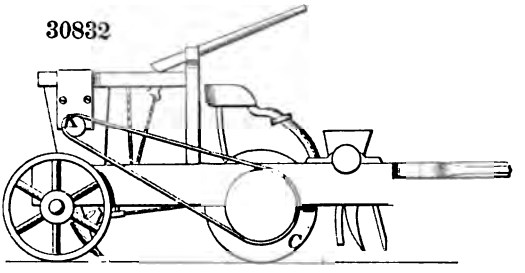

30833

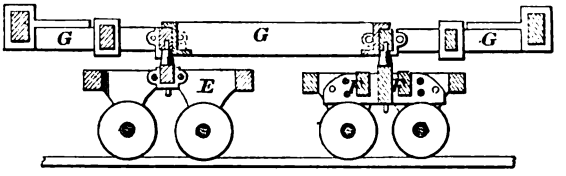

30835

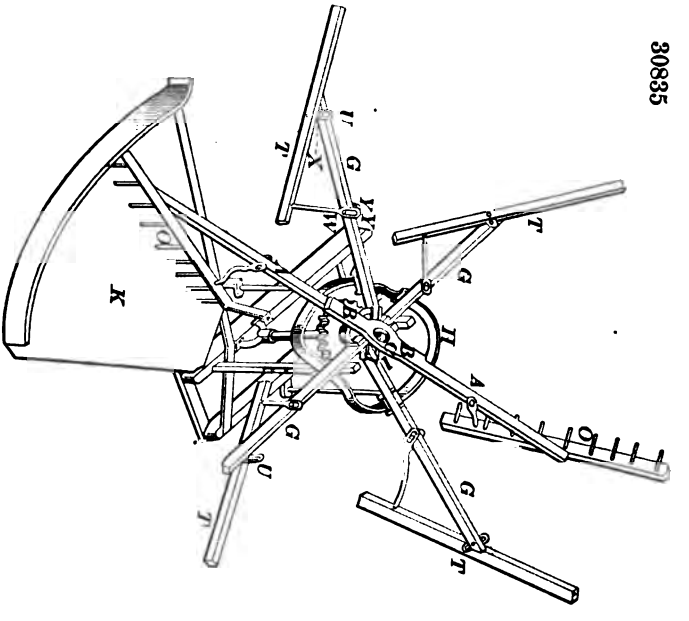

30836

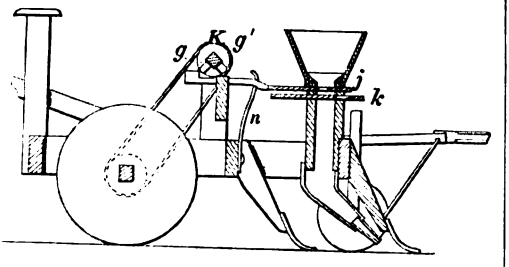

30838

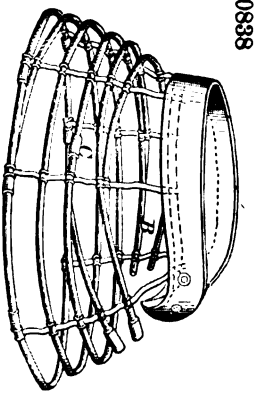

30837

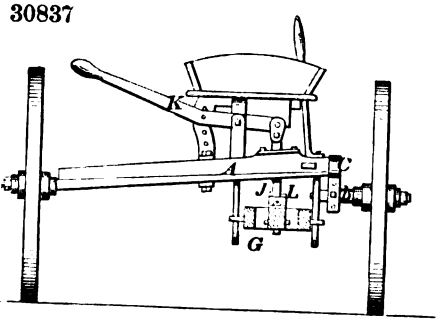

30839

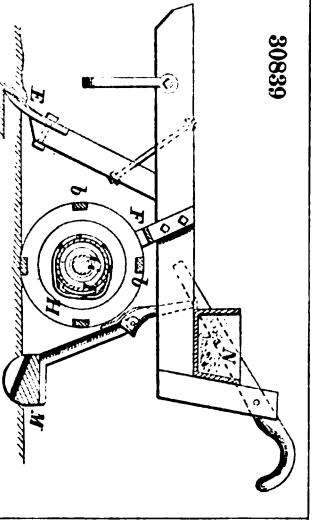

30840

30841

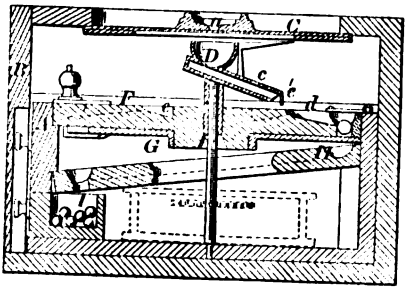

30842

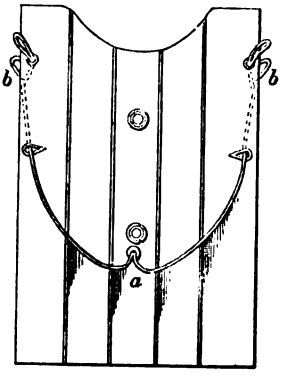

30843

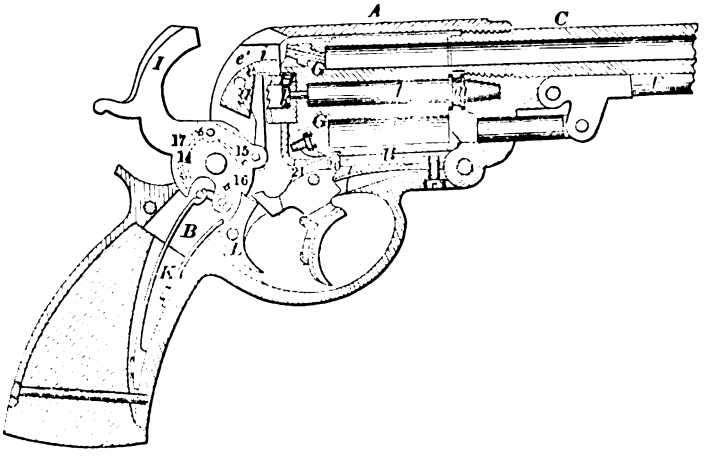

30844

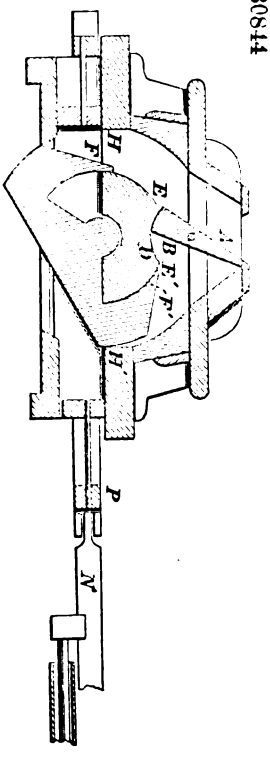

30845

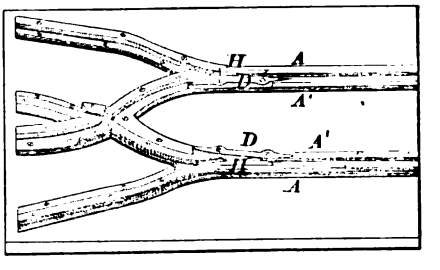

30846

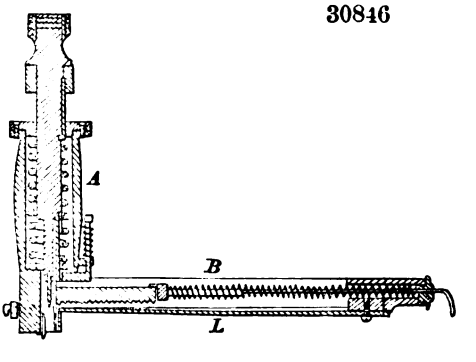

30848

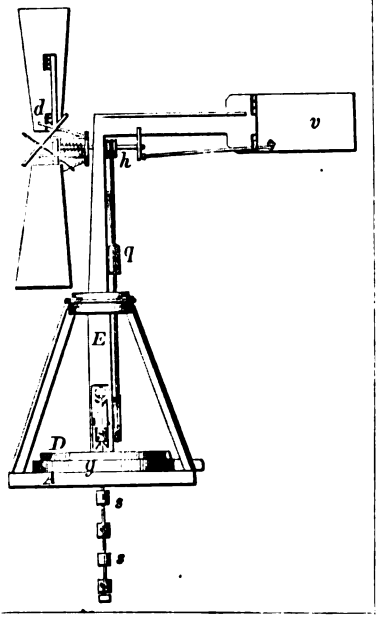

30849

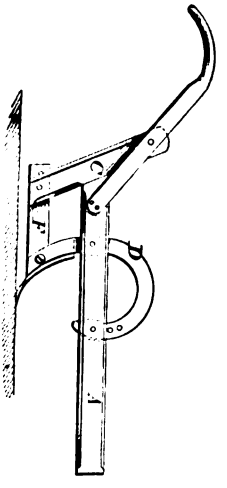

30852

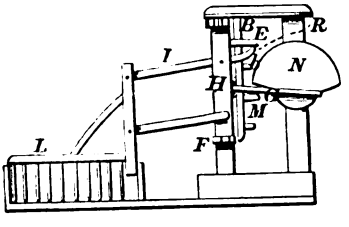

30850

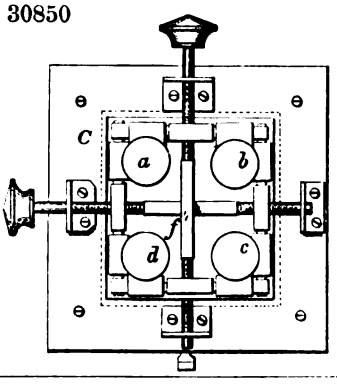

30851

30853

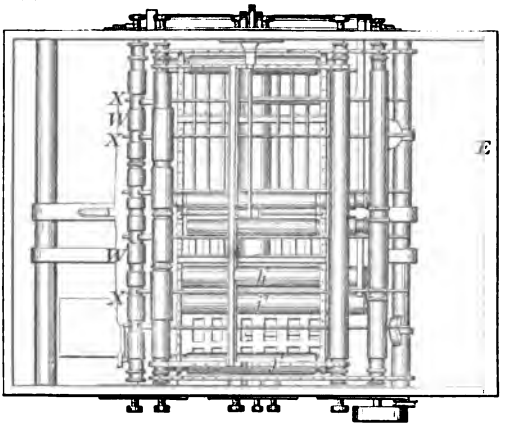

30855

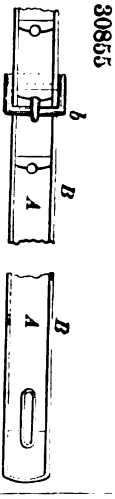

30854

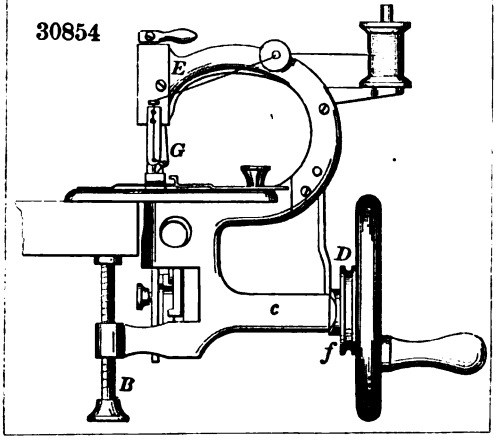

30856

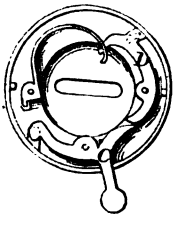

30857

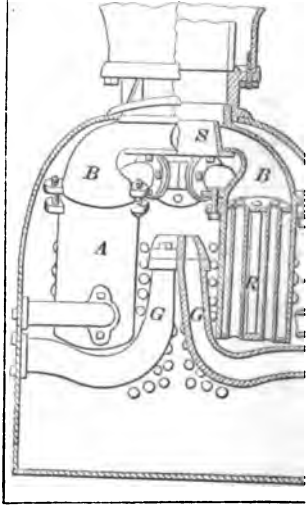

30858

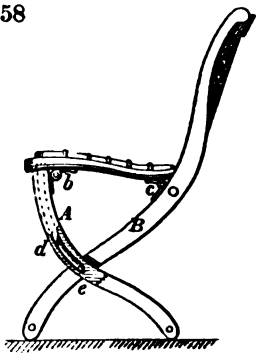

30860

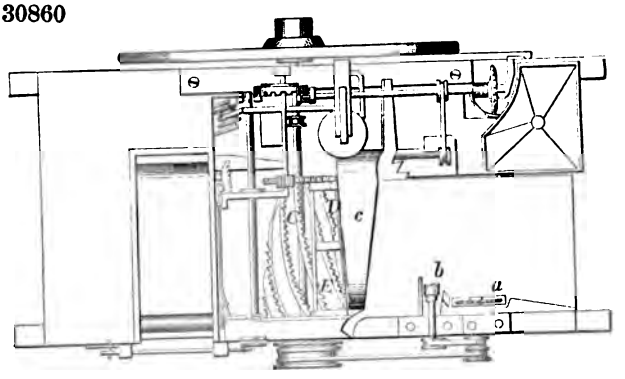

30859

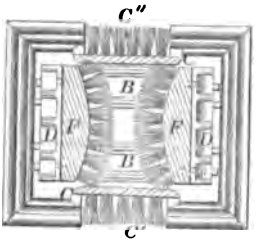

30861

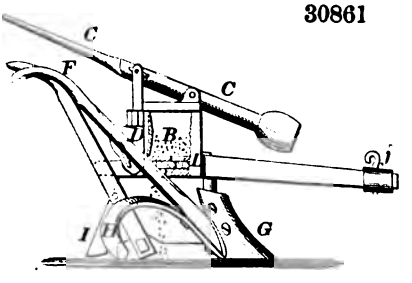

30862

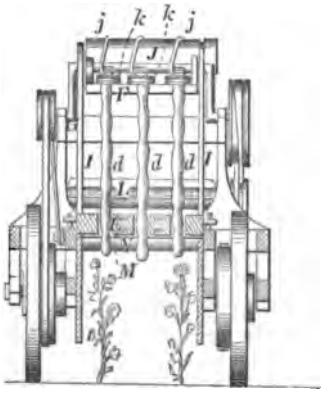

30863

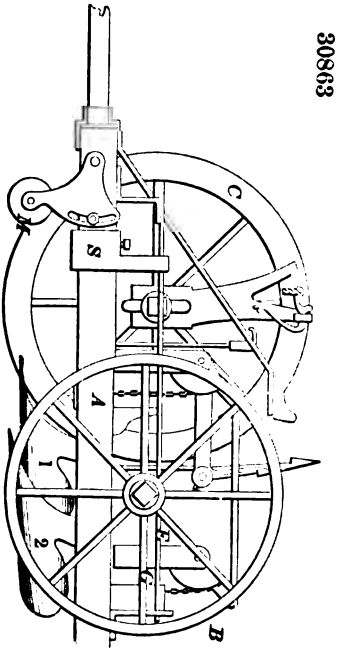

30864

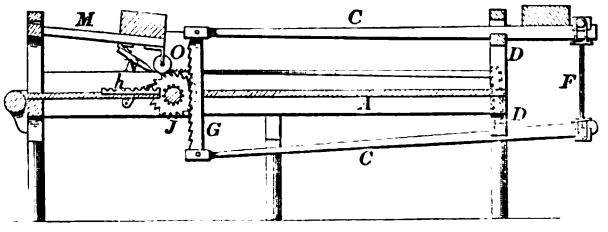

30865

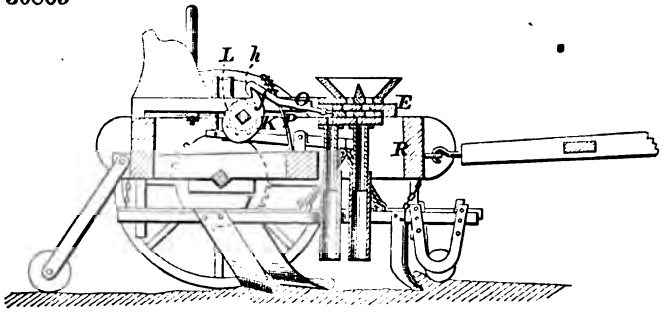

30866

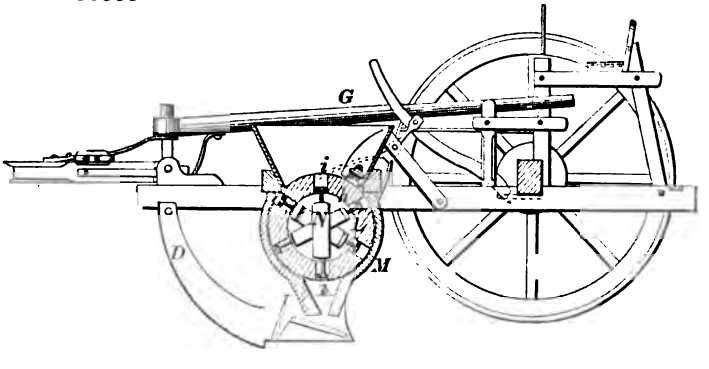

30867

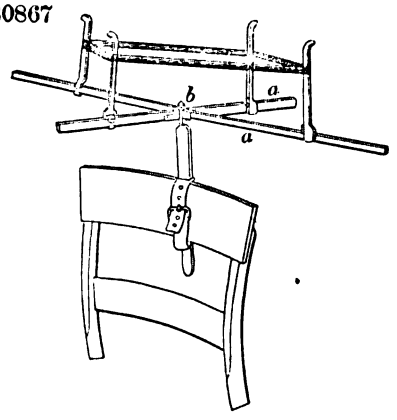

30868

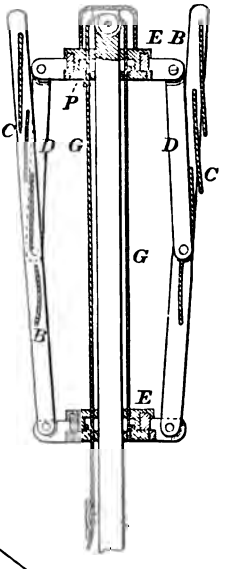

30869

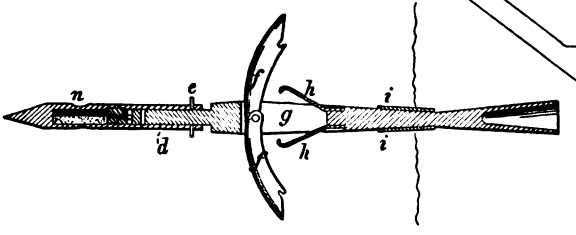

30870

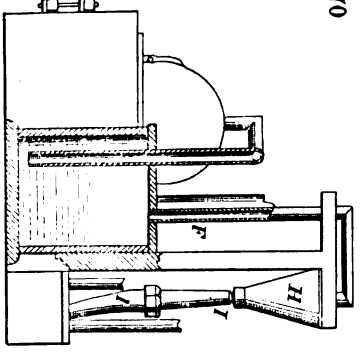

30871

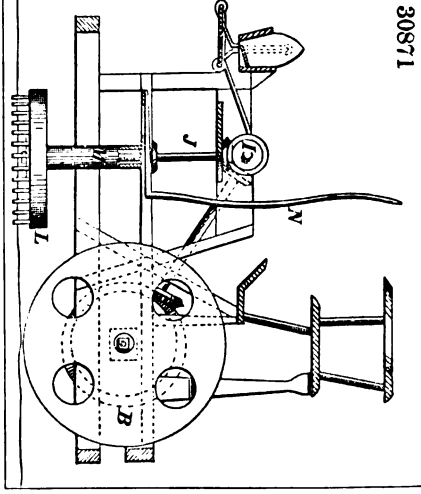

30872

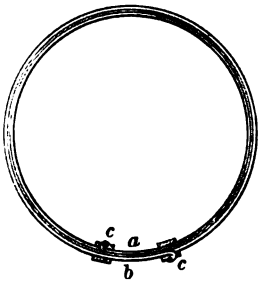

30873

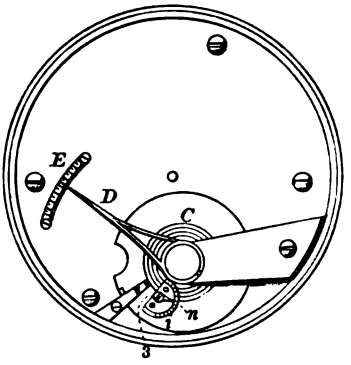

30874

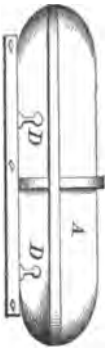

30875

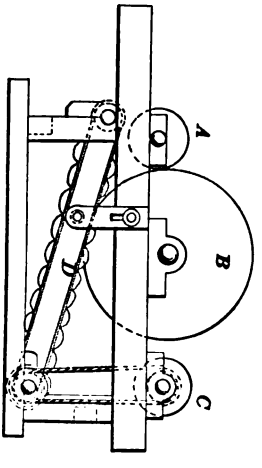

30876

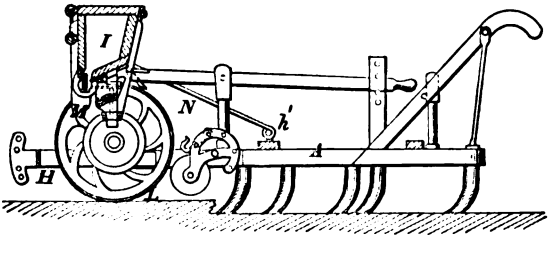

30877

Fig. 2

Fig. 1

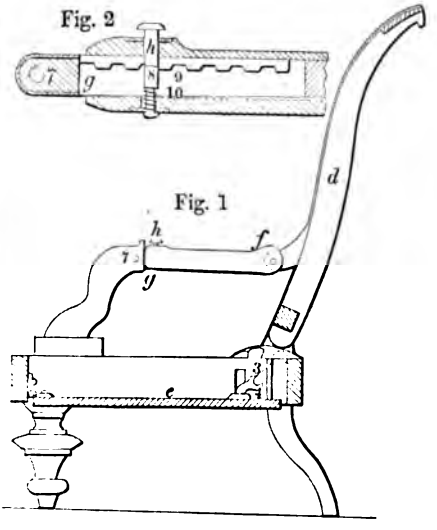

30878

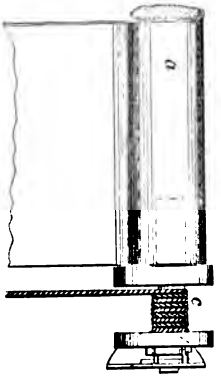

30880

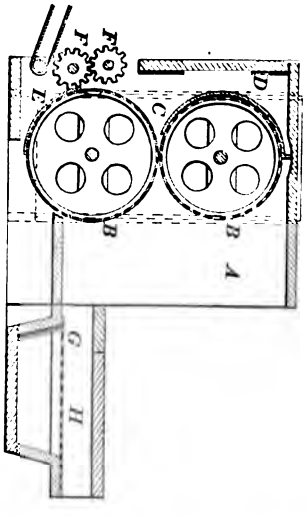

30881

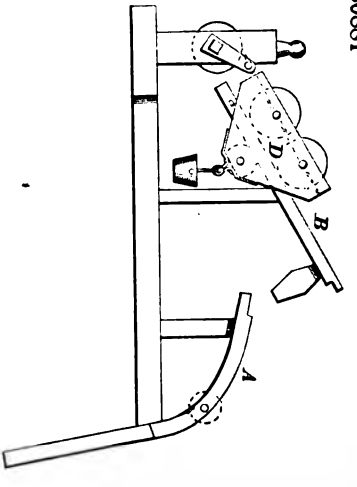

30882

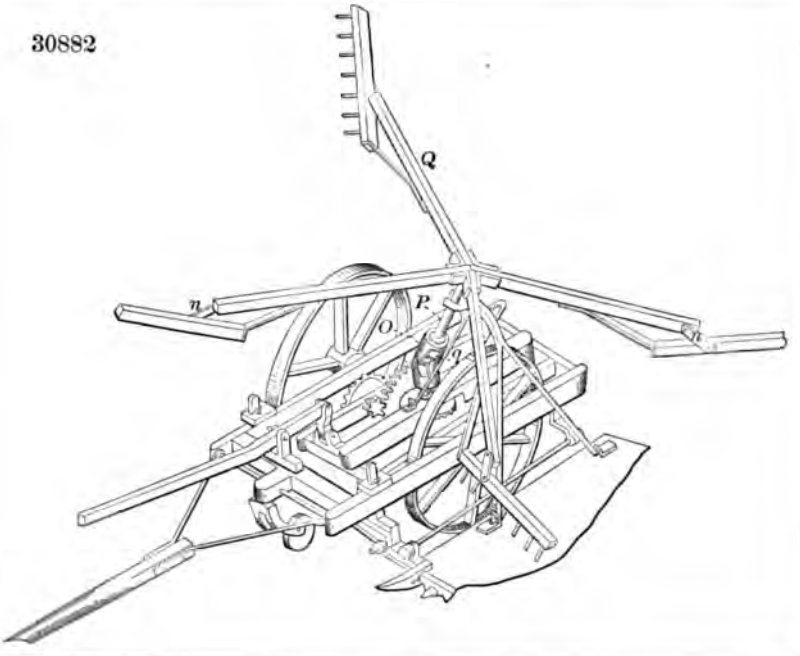

30883

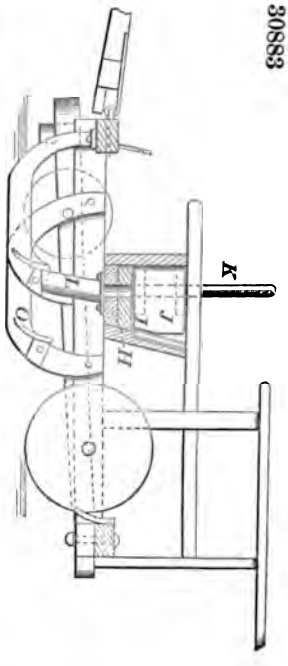

30884

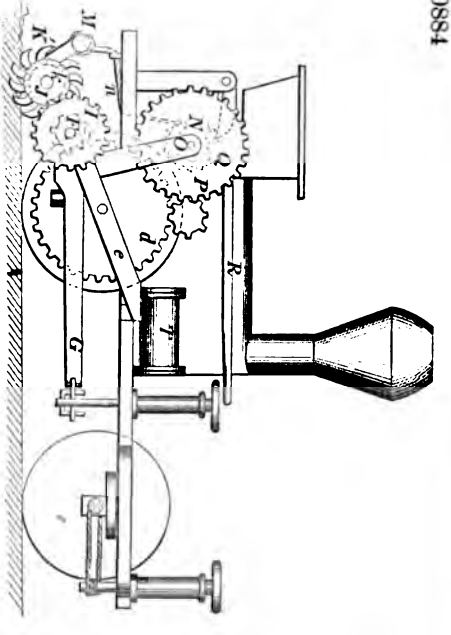

30885

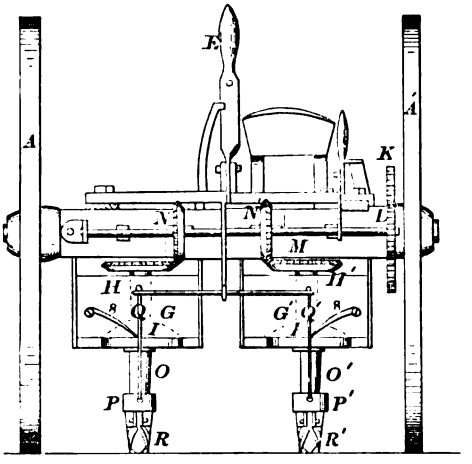

30886

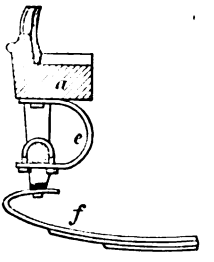

30887

Fig. 1

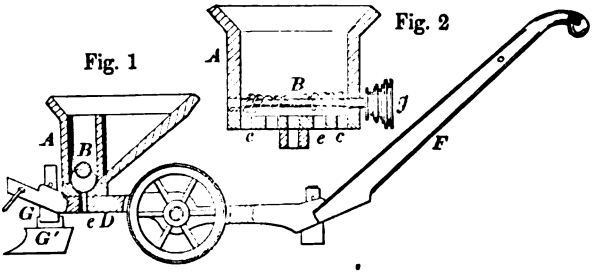

Fig. 2

30888

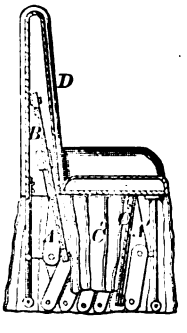

30889

Fig. 1

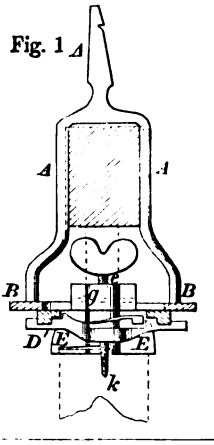

Fig. 2

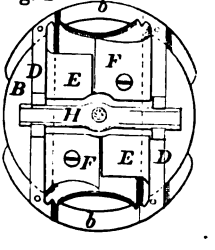

30890

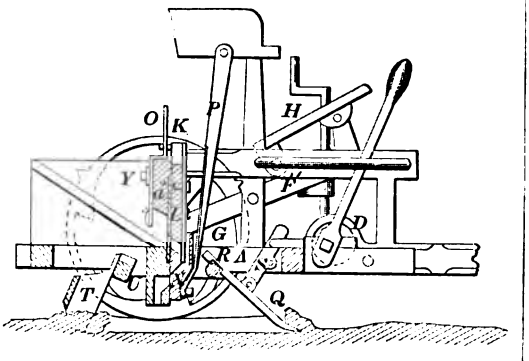

30892

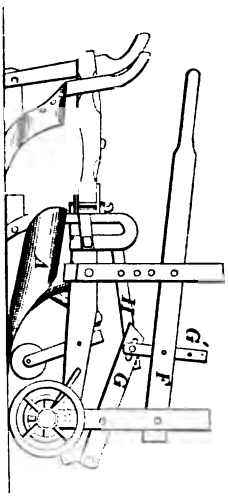

30891

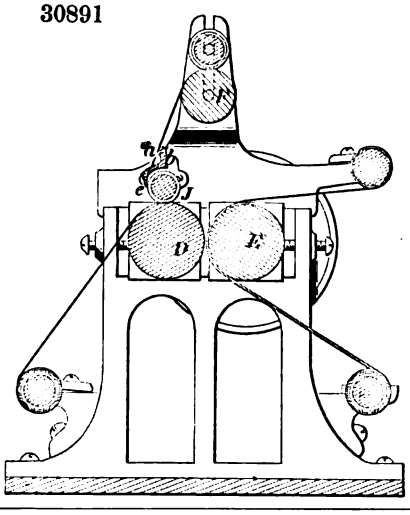

30893

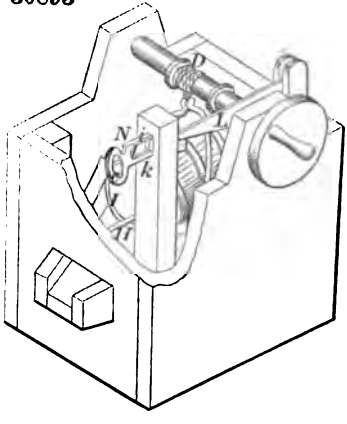

30894

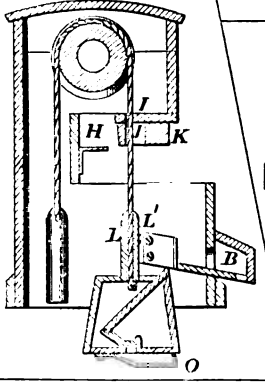

30895

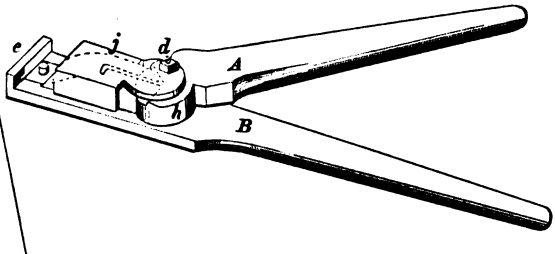

30896

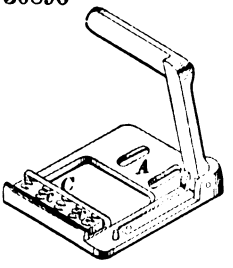

30897

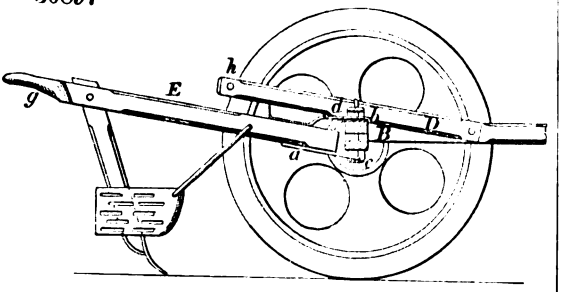

30898

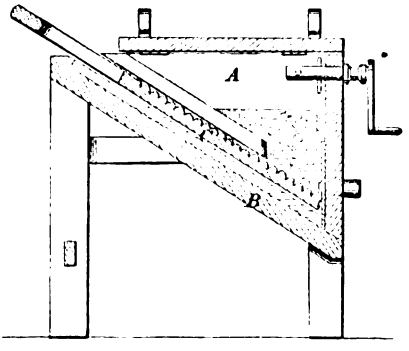

30899

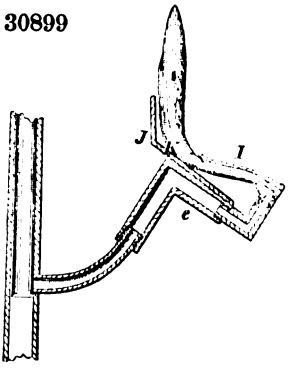

30900

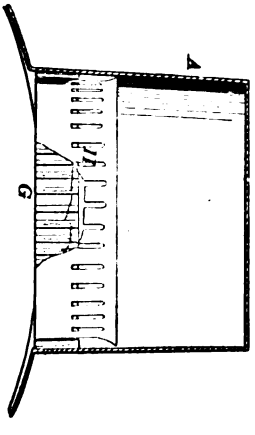

30901

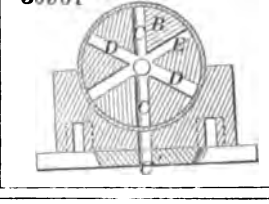

30902

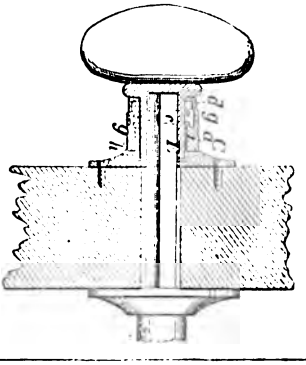

30903

Fig. 1

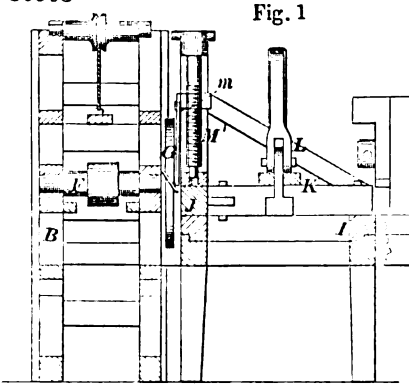

Fig. 2

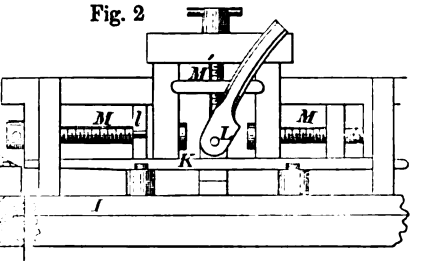

30904

Fig. 1

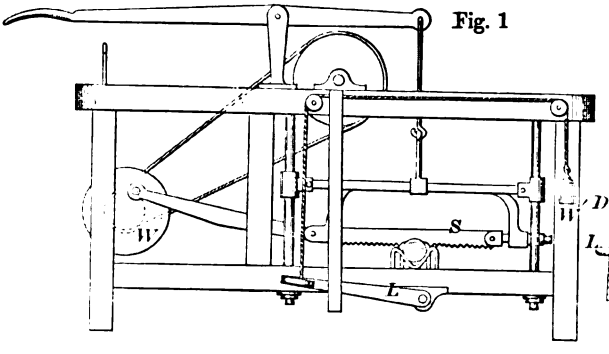

Fig. 2

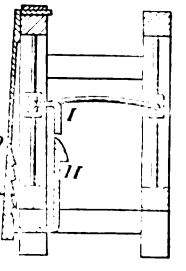

30905

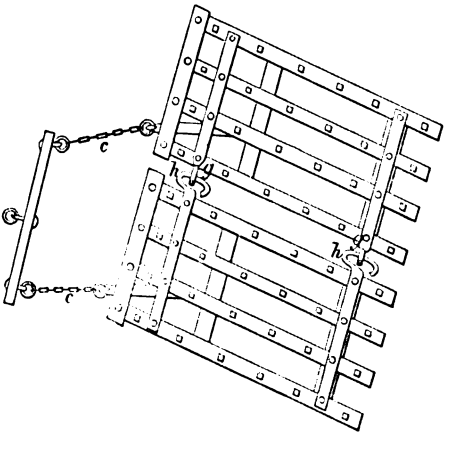

30906

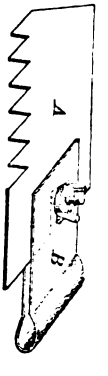

30907

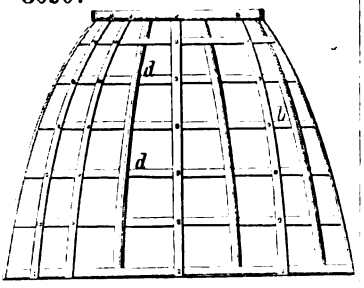

30908

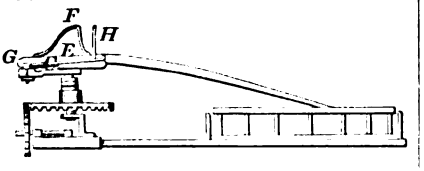

30909

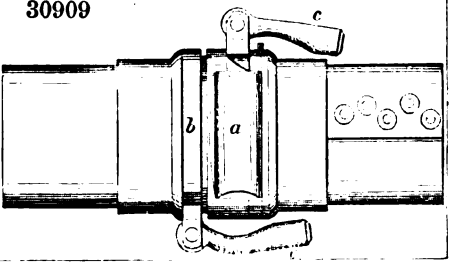

30910

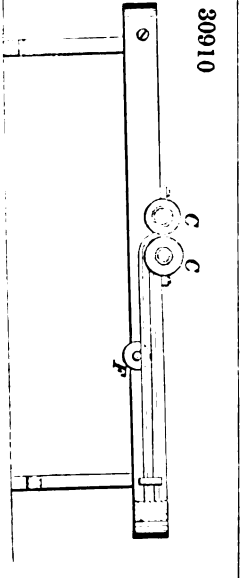

30912

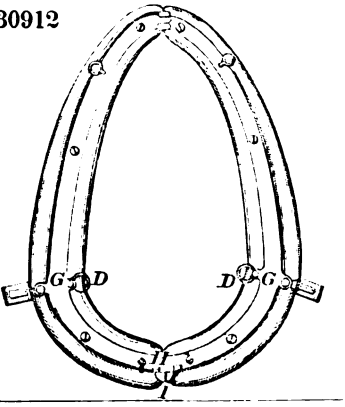

30911

30914

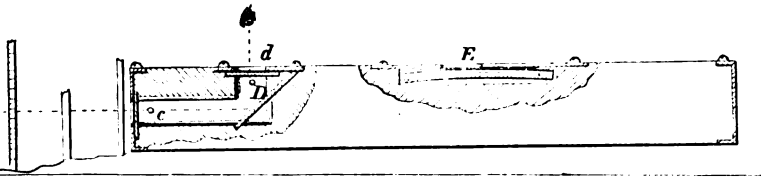

30913

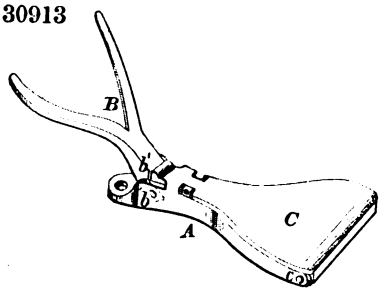

30915

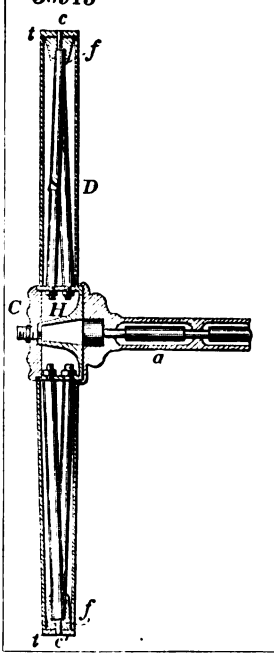

30916

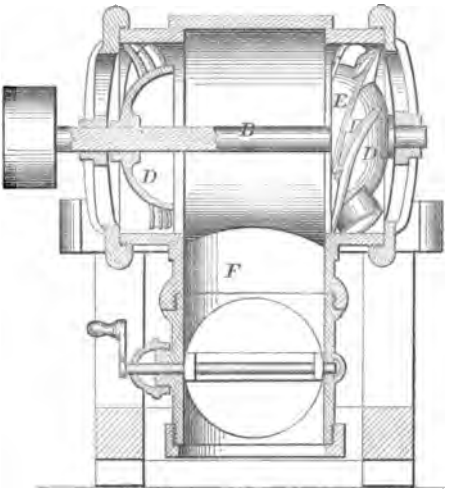

30918

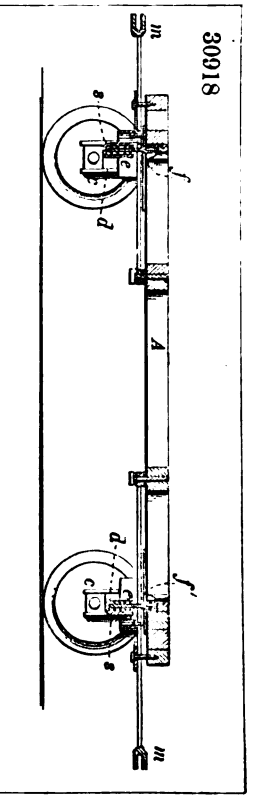

30917

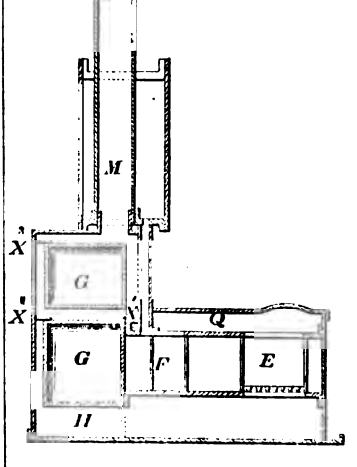

30920

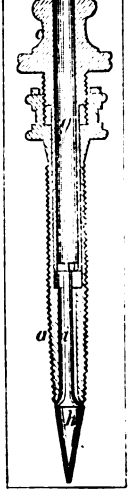

30921

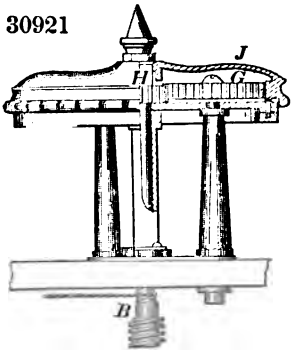

30923

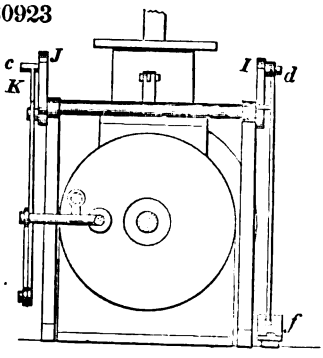

30922

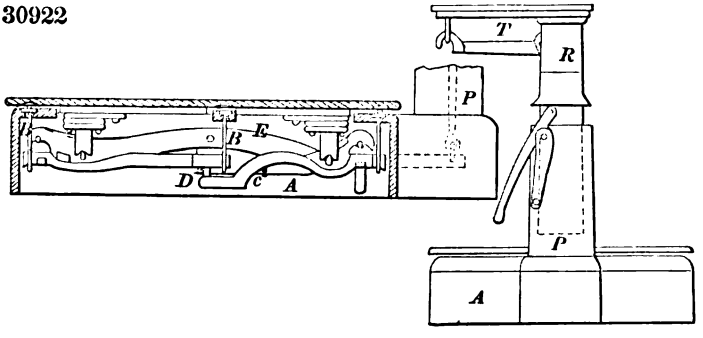

30924

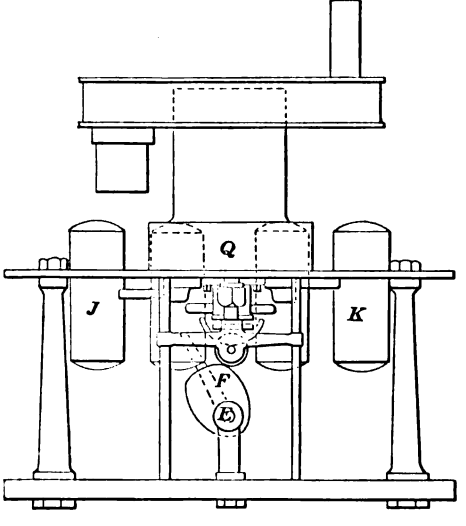

30925

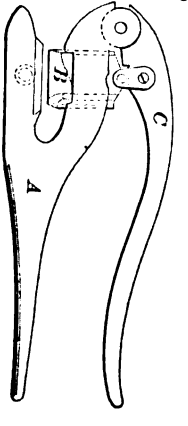

30926

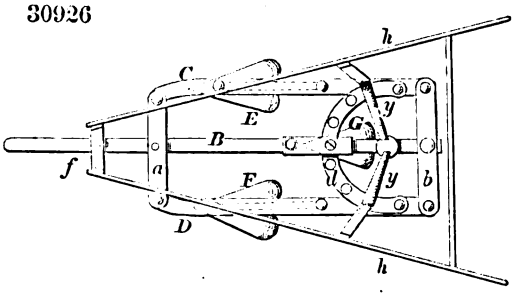

30927

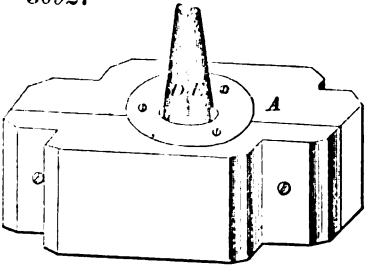

30928

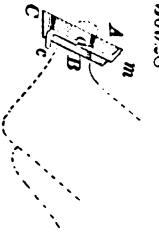

30929

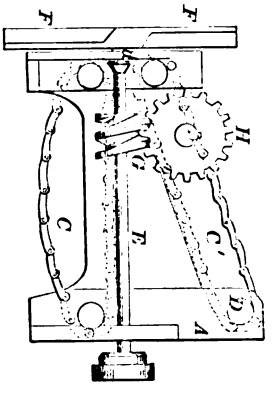

30930

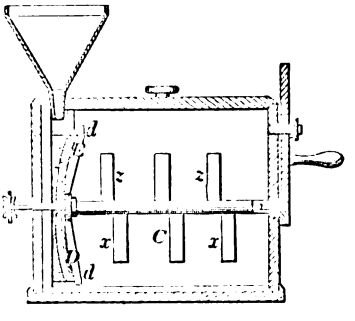

30931

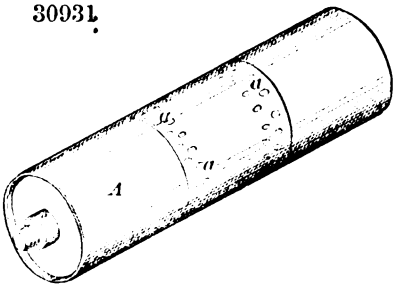

30932

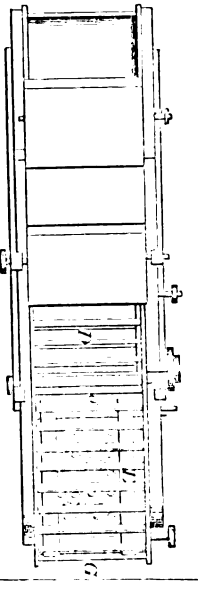

30933

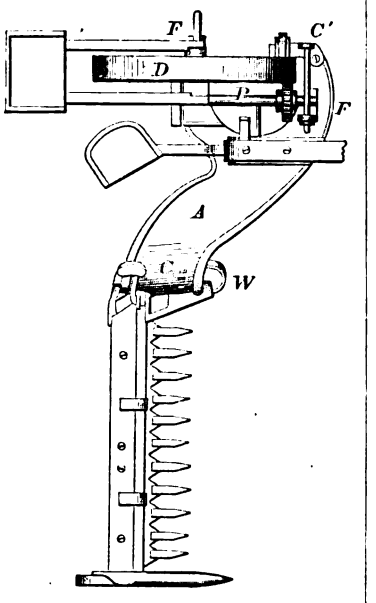

30934

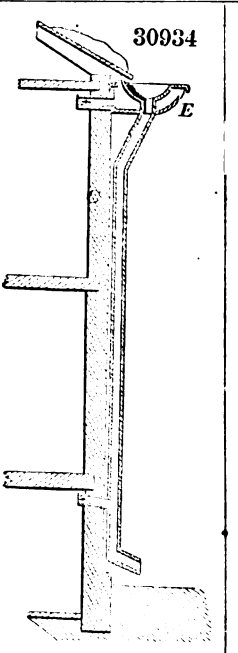

30935

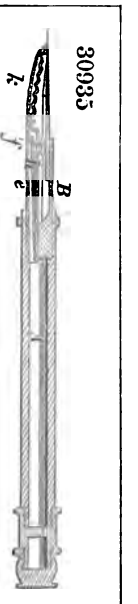

30936

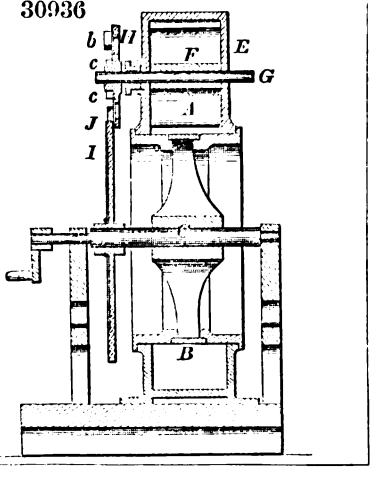

30938

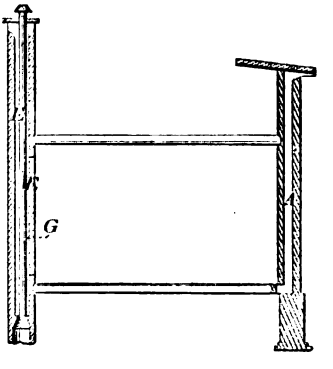

30937

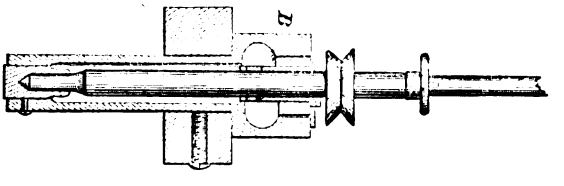

30939

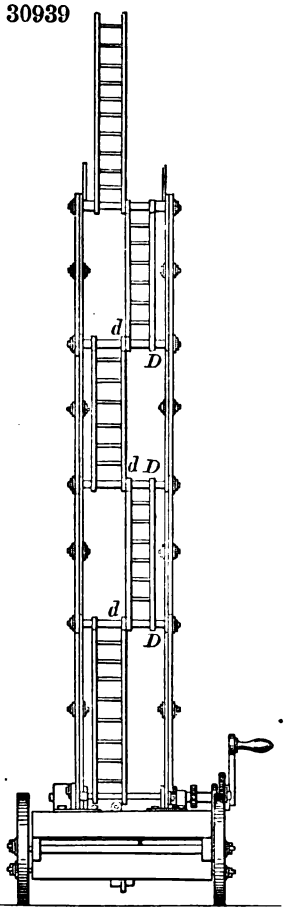

30940

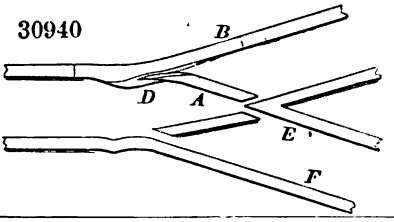

30941

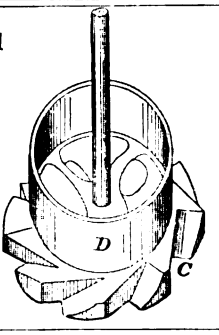

30942

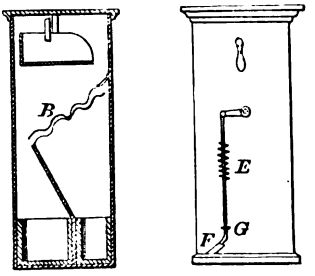

30943

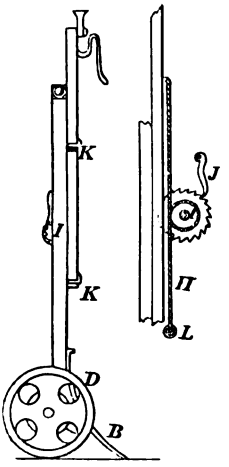

30944

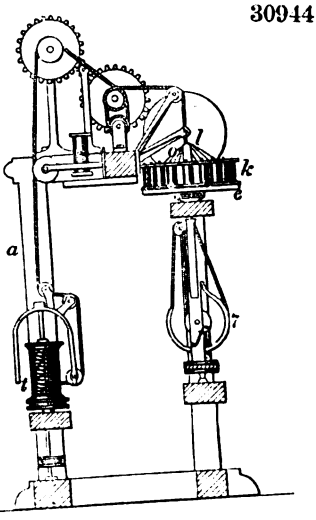

30946

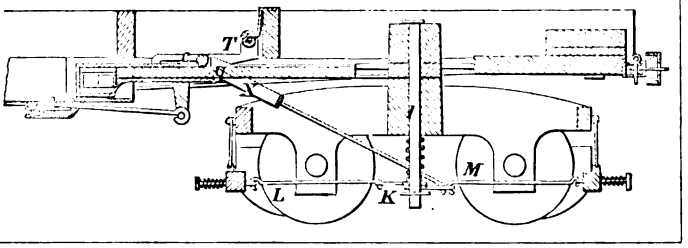

30949

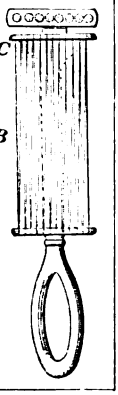

30947

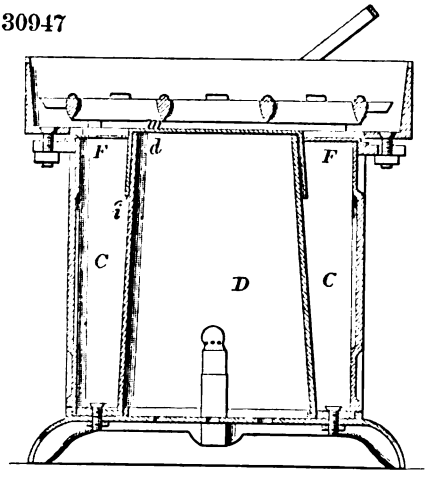

30951

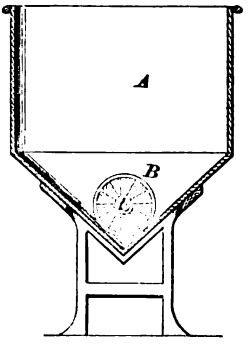

30950

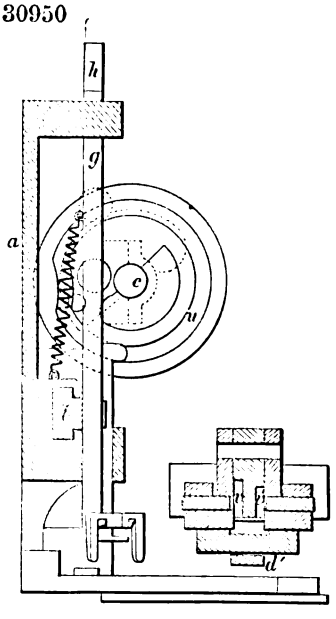

30948

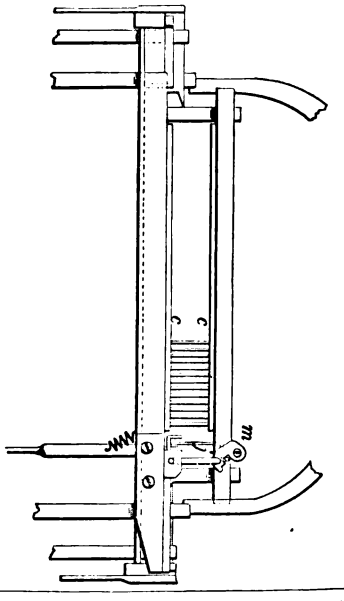

30952

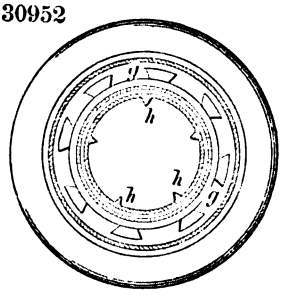

30953

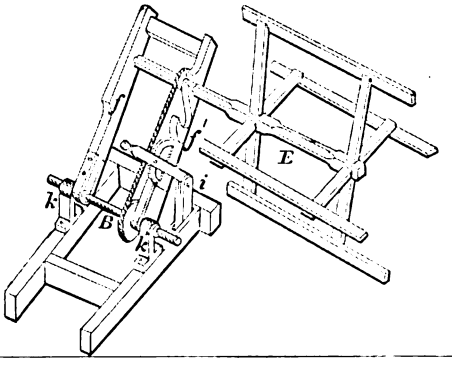

30954

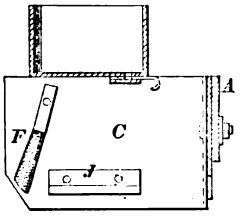

30957

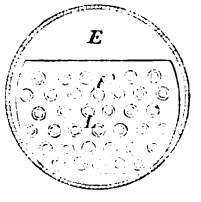

30955

Fig. 1

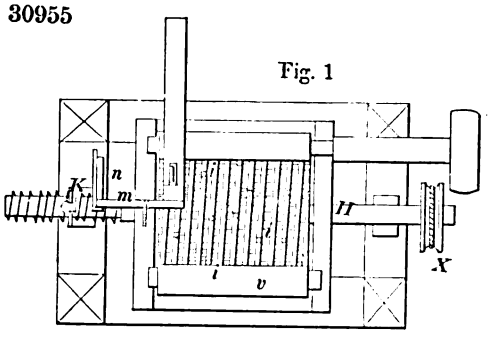

Fig. 2

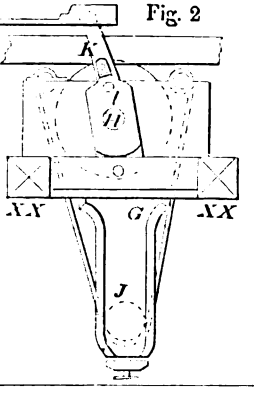

30956

Fig. 2

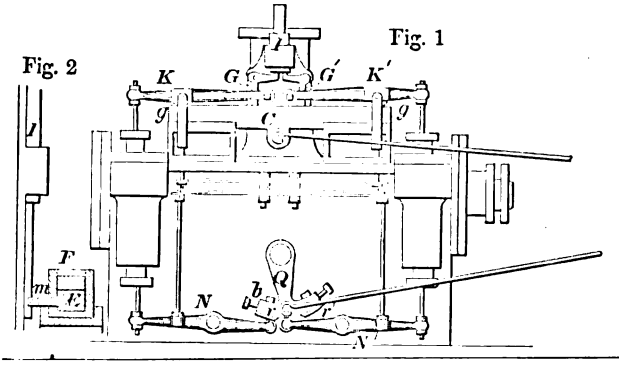

Fig. 1

30958

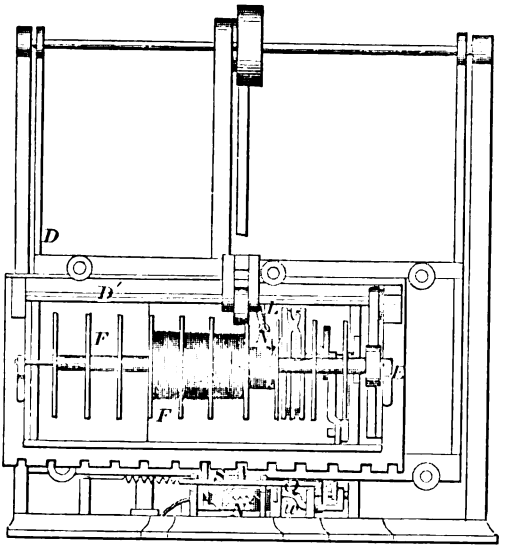

30960

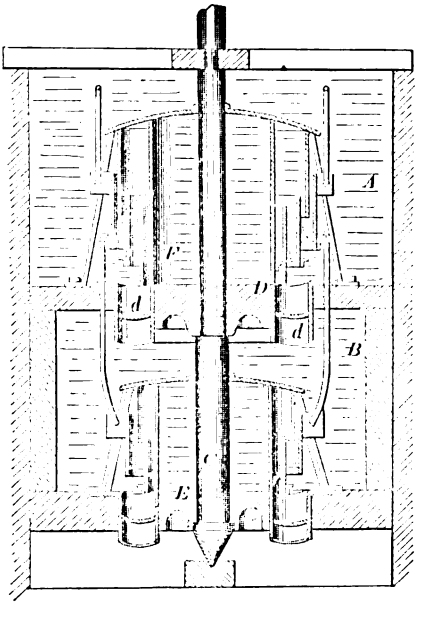

30959

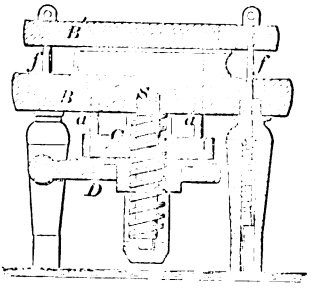

30961

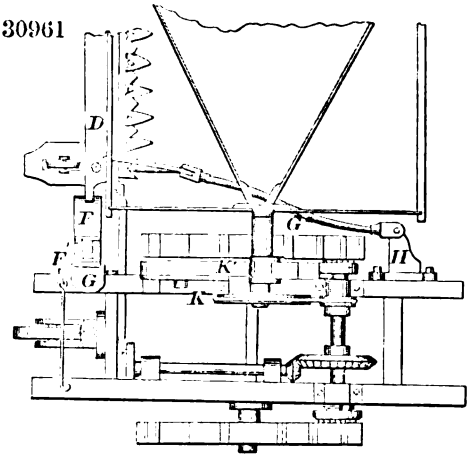

30962

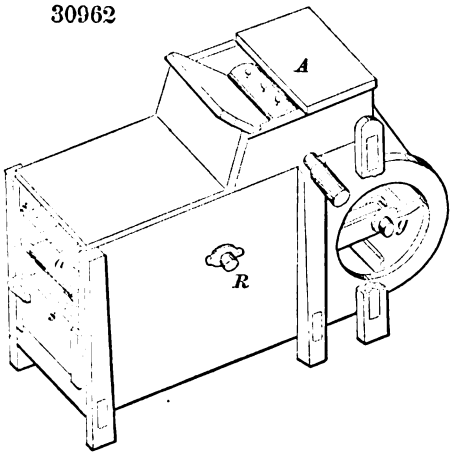

30963

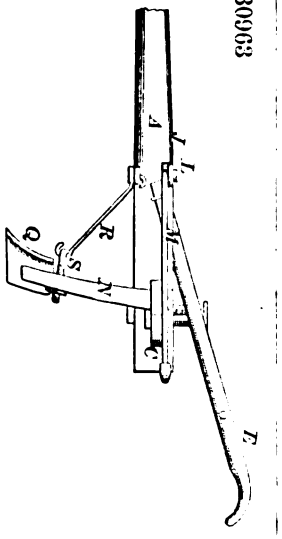

30964

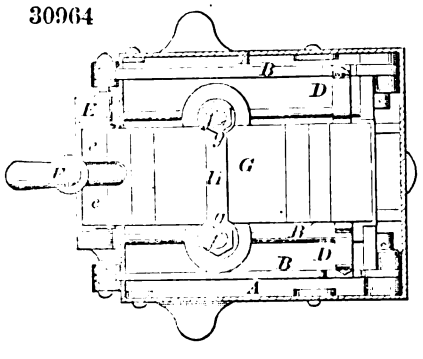

30965

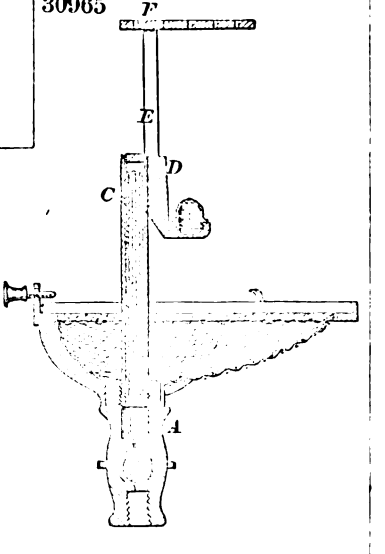

30966

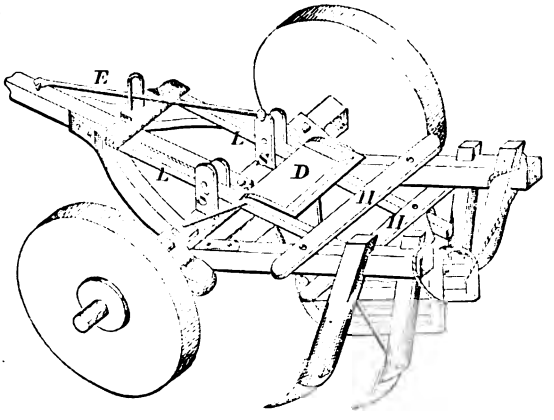

30967

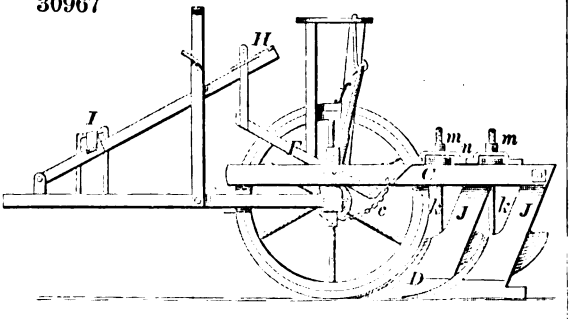

30968

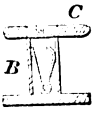

30969

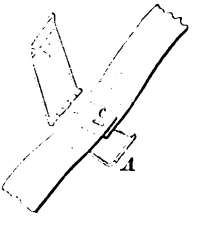

30970

30971

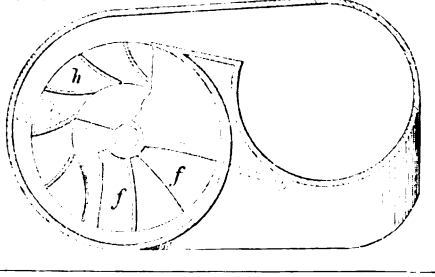

30972

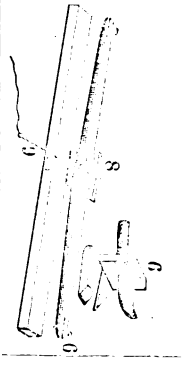

30973

30976

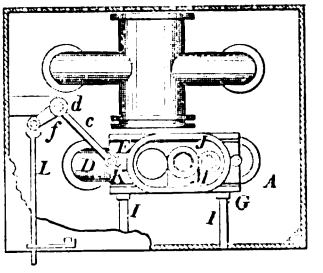

30975

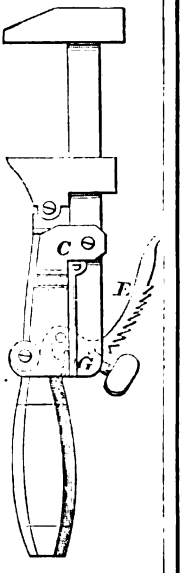

30974

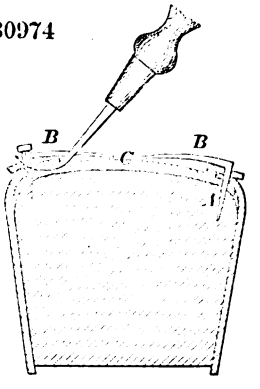

30977

30978

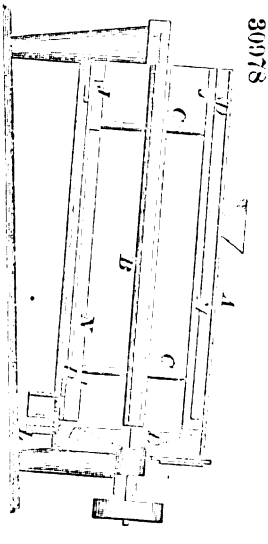

30979

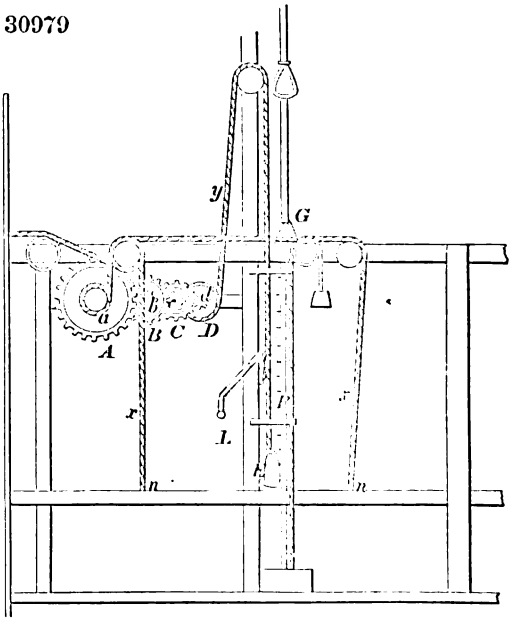

30980

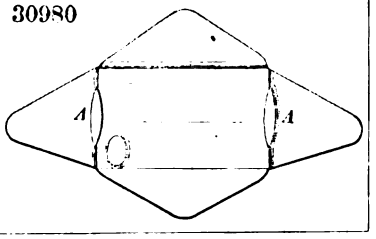

30981

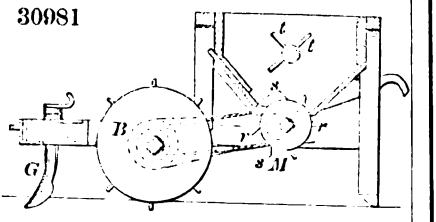

30982

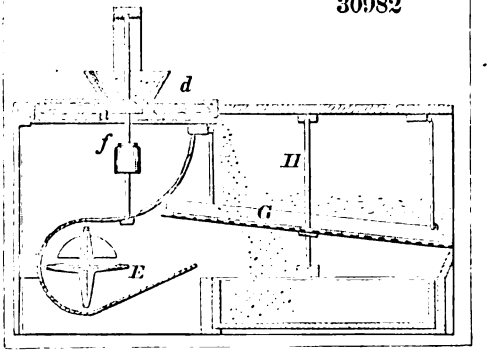

30983

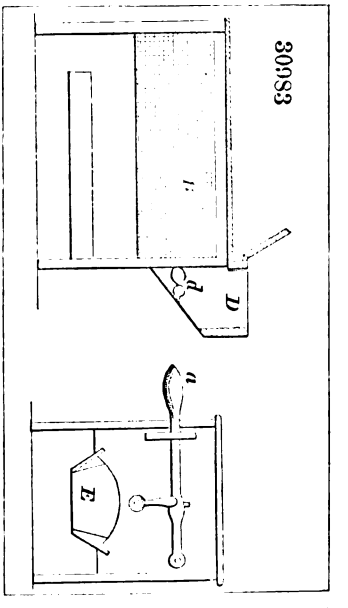

30984

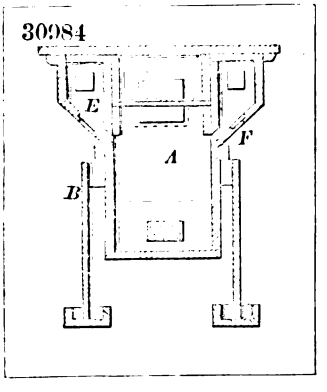

30985

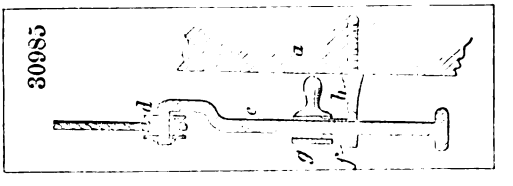

30986

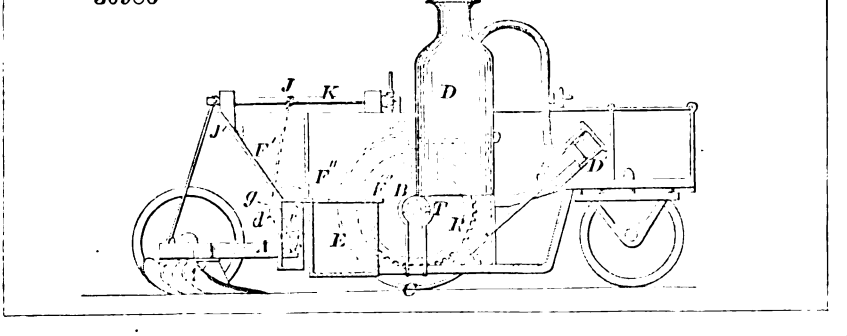

30987

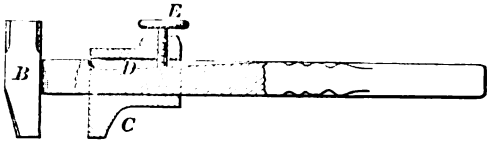

30988

30989

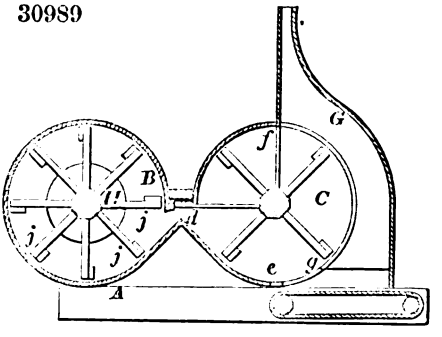

30990

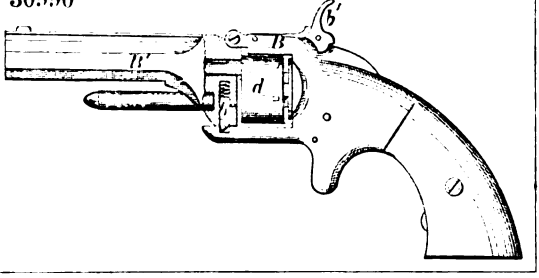

30991

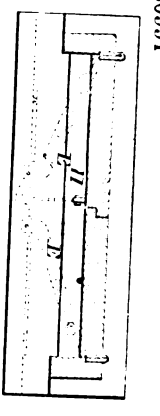

30992

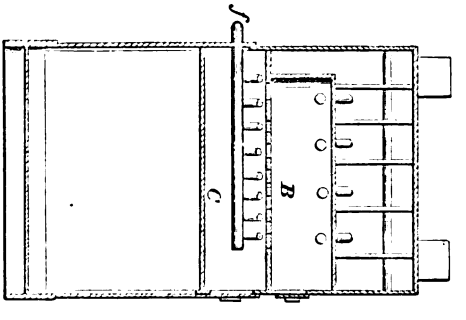

30993

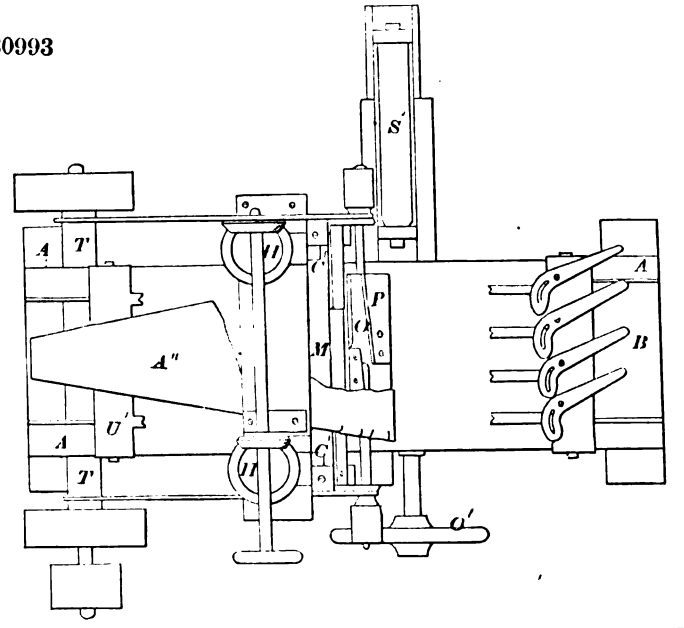

30994

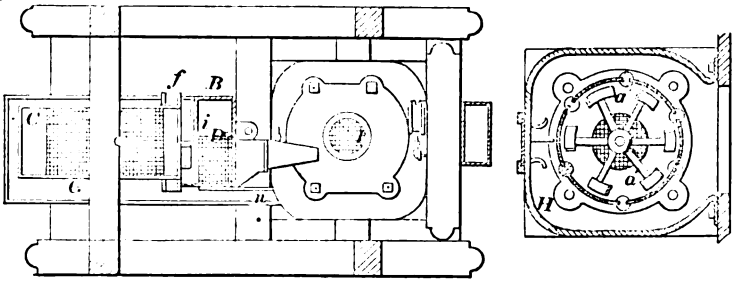

30995

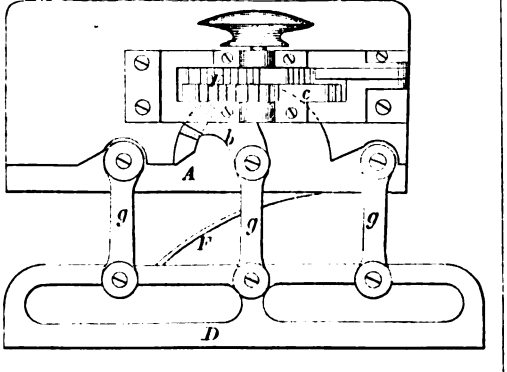

30996

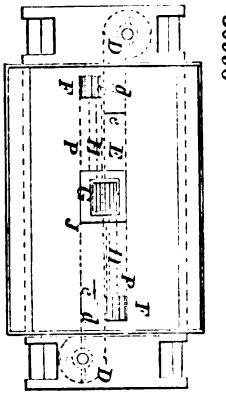

30997

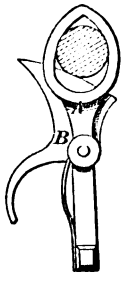

30998

Fig. 1

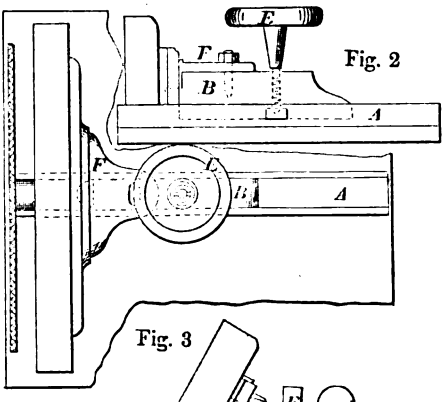

Fig. 2

Fig. 3

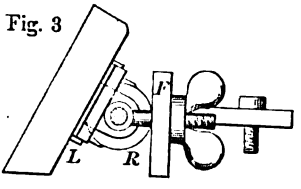

31000

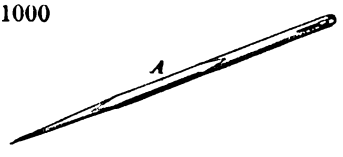

30999

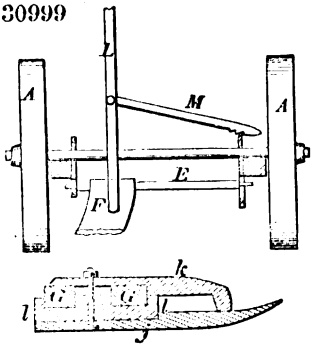

31001

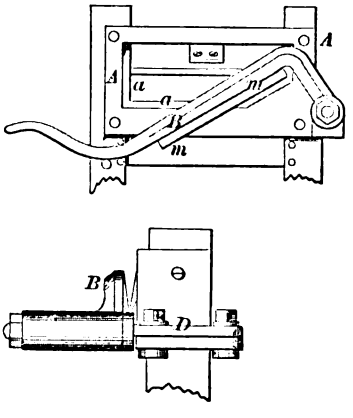

31002

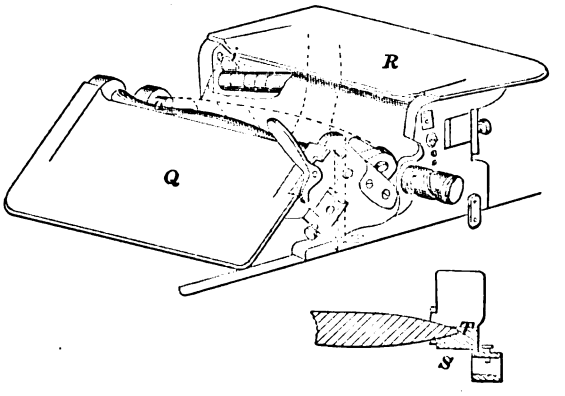

31003

31004

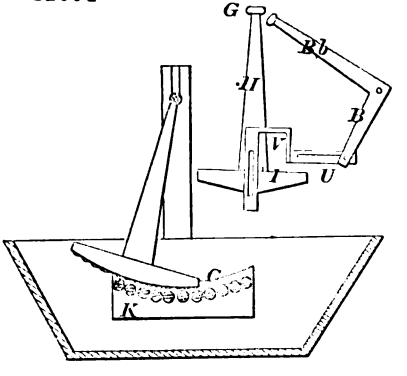

277

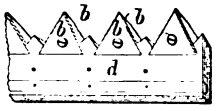

278

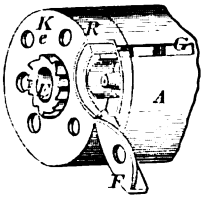

279

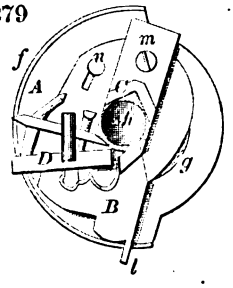

280

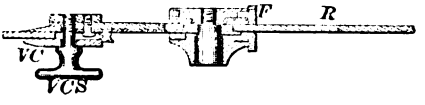

281

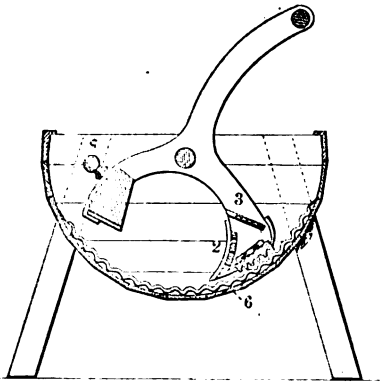

282

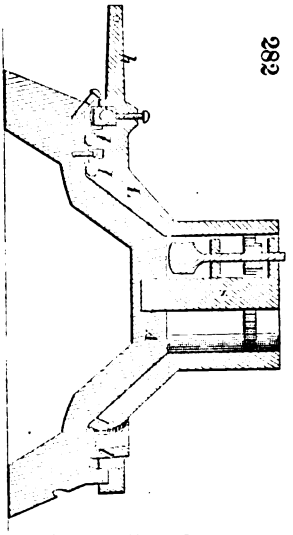

283

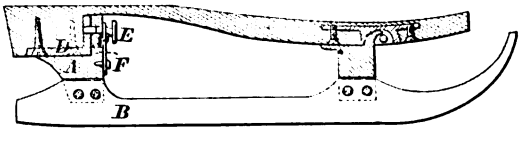

284

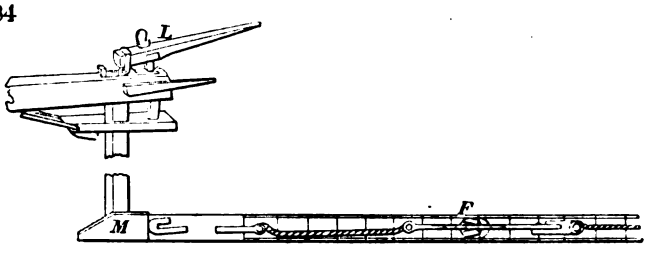

285

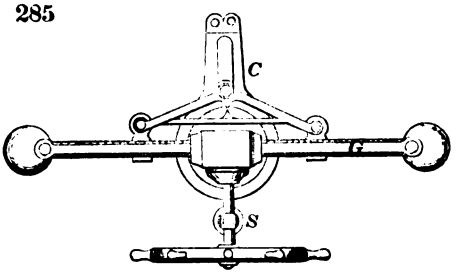

286

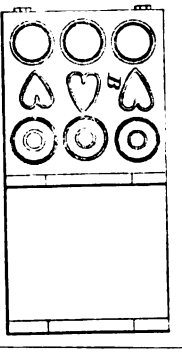

287

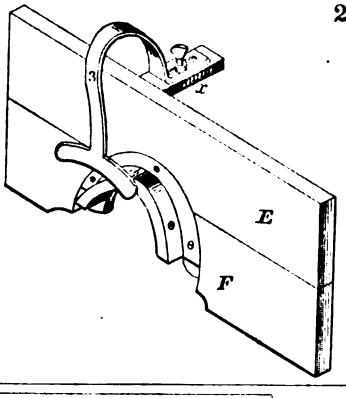

288

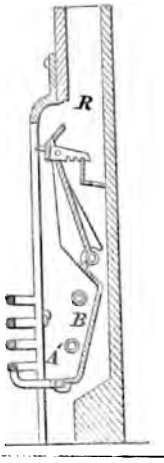

289

290

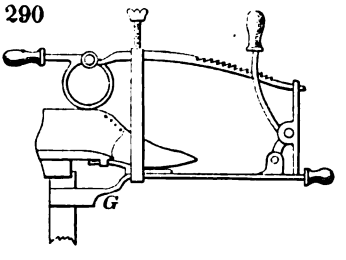

291

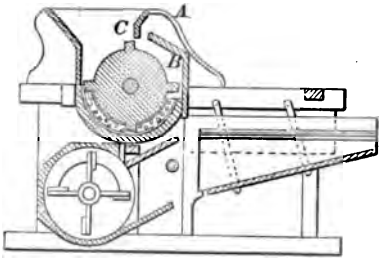

292

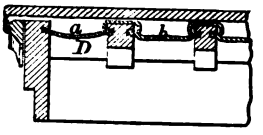

293

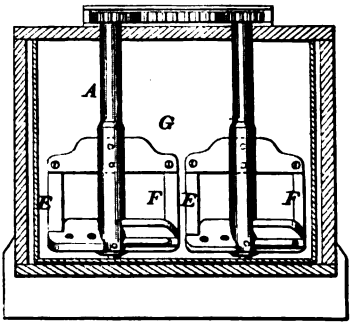

294

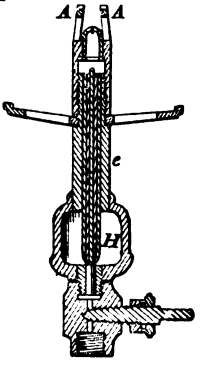

295

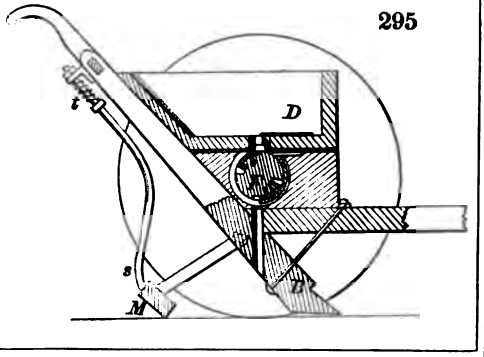

296

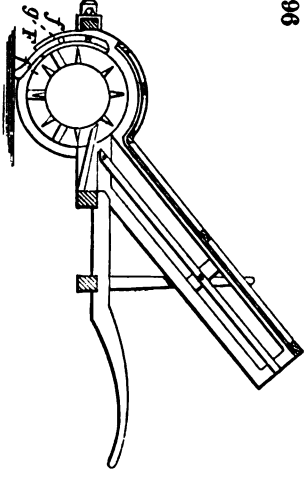

297

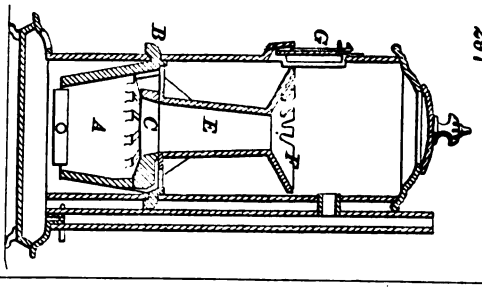

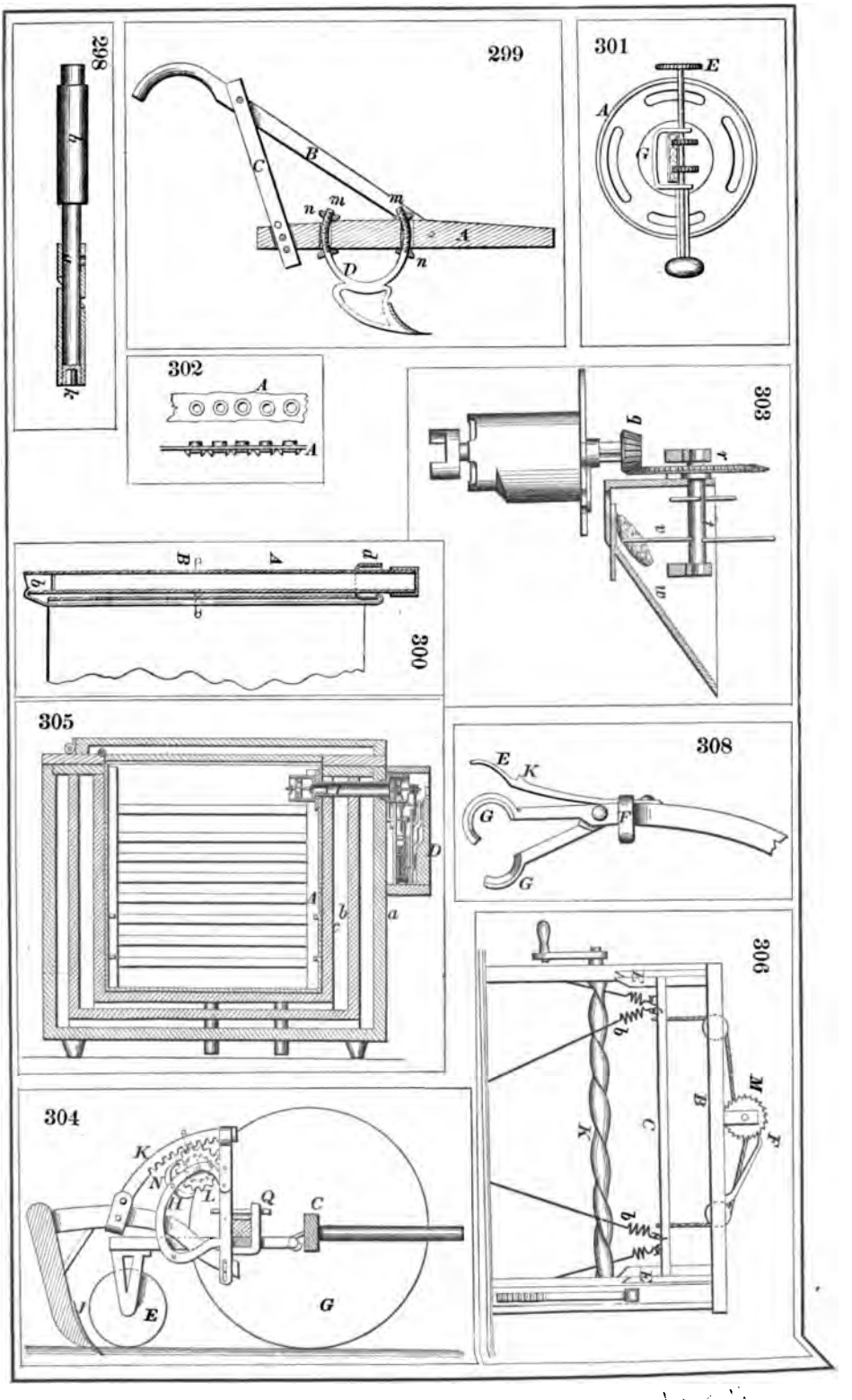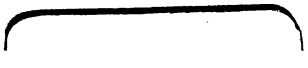
298
299
301
302
303
300
305
308
306
304